470 Beauty Spot Rd. E
Bennettsville, SC 29512

SUBMITTAL SHEET
THERMAZONE THIN SERIES
INDUSTRIAL/COMMERCIAL/ RESIDENTIAL INFRARED HEATER

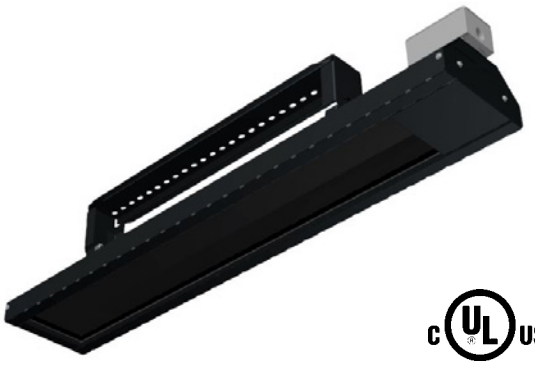

CAPACITIES
1091W to 4322W, 120–240V, 1Ø or 3Ø **Element Type**: Flat Panel Emitter **Reflection Angles**: 60° Symmetrical **Mounting Types**: Brackets included for ceiling mount and wall mount. Can also be hung by chain or threaded rod.

See Selection Chart for all Options

JOB NAME: _____

LOCATION: _____

ARCHITECT: _____

ENGINEER: _____

CONTRACTOR: _____

SUBMITTED BY: _____ DATE: _____

TAG/ITEM	QTY.	CATALOG NUMBER	HEATER			AMPS	REFLECTION ANGLE	FINISH	MOUNTING
			KW	VOLTS	Ø				

ACCESSORIES AND CONTROLS	TAG/ITEM	QTY.	CATALOG NUMBER	DESCRIPTION

SUBMITTED BY:	DATE

APPROVED BY:	DATE

THERMAZONE THIN SERIES – **INDUSTRIAL/COMMERCIAL/RESIDENTIAL INFRARED HEATER**

ARCHITECT'S AND ENGINEER'S SPECIFICATIONS*

The Thermazone electric infrared heater(s) shall be supplied QMark,® a Marley Engineered Products® Brand, Bennettsville, SC, USA, and shall be of the kW rating, voltage and phase specified in the schedule. They shall be radiant type, and certified to cULus listed under standard 2021.

HEATING ASSEMBLY: The heating assembly shall be cULus listed under standard 2021 and shall consist of single stranded, non-coiled Ni-Chrome wire embedded in vitrified ceramic fiber and backed with high density, low biopersistent Fiberfrax insulation. The emitting surface is covered with a black-coated high temperature fiberglass cloth.

WIRING: For connection to the power supply, Thermazone heaters will include an indoor/outdoor rate j-box mounted to the heater's raceway.

CONSTRUCTION: The heaters are formed and fastened together out of 16 ga. and 20 ga. CRS or stainless steel. If CRS, the heater must be powder coated with a high temp black finish. Unit may include a Stainless Steel grid on the face of the heater.

MOUNTING: The heater shall be provided with a mounting kit designed to bear the weight of the heater assembly. The construction and design shall permit it to be ceiling or wall mounted, with the use of the mounting brackets supplied, hung by chain or suspended with threaded rod.

PERFORMANCE: All units are engineered to operate at optimal performance with a 60 degree dissipation pattern. Each unit is designed to operate with medium or longwave infrared technology, for the most efficient delivery of heat for the desired space.

OPTIONAL CONTROLS: All infrared units are designed for compatibility to a variety of controls offered by QMark. Depending upon the voltage, wattage, and zoning requirements of the job, these controls may include one or a combination of the following: thermostat, timer, % timer, contactor panels, SSR panel, SCR panel, and/or Z-Wave mobile application based systems.

**QMark reserves the right to change specifications without prior notice.*

How to Order

Example:

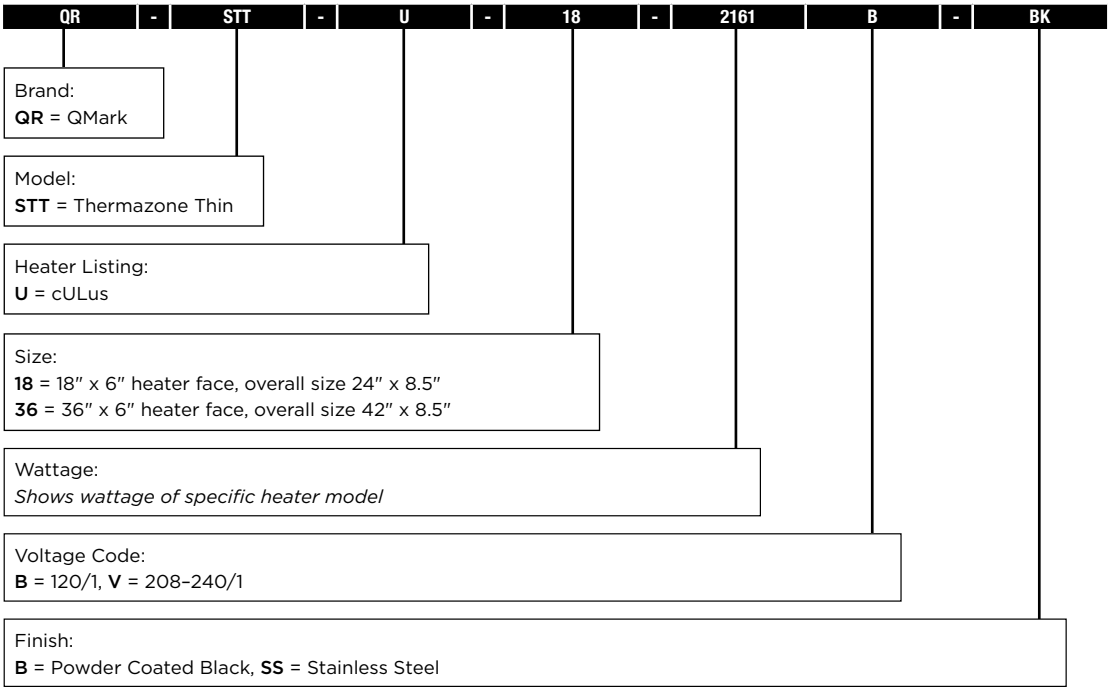

Approvals: _____ _____ _____

Models & Specifications:

ITEM INFORMATION	ELECTRICAL DATA					DIMENSIONAL DATA	
CATALOG NO.	MODEL	WATTS	PHASE	VOLTS	AMPS	DIMENSIONS	SHIP WT.
QR-STT-U18-1091B	18″	1091	1	120	9.1	23 ½″	16 lbs
QR-STT-U18-1330B	18″	1330	1	120	11.1	23 ½″	16 lbs
QR-STT-U18-1767B	18″	1767	1	120	14.8	23 ½″	16 lbs
QR-STT-U18-2161B	18″	2161	1	120	18.0	23 ½″	16 lbs
QR-STT-U36-2180V	36″	1635	1	208	6.8	41 ½″	21 lbs
		2180		240	9.1	41 ½″	21 lbs
QR-STT-U36-2660V	36″	1998	1	208	7.9	41 ½″	21 lbs
		2660		240	11.1	41 ½″	21 lbs
QR-STT-U36-3104V	36″	2331	1	208	11.2	41 ½″	21 lbs
		3104		240	12.9	41 ½″	21 lbs
QR-STT-U36-3534V	36″	2665	1	208	12.8	41 ½″	21 lbs
		3534		240	14.8	41 ½″	21 lbs
QR-STT-U36-4322V	36″	3246	1	208	15.6	41 ½″	21 lbs
		4322		240	18.0	41 ½″	21 lbs

Optional Accessories:

CATALOG NO.	DESCRIPTION	COMPATIBLE WITH
03-104	12″ x 24″ SS Grid	All 12″ x 24″ Heaters
		All 1P 12″ x 48″ Heaters*
03-105	12″ x 12″ SS Grid	All 12″ x 12″ Heaters
03-106	12″ x 16″ SS Grid	All 3P 12″ x 48″ Heaters**

* Requires quantity of 2. ** Requires quantity of 3.

Optional Local Controls:

CATALOG NO.	DESCRIPTION	SUPPLY VOLTAGE	PHASE	AMP RATING	SUITABLE WITH		
					CONTACTOR PANEL	STAND ALONE	SSR PANEL
TZ-REM-PT	Fixed Cycle Controller w/ Adjustable Output	120/24	1	NA	—	—	Yes
TZ-PCT	Adjustable Cycle Controller w/ Adjustable Output	120/240	1	28	Yes	Yes	Yes
TZ-TIMER	0–60 Min Heavy Duty In-Wall On/Off Timer	120/240	1	28	Yes	Yes	Yes
TZ-TIMER2HR	0–120 Min Heavy Duty In-Wall On/Off Timer	120/240	1	28	Yes	Yes	Yes
TZ-HUB	App Based Z-Wave Wireless Connection Hub	120	1	NA	Yes	Yes	Yes
TZ-SWITCH	App Based Z-Wave Wireless Junction Box	120/240	1	40	Yes	Yes	Yes
TZ-REMOTE	Z-Wave Compatible Wireless Switch/Wall Remote	Battery	—	NA	—	—	—

Optional controls suitable for isolated control of your heater(s), or to be paired with QMark's line of control panels to operate banks of heaters together. Options range from adjustable output cycle timers with fixed and adjustable cycle times, to standard on/off timer control, and introducing market leading Z-Wave app based control for easy operation from your phone.

Dimensions — Thermazone Thin:

Model	A	B	C*	D
18″	3 ¾″	24″	9″	8″
36″	3 ¾″	42″	9″	8″

*If using attached bracket

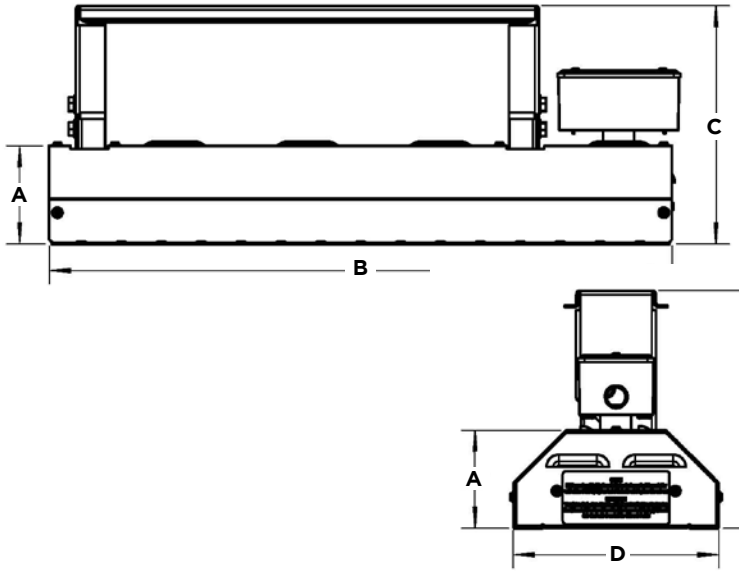

Approvals: _____ _____ _____

Clearances — Thermazone Thin:

	Between Heaters	To Side Walls	To Ceiling
Wall Mounted	36″	7″	7″
Ceiling Mounted Vertical	36″	36″	4″
Ceiling Mounted Angled Away	36″	7″	7″
Ceiling Mounted Angled Toward	36″	72″	4″

Reflection Angle:

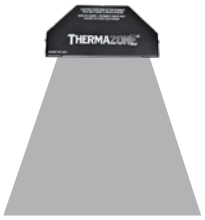

60° Symmetrical

Wall Mounting
Do not install the section closer than

- 4 inches to a horizontal surface
- 12 inches to an adjacent vertical surface
- 36 inches to another heater
- 6 feet from the floor

For angle positioning, the heater should not be directed toward any vertical surface closer than 6 feet.

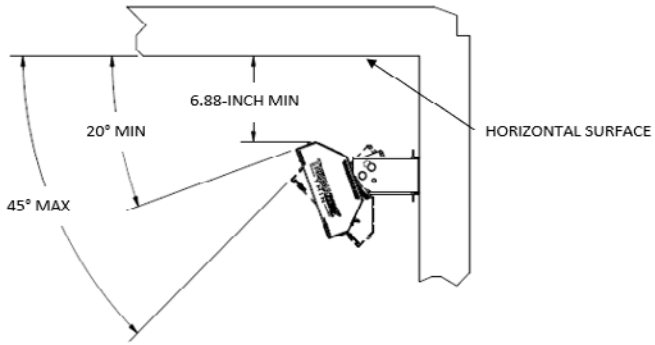

Fig. 2a – WALL MOUNTING

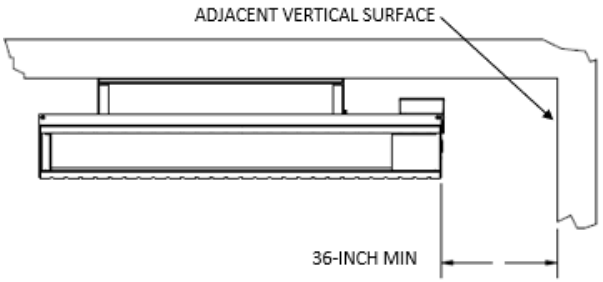

Fig. 2b – WALL MOUNTING

Ceiling Mounting
Do not install the section closer than

- 36 inches to a vertical surface for vertical mounting
- 4 inches to a vertical surface for angled ceiling mounting
- 12 inches to an adjacent vertical surface
- 36 inches to another heater
- 6 feet from the floor

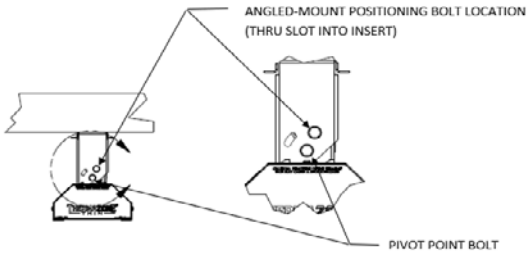

Fig. 3 – CEILING ONLY VERTICAL MOUNTING POSITIONING

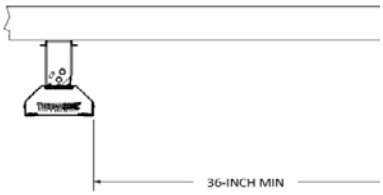

Fig. 4 – CEILING MOUNTING VERTICAL

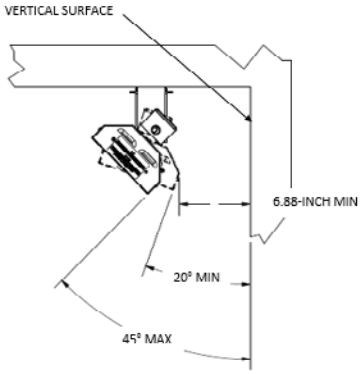

Fig. 5 – CEILING MOUNTING ANGLED AWAY FROM VERTICAL SURFACE

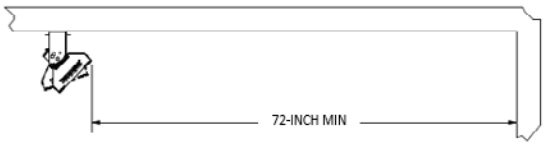

Fig. 6 – CEILING MOUNTING ANGLED TOWARDS VERTICAL SURFACE

Reference product instruction manual for additional information on proper mounting, wiring, and installation.

No matter the industry or application, Marley Engineered Products has a robust portfolio of innovative, reliable, high-performance comfort heating and ventilation solutions for all your heating needs.

For more information or assistance on your next project, contact Technical Services at 800-642-4328

Scan the QR code to access additional specs and features

Approvals: _____ _____ _____