ORIGINAL DOCUMENT

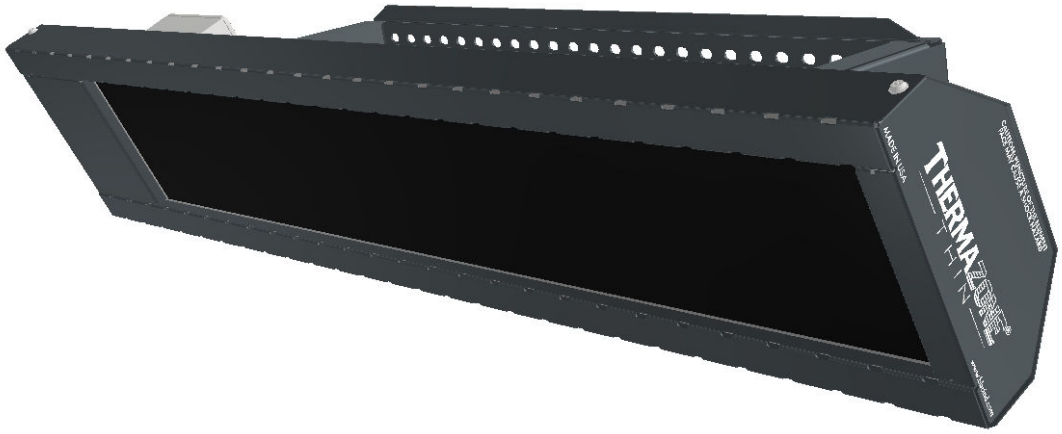

THERMAZONE® THIN

COMFORT HEATERS

QMark

470 Beauty Spot Road East – Bennettsville, SC 29512 USA

(800) 642-4328 – www.marleymep.com

IMPORTANT INSTRUCTIONS:

Read all these instructions before installing or using this heater.

QMark is interested in the safe operation of its equipment. All wiring to this equipment must be connected to the electrical source in strict accordance with National Electrical Code (N. E. C.), Canadian Electrical Code (C.E.C.), international and/or any local codes having jurisdiction.

Do not further insulate the back of the heater section, which might cause a heat buildup in the wiring junction box.

Puncture of the element face may result in a shock hazard.

This heater is hot when in use. To avoid burns, do not let bare skin touch hot surfaces. Keep combustible materials, such as furniture, pillows, bedding, paper, clothes, etc. and curtains at least 3 feet from the front of the heater and keep them away from the sides and rear.

Extreme caution is necessary when any heater is used by or near children or invalids and whenever the heater is left operating and unattended.

Do not operate any heater after it malfunctions. Disconnect power at service panel and have heater inspected by a reputable electrician before reusing.

To disconnect the heater, turn off power to heater circuit at main disconnect panel.

Do not insert or allow foreign objects to enter any ventilation opening as this may cause an electric shock or fire, or damage to the heater.

A heater has hot and arcing or sparking parts inside. Do not use it in areas where gasoline, paint, or flammable vapors or liquids are used or stored.

Use this heater only as described in this manual. Any other use not recommended by the manufacturer may cause fire, electric shock, or injury to persons.

SAVE THESE INSTRUCTIONS

INSTALLATION:

All wiring to this equipment must be connected to the electrical source in strict accordance with National Electrical Code (N. E. C.), Canadian Electrical Code (C.E.C.), international and/or any local codes having jurisdiction.

FOR WALL MOUNTING:

Do not install the section closer than:

- 6-7/8 inches below a horizontal surface
- 12 inches to an adjacent vertical surface
- 36 inches to another heater
- 6 feet from the floor

For angle positioning, the heater should not be directed toward any vertical surface closer than 6 feet.

The heater is to be mounted horizontally.

IMPORTANT: For Wall-Mounted heaters, insert the positioning bolts through the slots on both sides of the mounting bracket. DO NOT USE the ceiling mounting hole when mounting a heater on a wall.

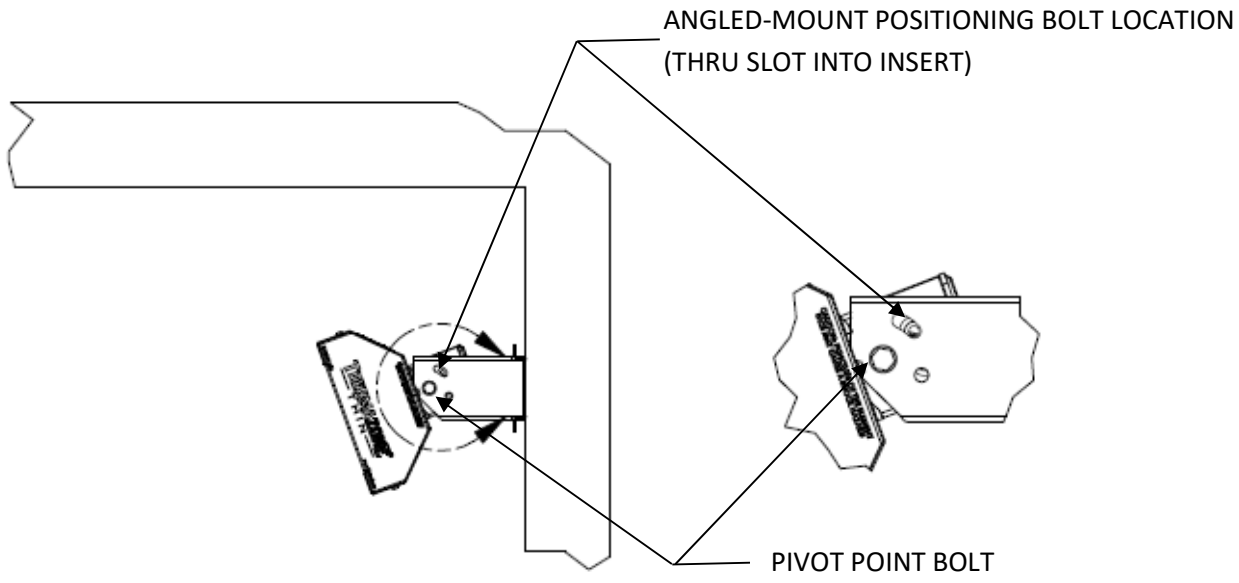

Fig. 1 – ANGLED POSITIONING FOR WALL MOUNTING

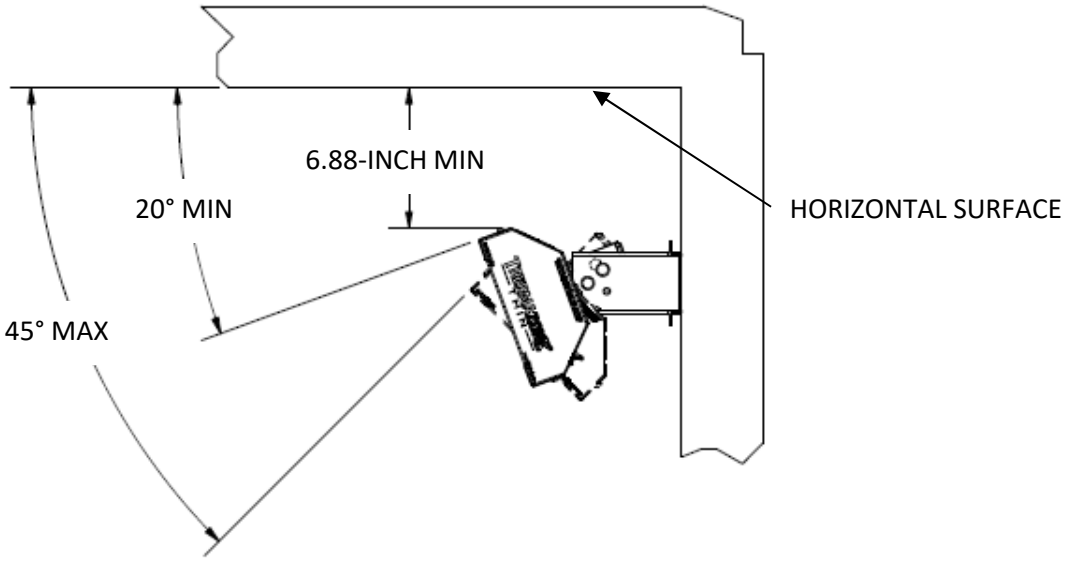

Fig. 2a – WALL MOUNTING

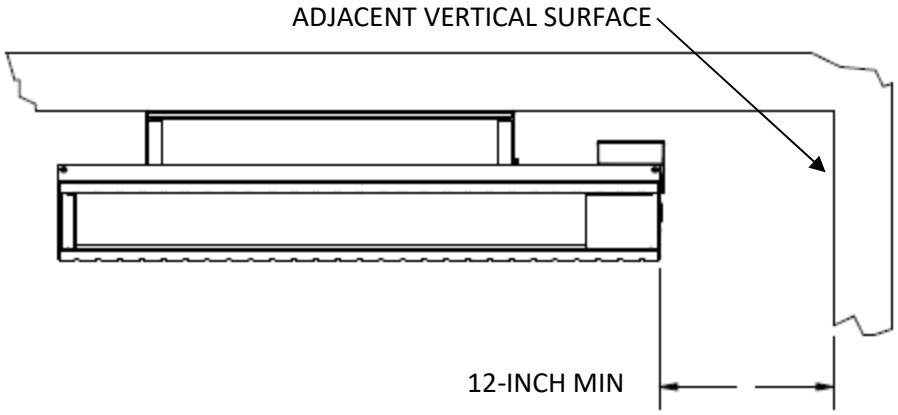

Fig. 2b – WALL MOUNTING

Once the heater is mounted to the wall, position the heater to the desired angle between 20° and 45° downward from the horizontal, limited by the slot length. Tighten the two positioning bolts to secure the heater.

WARNING! Risk of fire. Do not position any heater at an angle not allowed by the slotted hole (20°-45°).

FOR CEILING MOUNTING:

Do not install the section closer than:

- 36 inches to a vertical surface for vertical mounting
- 6-7/8 inches to a vertical surface for angled ceiling mounting
- 12 inches to an adjacent vertical surface
- 36 inches to another heater
- 6 feet from the floor

Ceiling mounted heaters can be mounted either through the Angled-Mount Positioning Bolt Location *or* the Ceiling-Mount Only Positioning Bolt Location.

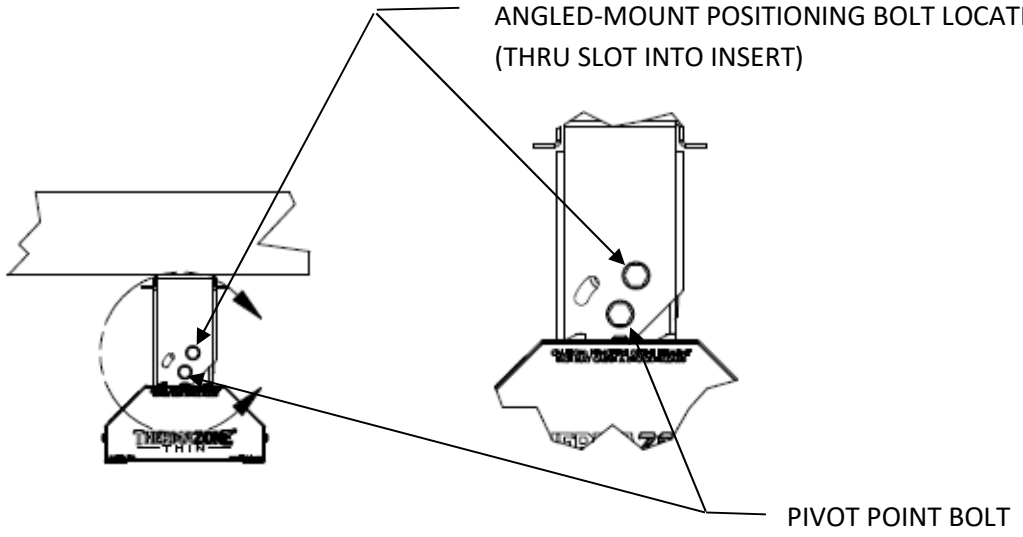

Fig. 3 – CEILING ONLY VERTICAL MOUNTING POSITIONING

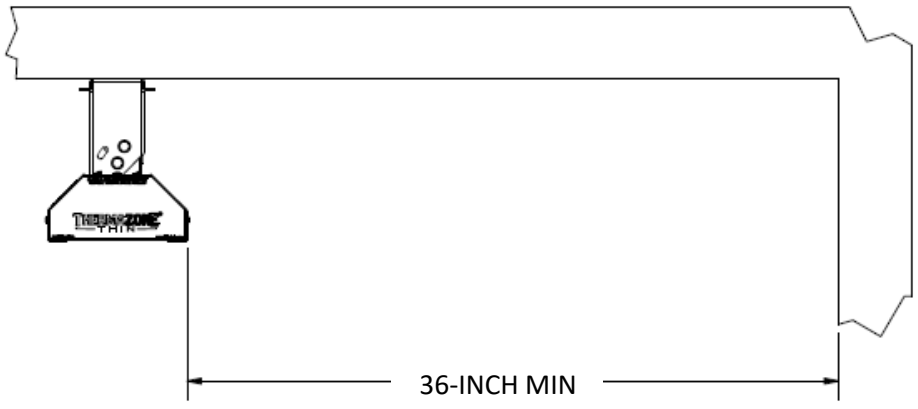

Fig. 4 – CEILING MOUNTING VERTICAL

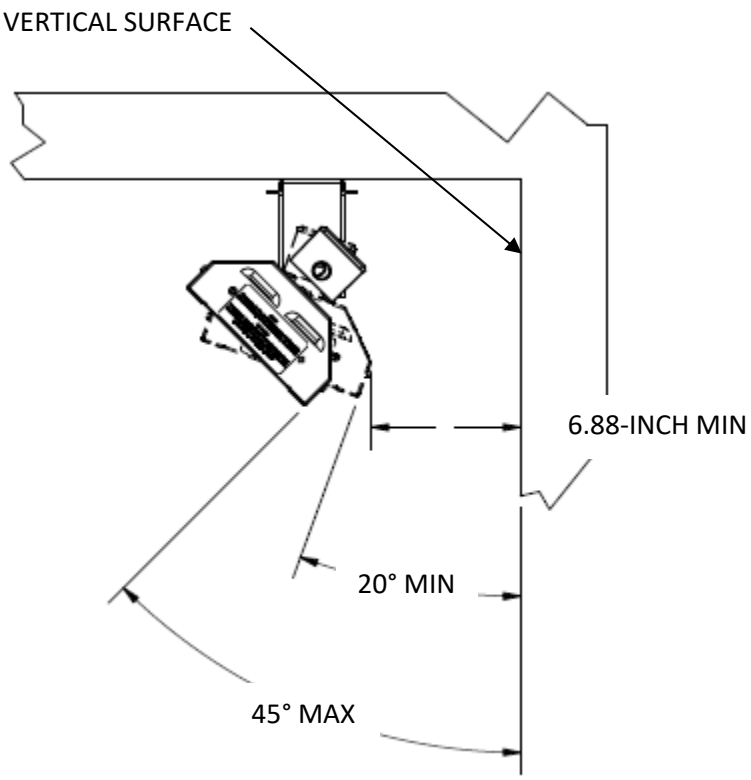

Fig. 5 – CEILING MOUNTING ANGLED AWAY FROM VERTICAL SURFACE

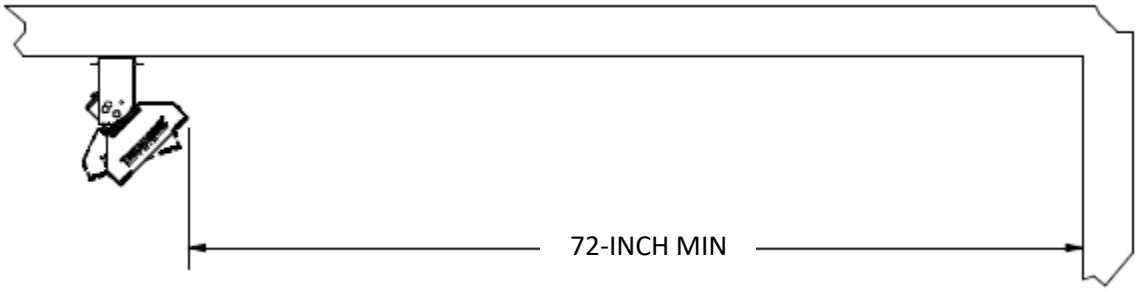

Fig. 6 – CEILING MOUNTING ANGLED TOWARDS VERTICAL SURFACE

FOR *PROTECTED AREA* MOUNTING:

A *Protected Area* is defined as "Located in an area that is partially protected from the effects of weathering." Typical *protected areas* would be the underside of a pavilion with a roof, garage port, and the like.

FOR *PROTECTED AREA* WALL MOUNTING:

Adhere to all requirements for Wall Mounting listed above. Additionally:

Do not install the section closer than 12 inches to edge of overhang of roof and no more than 8.25 inches (to top of bracket) below the edge.

The heater needs to be installed in a position such that it is protected from rain, snow, and similar outdoor wet areas.

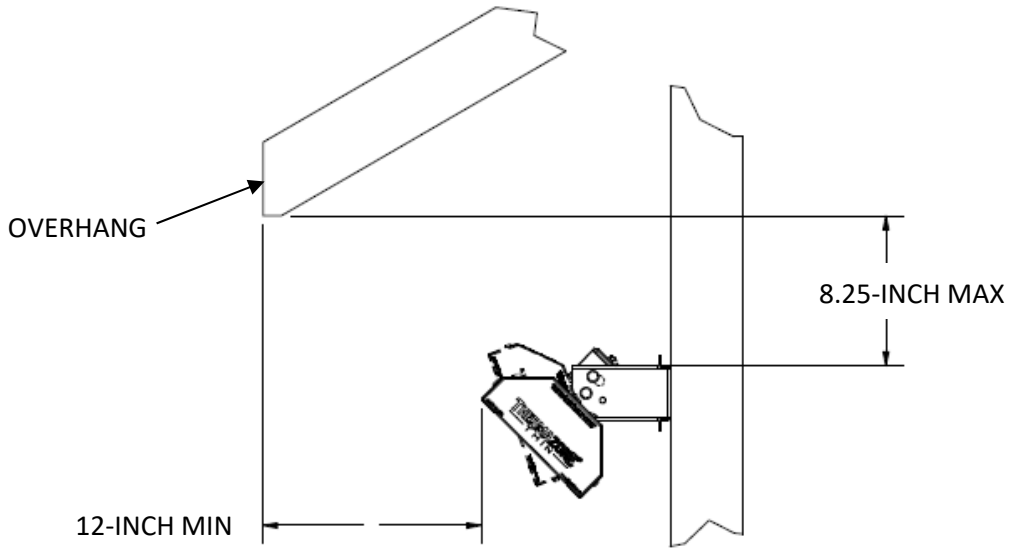

Fig. 7 – *PROTECTED AREA* WALL MOUNTING

FOR *PROTECTED AREA* CEILING MOUNTING:

Adhere to all requirements for Ceiling Mounting listed above. Additionally:

Do not install the section closer than 12 inches to edge of overhang of roof.

The heater needs to be installed in a position such that it is protected from rain, snow, and similar outdoor wet areas.

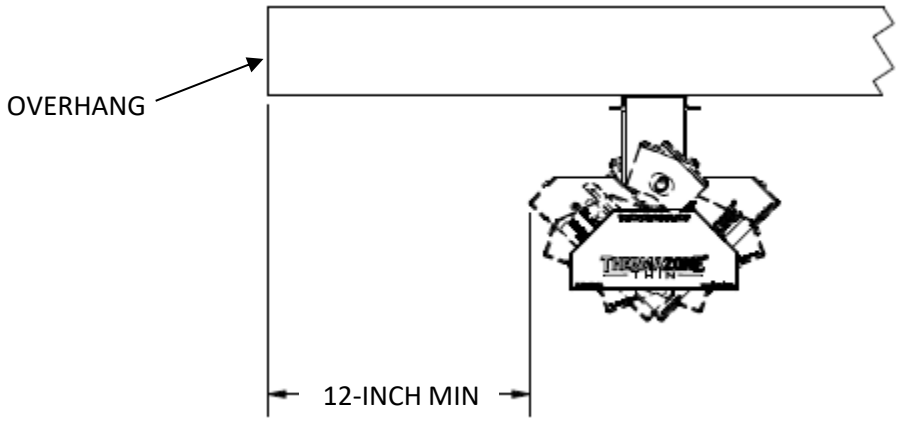

Fig. 8 – *PROTECTED AREA* CEILING MOUNTING

For supply connections, use the wire size (or larger) as directed by the chart below. All wires must be suitable for at least 90°C (194°F).

SUPPLY CONNECTIONS		
MODEL NUMBER	120 VOLT AWG. WIRE SIZE	208 / 240 VOLT AWG. WIRE SIZE
QR-STT-U18-1091B QR-STT-U18-1330B	14	-
QR-STT-U18-1767B	12	-
QR-STT-U18-2161B	10	-
QR-STT-U36-2180V QR-STT-U36-2660V	-	14
QR-STT-U36-3104V QR-STT-U36-3534V	-	12
QR-STT-U36-4322V	-	10

To reduce the risk of fire, do not store or use gasoline or other flammable vapors and liquids in the vicinity of the heater.

CAUTION – High temperature, risk of fire, keep electrical cords, drapery, furnishings, and other combustibles at least 3 feet (0.9 m) from the front of the heater and away from the side and rear.

WIRING DIAGRAM

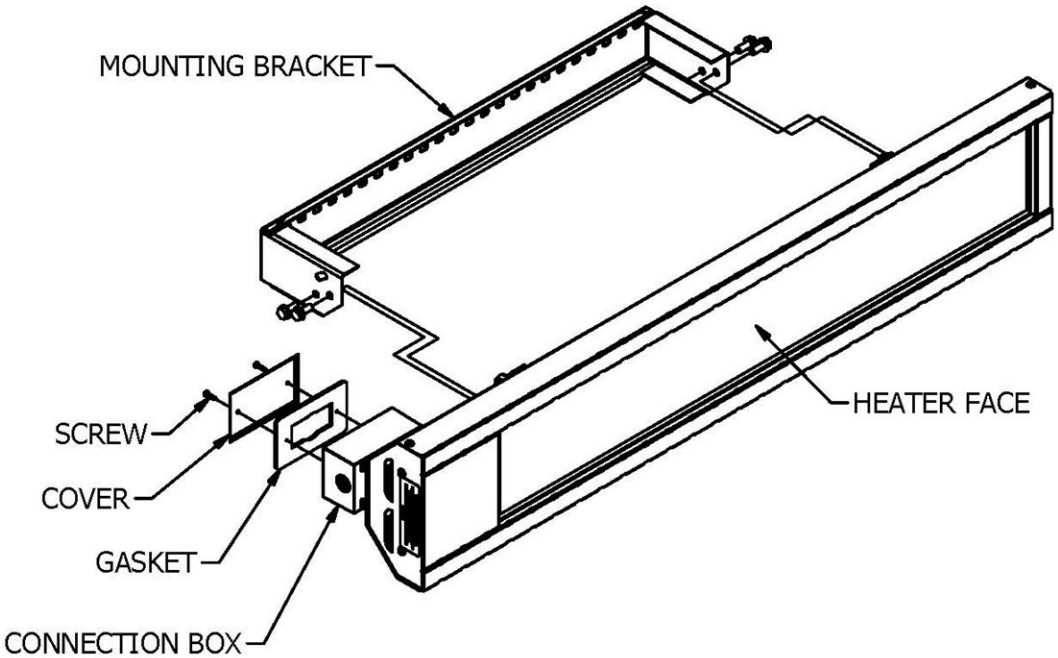

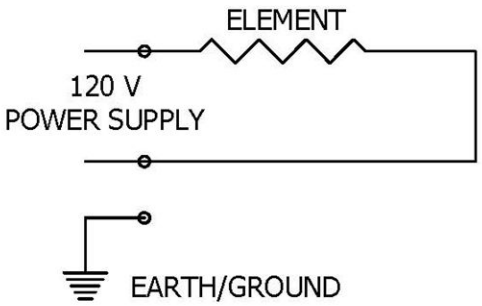

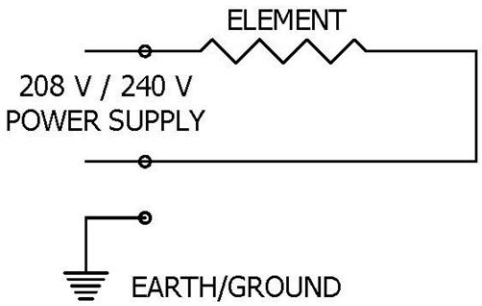

OPERATION:



Heaters must be properly installed before use.

Do not operate heaters without all covers in place.

No user maintenance is needed for heaters. Any other servicing should be performed by authorized service personnel.

During production, the heating element of this unit may have absorbed moisture. The first time your heater is turned ON, it may smoke/steam while the moisture is released. This smoke/steam is NORMAL and not harmful. It will stop after 10-15 minutes of operation and not occur after first use.