ORIGINAL DOCUMENT



THERMAZONE®

COMFORT HEATERS

QMark

470 Beauty Spot Road East – Bennettsville, SC 29512 USA

(800) 642-4328 – www.marleymep.com

IMPORTANT INSTRUCTIONS:

Read all these instructions before installing or using this heater.

QMark is interested in the safe operation of its equipment. All wiring to this equipment must be connected to the electrical source in strict accordance with National Electrical Code (N.E.C.), Canadian Electrical Code (C.E.C.), international and/or any local codes having jurisdiction.

Do not further insulate the back of the heater section which might cause a heat buildup in the wiring raceway. The back surface of the raceway should be at least 4 inches from combustible material.

Puncture of the element face may result in a shock hazard.

This heater is hot when in use. To avoid burns, do not let bare skin touch hot surfaces. Keep combustible materials, such as furniture, pillows, bedding, paper, clothes, etc. and curtains at least 3 feet from the front of the heater and keep them away from the sides and rear.

Extreme caution is necessary when any heater is used by or near children or invalids and whenever the heater is left operating and unattended.

Do not operate any heater after it malfunctions. Disconnect power at service panel and have heater inspected by a reputable electrician before reusing.

To disconnect the heater, turn off power to heater circuit at main disconnect panel.

Do not insert or allow foreign objects to enter any ventilation opening as this may cause an electric shock or fire, or damage to the heater.

A heater has hot and arcing or sparking parts inside. Do not use it in areas where gasoline, paint, or flammable vapors or liquids are used or stored.

Use this heater only as described in this manual. Any other use not recommended by the manufacturer may cause fire, electric shock, or injury to persons.

SAVE THESE INSTRUCTIONS

INSTALLATION:

All wiring to this equipment must be connected to the electrical source in strict accordance with National Electrical Code (N. E. C.), Canadian Electrical Code (C.E.C.), international and/or any local codes having jurisdiction.

FOR WALL MOUNTING:

Do not install the section closer than:

- 4 inches to a horizontal surface
- 12 inches to an adjacent vertical surface
- 36 inches to another heater
- 6 feet from the floor

For angle positioning, the heater should not be directed toward any vertical surface closer than 6 feet.

IMPORTANT: When using the mounting brackets, a minimum of 4 inches should be left between the corners of the heating section and any horizontal or vertical surface. See drawing below.

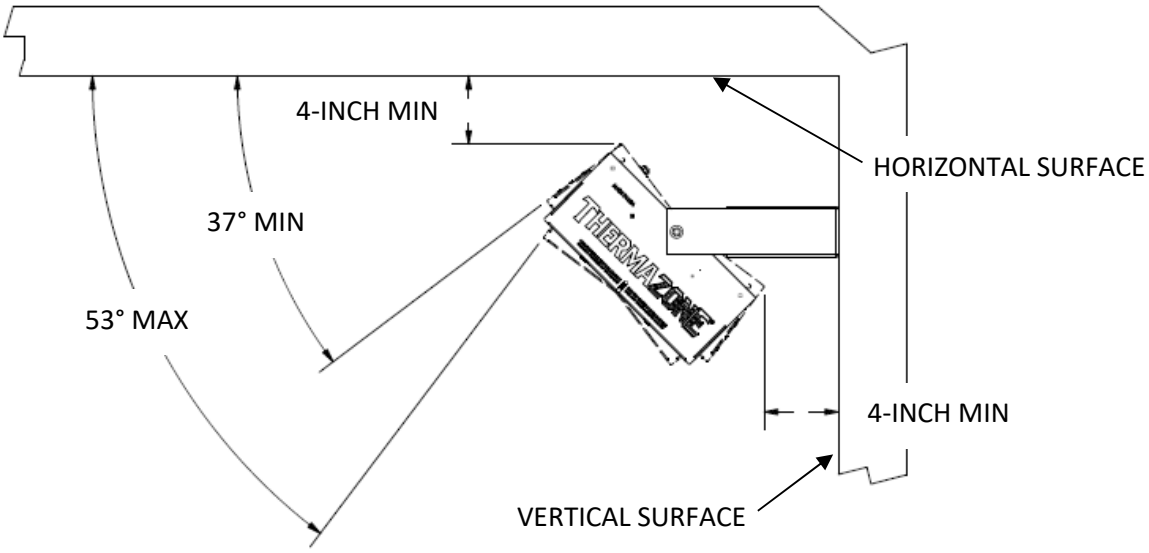

Fig. 1a – WALL MOUNTING

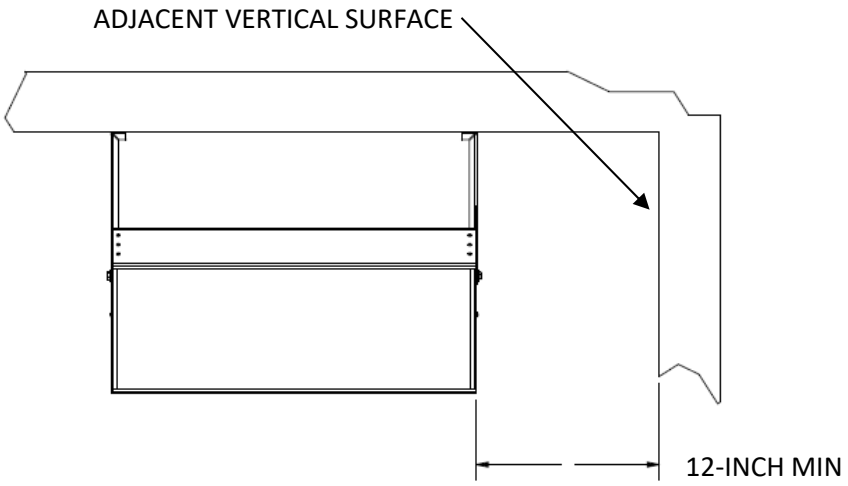

Fig. 1b – WALL MOUNTING

Once the heater is mounted to the wall, position the heater to the desired angle between 37° and 53° downward from the horizontal, limited by the flanges of the mounting bracket. Tighten the two bolts to secure the heater.

WARNING! Risk of fire. Do not position any heater at an angle not allowed by the flanged bracket (37°-53°).

FOR CEILING MOUNTING:

Do not install the section closer than:

- 36 inches to a vertical surface for vertical mounting
- 4 inches to a vertical surface for angled ceiling mounting
- 12 inches to an adjacent vertical surface
- 36 inches to another heater
- 6 feet from the floor

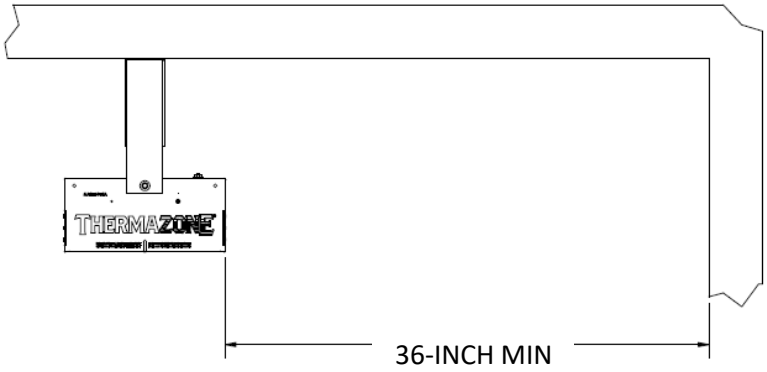

Fig. 2 – CEILING MOUNTING VERTICAL

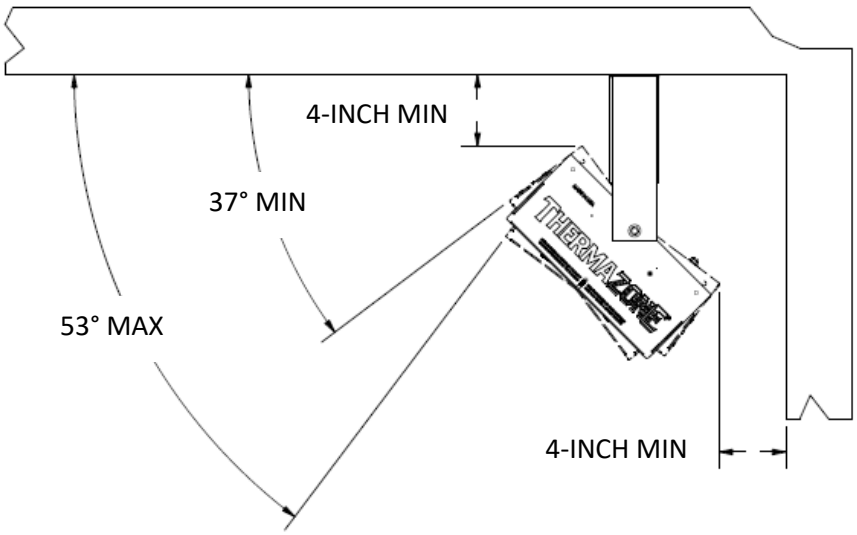

Fig. 3 – CEILING MOUNTING ANGLED AWAY FROM VERTICAL SURFACE

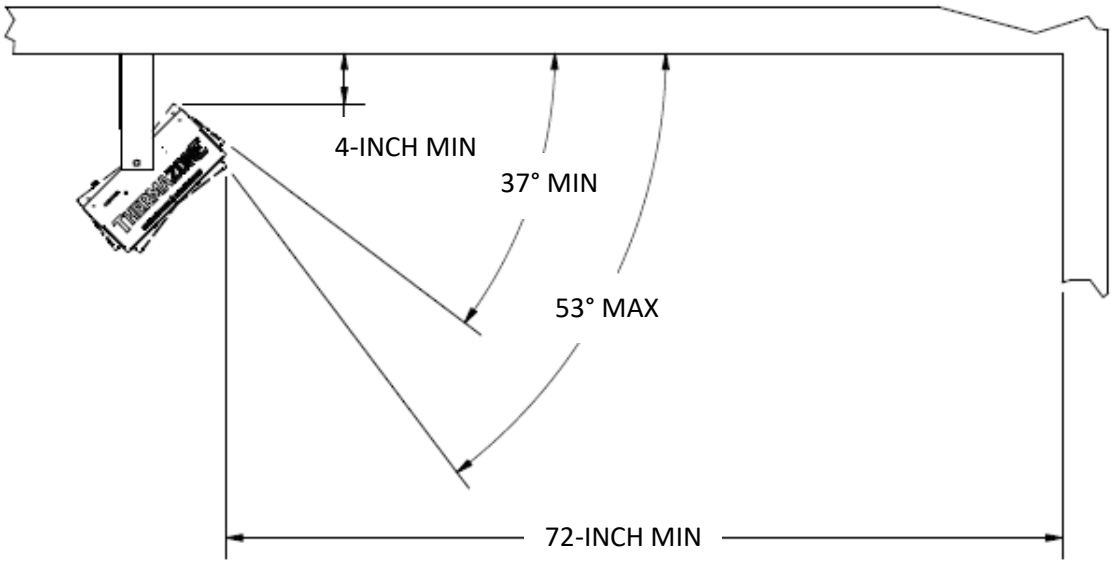

Fig. 4 – CEILING MOUNTING ANGLED TOWARDS VERTICAL SURFACE

***PROTECTED AREA* MOUNTING:**

A *Protected Area* is defined as "Located in an area that is partially protected from the effects of weathering." Typical *protected areas* would be the underside of a pavilion with a roof, garage port, and the like.

FOR *PROTECTED AREA* WALL MOUNTING:

Adhere to all requirement for mounting listed above. Additionally:

Do not install the section closer than 18 inches to edge of overhang of roof and no more than 7.25 inches (to top of bracket) below the edge.

The heater needs to be installed in a position such that it is protected from rain, snow, and similar outdoor wet areas.

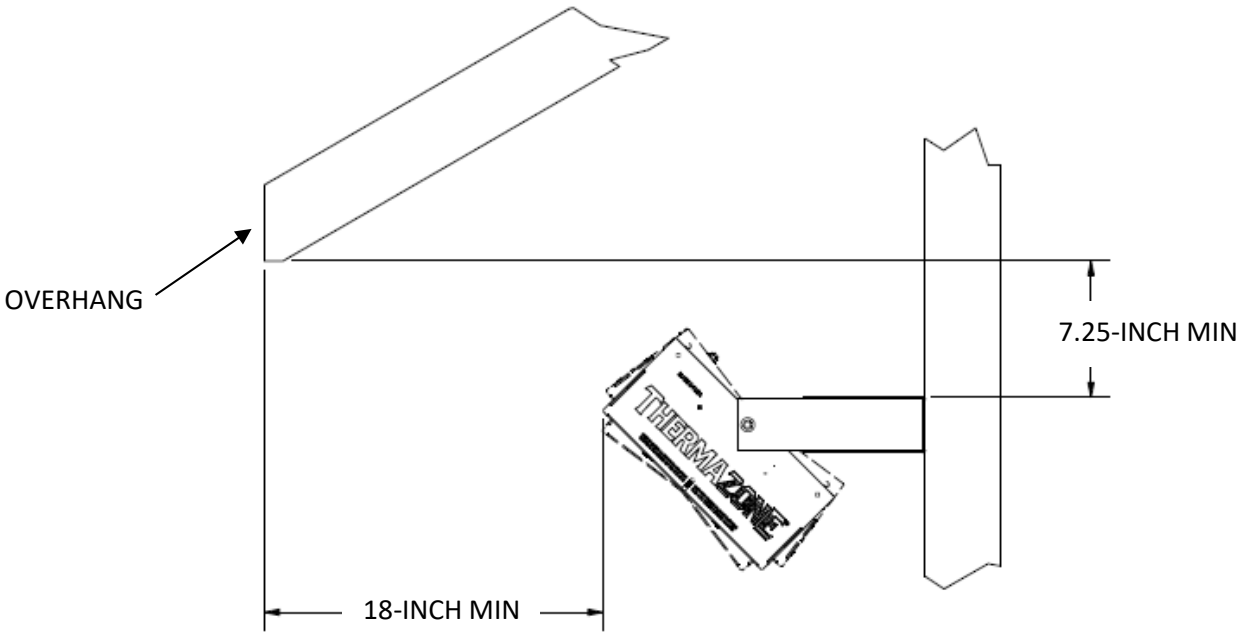

Fig. 5 – *PROTECTED AREA* MOUNTING

FOR *PROTECTED AREA* CEILING MOUNTING:

Adhere to all requirements for Ceiling Mounting listed above. Additionally:

Do not install the section closer than 18 inches to edge of overhang of roof.

The heater needs to be installed in a position such that it is protected from rain, snow, and similar outdoor wet areas.

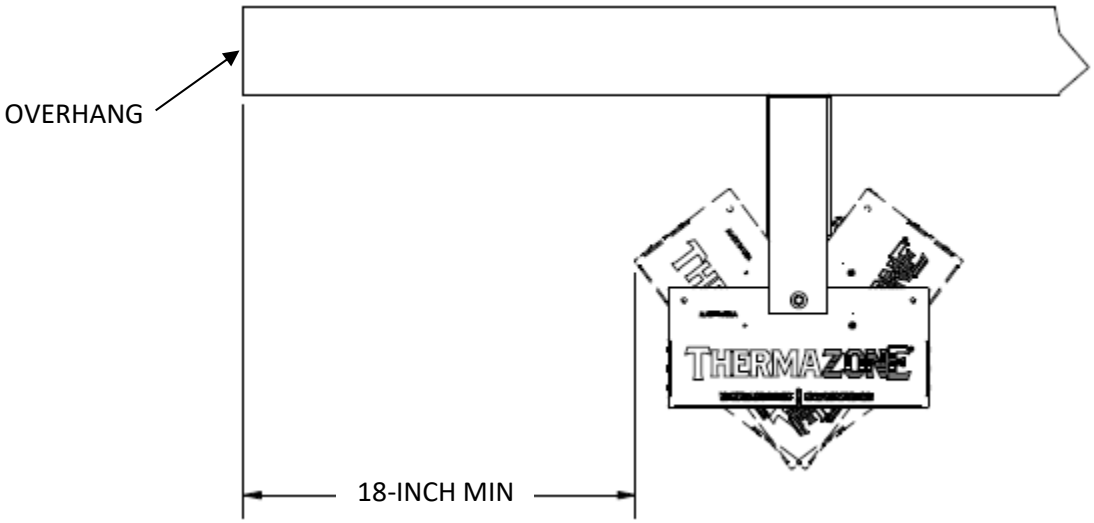

Fig. 6 – *PROTECTED AREA* CEILING MOUNTING

For supply connections use the wire size (or larger) as directed by the chart below. All wires must be suitable for at least 75°C (167°F).

SINGLE PHASE SECTIONS						
MODEL NUMBER	120 VOLT	208/240 VOLT	277 VOLT	347 VOLT	480 VOLT	600 VOLT
	AWG. WIRE SIZE	AWG. WIRE SIZE	AWG. WIRE SIZE	AWG. WIRE SIZE	AWG. WIRE SIZE	AWG. WIRE SIZE
QR-STS-U12-0871B QR-STS -U12-1081B	14	-	-	-	-	-
QR-STS -U12-1111B QR-STS -U12-1681B	12	-	-	-	-	-
QR-STS -U12-1436J	-	14		-		-
QR-STS -U24-1316B	14	-	-	-	-	-
QR-STS -U24-1659B	12	-	-	-	-	-
QR-STS -U24-2192B QR-STS -U24-2222B	10	-	-	-	-	-
QR-STS -U24-3363B	8	-	-	-	-	-
QR-STS -U24-1015V QR-STS -U24-1297V QR-STS -U24-1701V QR-STS -U24-2001V QR-STS -U24-2428V	-	14	-	-	-	-
QR-STS -U24-3239V	-	12	-	-	-	-
QR-STS -U24-1982N QR-STS -U24-2388N QR-STS -U24-3008N	-	-	14	-	-	-
QR-STS -U24-2060I QR-STS -U24-2488I QR-STS -U24-3176I	-	-	-	14	-	-
QR-STS -U48-2030V QR-STS -U48-2594V	-	14	-	-	-	-
QR-STS -U48-3402V	-	12	-	-	-	-
QR-STS -U48-4002V QR-STS -U48-4856V	-	10	-	-	-	-
QR-STS -U48-6478V	-	8	-	-	-	-
QR-STS -U48-2030T QR-STS -U48-2594T	-	14	-	-	14	-
QR-STS -U48-3402T	-	12	-	-	14	-
QR-STS -U48-4002T QR-STS -U48-4856T	-	10	-	-	14	-
QR-STS -U48-6478T	-	8	-	-	12	-
QR-STS -U48-3964N	-	-	12	-	-	-

SINGLE PHASE SECTIONS – Continued						
MODEL NUMBER	120 VOLT	208/240 VOLT	277 VOLT	347 VOLT	480 VOLT	600 VOLT
	AWG. WIRE SIZE	AWG. WIRE SIZE	AWG. WIRE SIZE	AWG. WIRE SIZE	AWG. WIRE SIZE	AWG. WIRE SIZE
QR-STS -U48-4776N QR-STS -U48-6056N	-	-	10	-	-	-
QR-STS -U48-2014I QR-STS -U48-2502I QR-STS -U48-3206I	-	-	-	14	-	-
QR-STS -U48-4120I QR-STS -U48-4976I	-	-	-	12	-	-
QR-STS -U48-6352I	-	-	-	10	-	-
QR-STS -U48-4042Y QR-STS -U48-4878Y QR-STS -U48-6118Y	-	-	-	-	-	14
3-PHASE SECTIONS						
MODEL NUMBER	120 VOLT AWG. WIRE SIZE	208 / 240 VOLT AWG. WIRE SIZE	277 VOLT AWG. WIRE SIZE	347 VOLT AWG. WIRE SIZE	480 VOLT AWG. WIRE SIZE	600 VOLT AWG. WIRE SIZE
QR-STS -U24-1992P QR-STS -U24-2442P QR-STS -U24-3041P	-	14	-	-	-	-
QR-STS -U48-3971P	-	14	-	-	-	-
QR-STS -U48-4794P QR-STS -U48-5954P	-	12	-	-	-	-
QR-STS -U48-3928U QR-STS -U48-4838U QR-STS -U48-6060U	-	-	-	-	14	-
QR-STS -U48-3963Z QR-STS -U48-4797Z QR-STS -U48-5982Z	-	-	-	-	-	14

To reduce the risk of fire, do not store or use gasoline or other flammable vapors and liquids in the vicinity of the heater.

CAUTION – High temperature, risk of fire, keep electrical cords, drapery, furnishings, and other combustibles at least 6 feet (0.9 m) from the front of the heater and away from the side and rear.

WIRING DIAGRAMS

FIG. 1 – 12” x 12” SECTIONS
120 / 208 / 240 VOLT – SINGLE PHASE

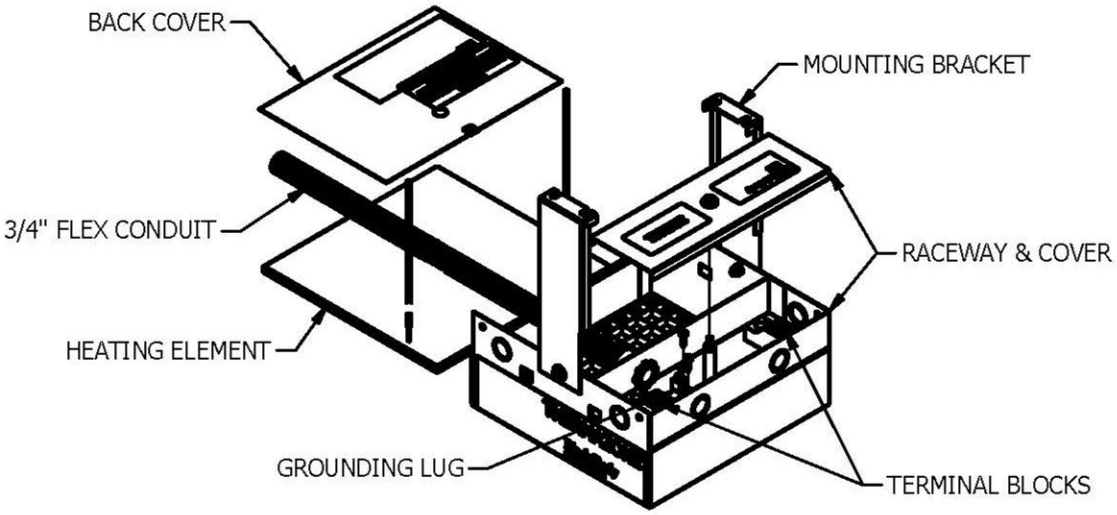

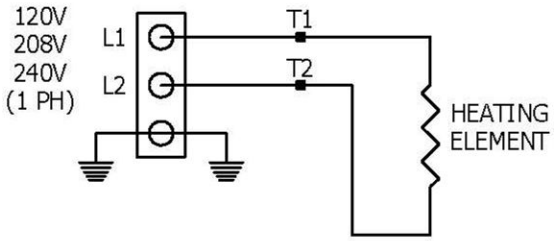

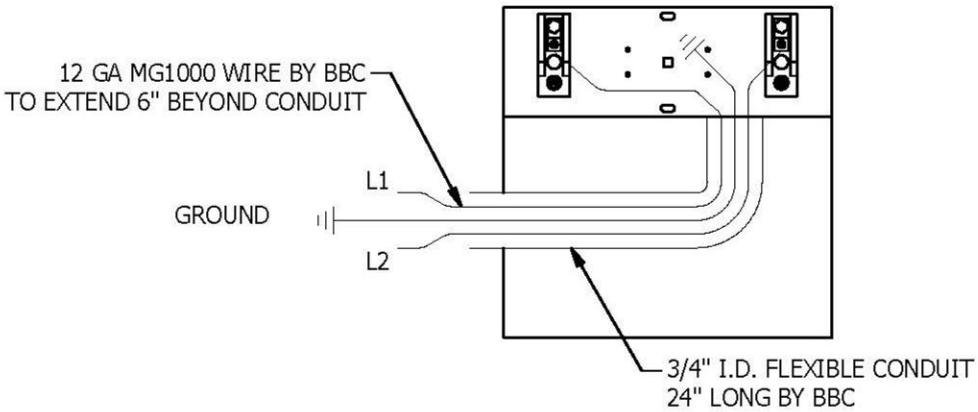

FIG. 2 – 24” x 12” SECTIONS (DUAL ELEMENT)
120 VOLT – SINGLE PHASE

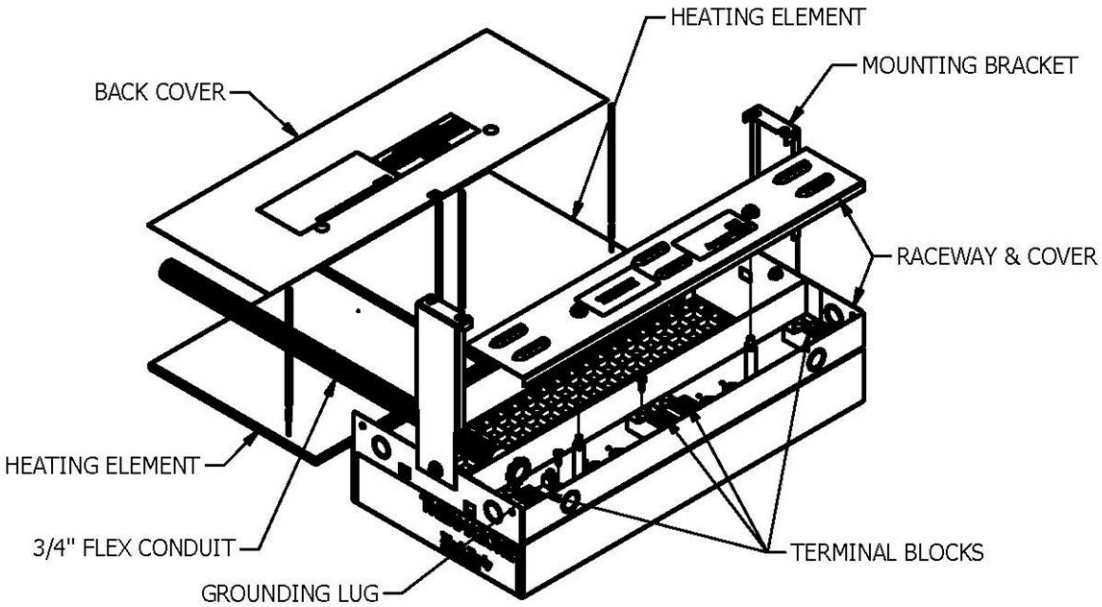

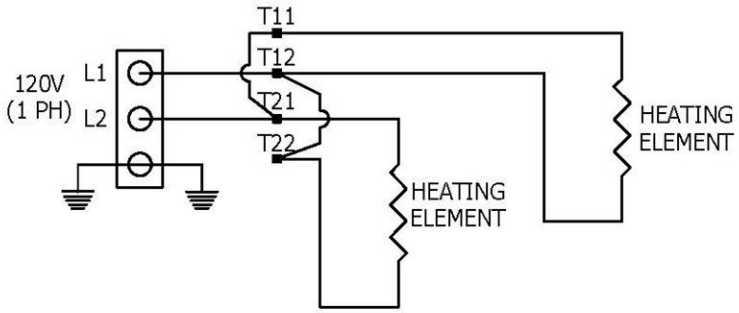

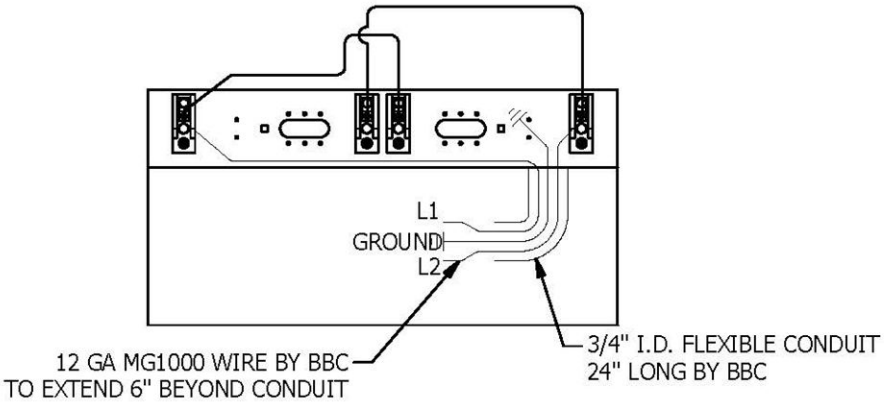

FIG. 3 – 24” x 12” SECTIONS (SINGLE ELEMENT)
120 / 208 / 240 / 277 / 347 VOLT SINGLE PHASE

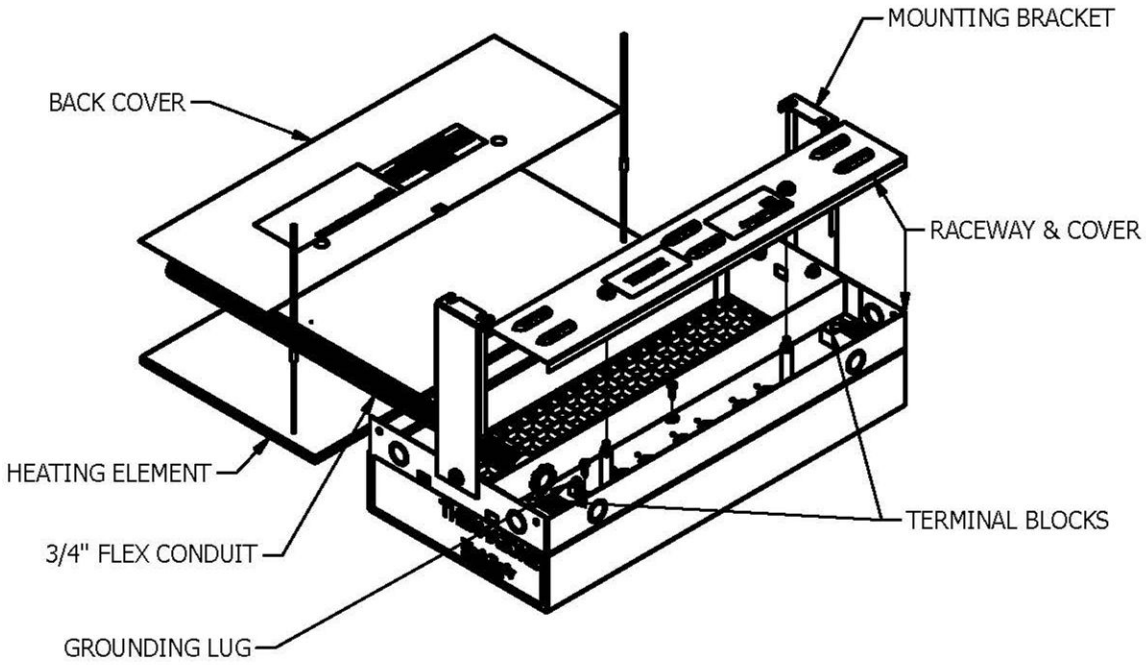

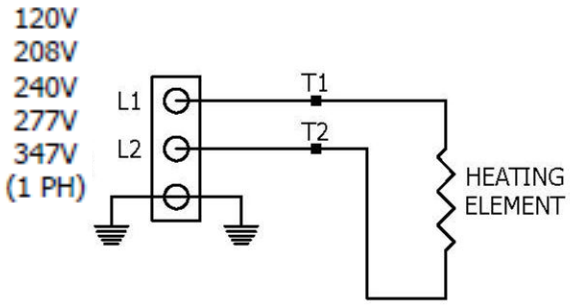

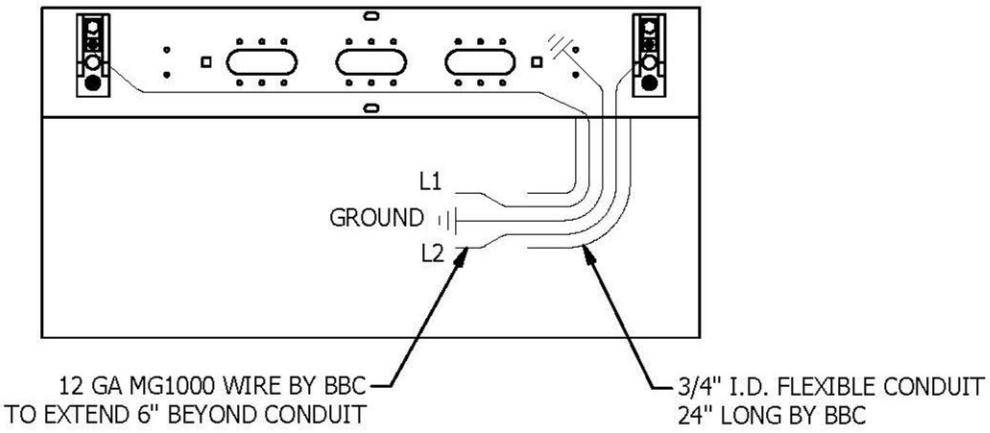

FIG. 4 – 48” x 12” SECTIONS
208 / 240 / 277 / 347 VOLT – SINGLE PHASE

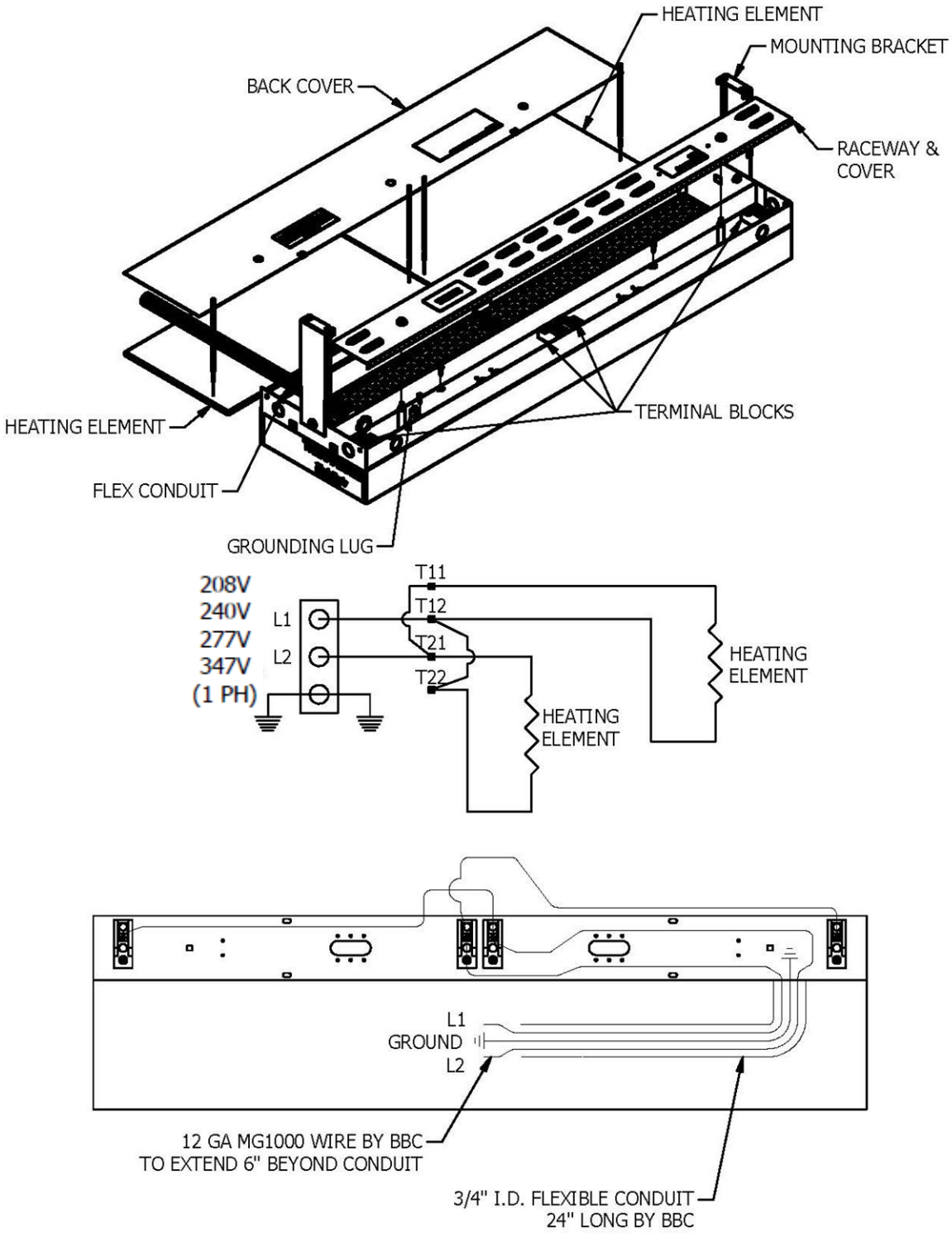

FIG. 5 – 48” x 12” SECTIONS
277 / DV (480) / 600 VOLT SINGLE PHASE

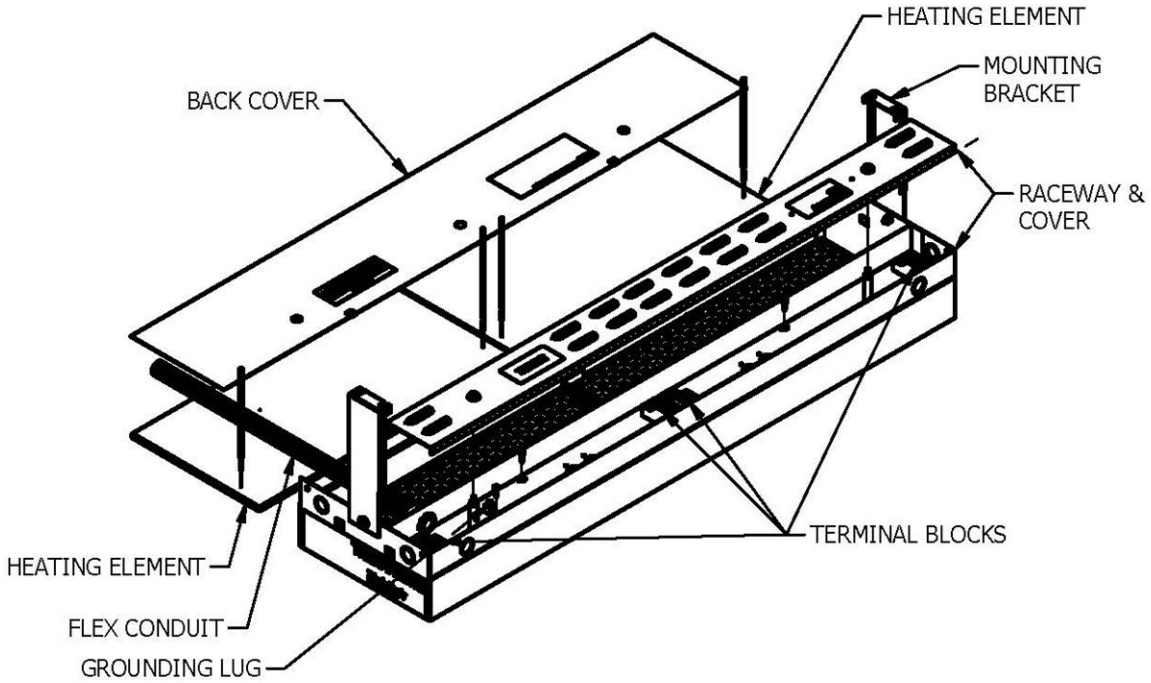

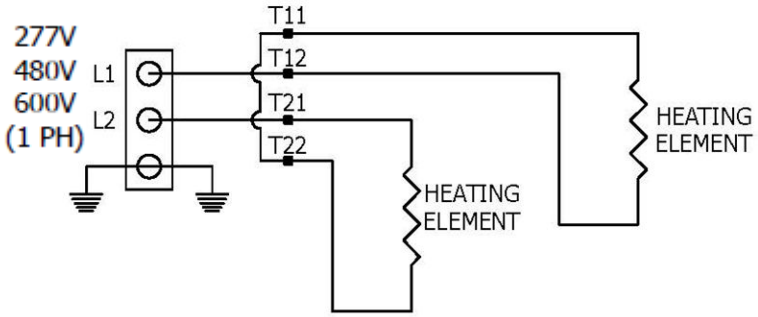

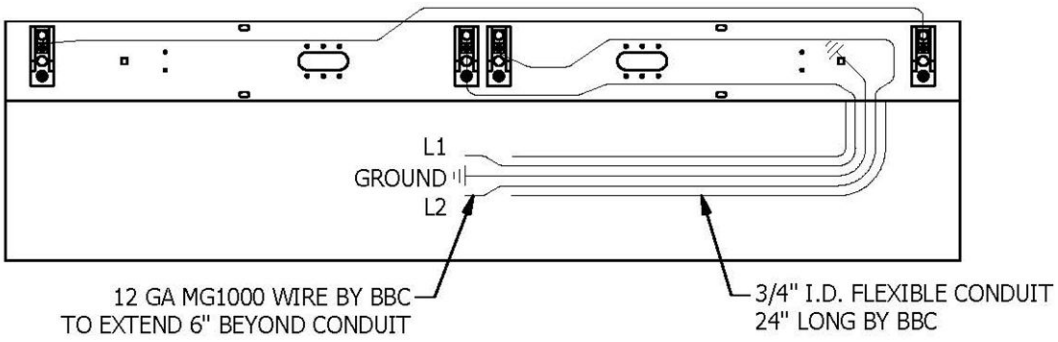

FIG. 6 – 24” x 12” SECTIONS
240 VOLT – THREE PHASE

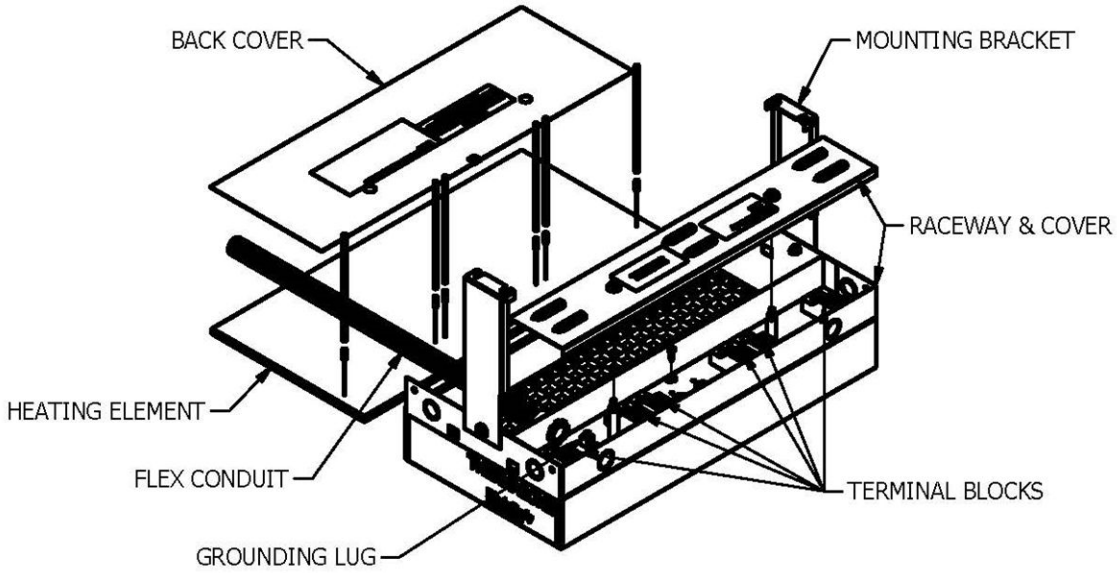

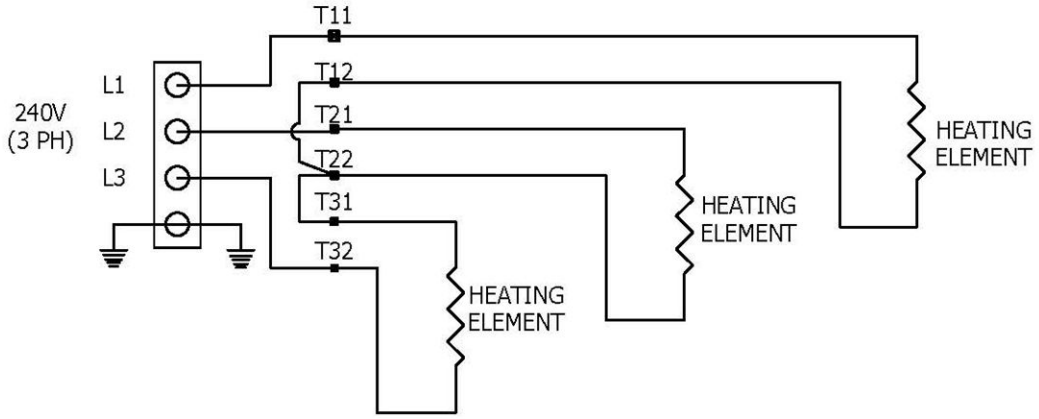

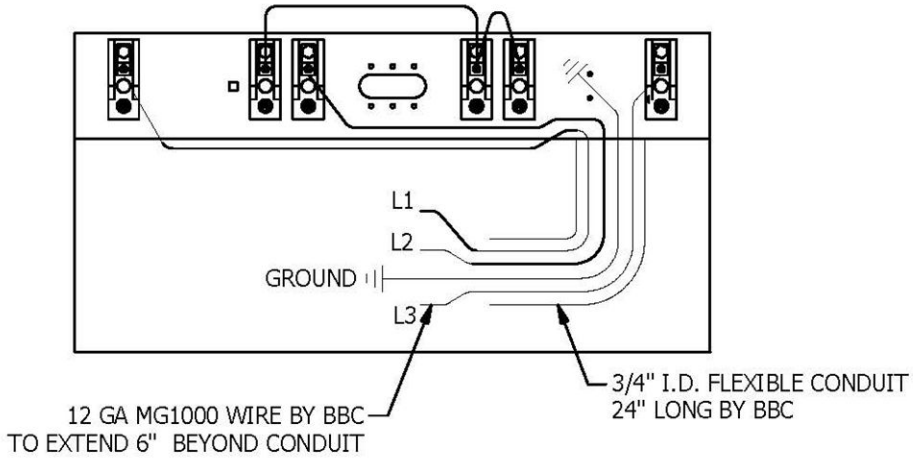

FIG. 7 – 48” x 12” SECTIONS

208 / 240 / 480 / 600 VOLT – THREE PHASE

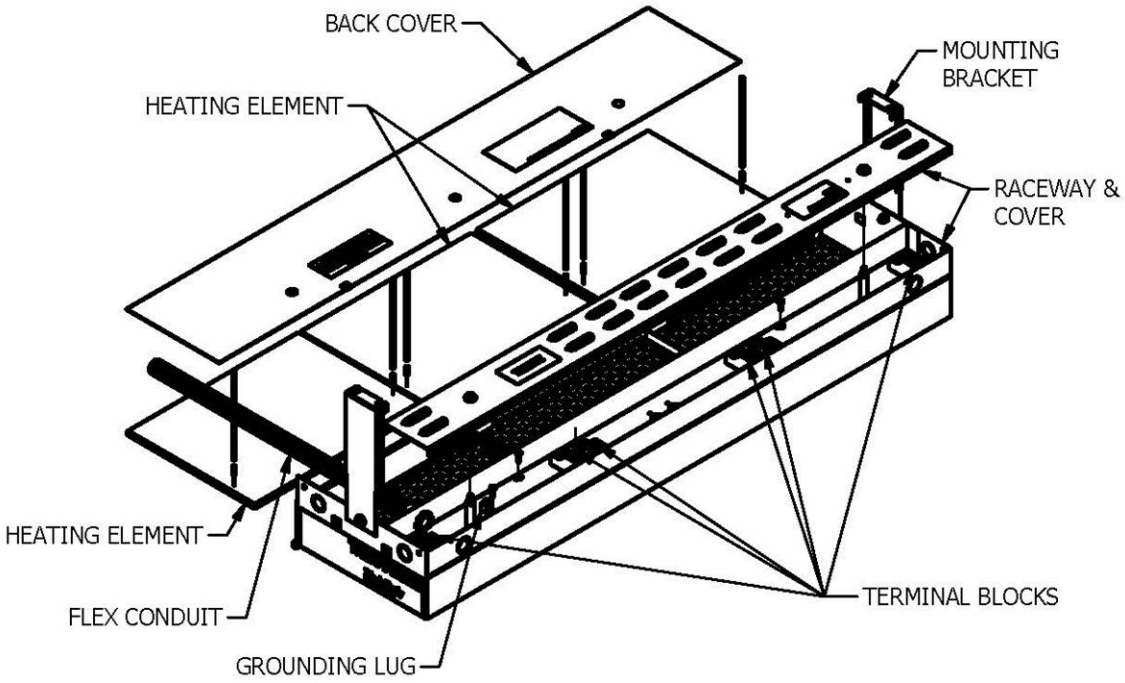

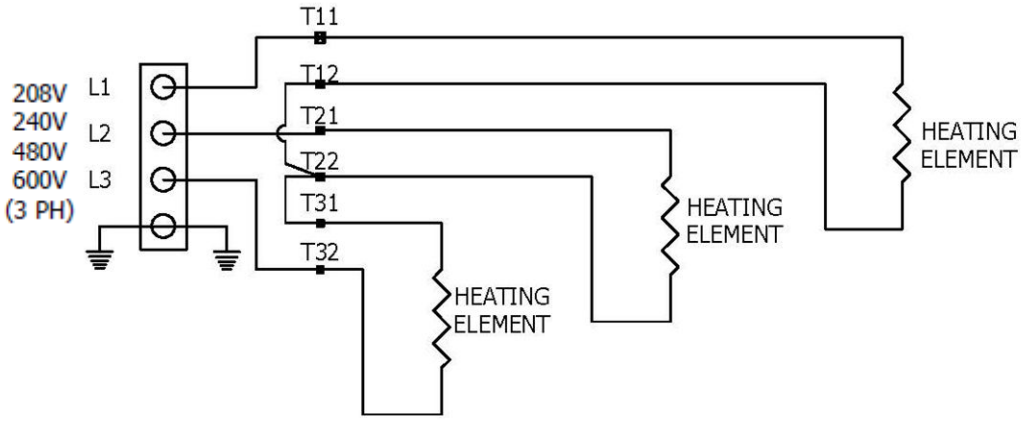

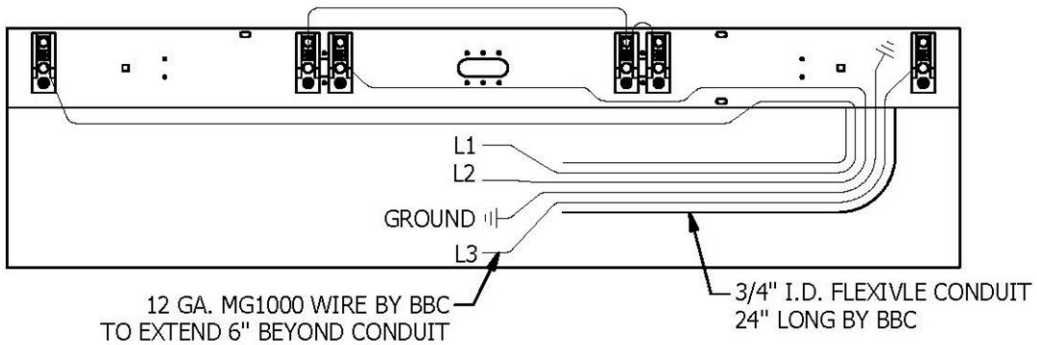

OPERATION:



Heaters must be properly installed before use.

Do not operate heaters without all covers in place.

No user maintenance is needed for heaters. Any other servicing should be performed by authorized service personnel.

During production, the heating element of this unit may have absorbed moisture. The first time your heater is turned ON, it may smoke/steam while the moisture is released. This smoke/steam is NORMAL and not harmful. It will stop after 10-15 minutes of operation and not occur after first use.