MEP-HT-IMC-3

Power Connection; Multiple Heating Cables

Product Description

The MEP-HT-IMC-3 is designed for pipe mounted power connection of CRGX, LSRX, MSRX and HSRX cables. Third party approved for ordinary area and DIV 2 hazardous areas. Provided with cold applied core sealing, ¾ inch NPT conduit hole and spring terminals to accept up to #8 AWG wiring.



Dimensions

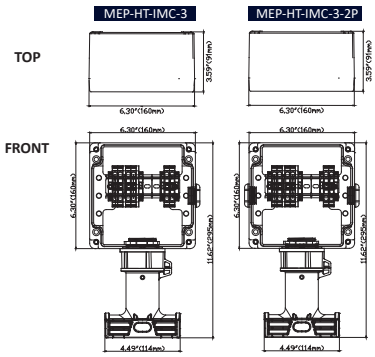

Certification / Approvals

FM26US0013X, FM26CA0003X
Hazardous (classified) locations, indoors and outdoors
Class I, Division 2, Groups A, B, C, and D*
Class II/III, Division 2, Groups F and G*
Class I, Zone 1, AEx/Ex eb IIC* Gb
Zone 21, AEx/Ex tb IIIC* Db
Type 4X, IP66
* For T-rating please refer to cable documentation

FM C US APPROVED

Specifications

	MEP-HT-IMC-3	MEP-HT-IMC-3-2P
	Power Connection for a maximum of three self-regulating heating cables	Dual Power Connection for two self-regulating heating cable circuits
Heating cable capability (No. of heating cable entry)	LSRX, CRGX, MSRX, HSRX (Up to three heating cables)	LSRX, CRGX, MSRX, HSRX (Two heating cable circuits)
Supply voltage	100 ~ 277V	100 ~ 277V
Ingress protection	NEMA Type 4X, IP66	NEMA Type 4X,IP66
Ambient temperature range	-40°F ~ 131°F (-40°C ~ 55°C)	-40°F ~ 131°F (-40°C ~ 55°C)
Minimum installation temperature	-40°F (-40°C)	-40°F (-40°C)
Through hole for conduit	3/4NPT X 1	3/4NPT X 2
Maximum conductor sizes	8AWG (10mm²)	8AWG (10mm²)
Maximum circuit breaker size	50A	50A

[Note] MEP-HT-IMC-3 requires Marley Engineered Products MEP-HT-SPK-NPT34 Sealing Plug Kit for splice, tee connection or end termination.

Material information

Contents	1 MEP-HT-IMC-3 series junction box assembly with terminal blocks 1 Pipe stand and O-ring 1 Compression cap, square-ring, locknut 3 Grommets(S, M, L) for different cable sizes 3 Core sealers 3 Insulation tubes 1 RTV sealant 1 Wrench 1 Cable tie
Enclosure material	Glass reinforced polymer junction box Glass reinforced polymer lid with stainless steel screws Glass reinforced polymer box stand
Installation accessories (Sold separately)	Conduit and fittings Sealing plug kit Pipe straps Fiberglass tape Aluminum tape
Tools required	Wire cutters, Utility knife, Marking pen Large slotted screwdriver 3/16"(or 5mm) hex key Adjustable pliers, Needle nose pliers

[NOTE] Refer to the MEP-HT Kit Installation Instructions for full and current material details.

MEP-HT-IPC-1

Power Connection; Single Heating Cables

Product Description

The MEP-HT-IPC-1 is designed for pipe mounted power connection, splice or tee of up to (3) CRGX, LSRX, MSRX or HSRX cables. Third party approved for ordinary area and DIV 2 hazardous areas. Provided with cold applied core sealing, ¾ inch NPT conduit hole and spring terminals to accept up to #8 AWG wiring.

Certification / Approvals

FM26US0013X, FM26CA0003X
Hazardous (classified) locations, indoors and outdoors
Class I, Division 2, Groups A, B, C, and D*
Class II/III, Division 2, Groups F and G*
Class I, Zone 1, AEx/Ex eb IIC* Gb
Zone 21, AEx/Ex tb IIIC* Db
Type 4X, IP66
* For T-rating please refer to cable documentation



Dimensions

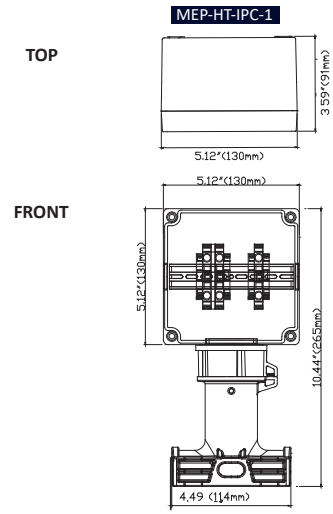

Specifications

	MEP-HT-IPC-1
Application	Power Connection for single heating cable
Heating cable capability (No. of heating cable entry)	LSRX, CRGX, MSRX, HSRX (One heating cable)
Supply voltage	100 ~ 277V
Ingress protection	NEMA Type 4X, IP66
Ambient temperature range	-40°F ~ 131°F
Minimum installation temperature	-40°F (-40°C)
Through hole for conduit	3/4" NPT
Maximum conductor sizes	8AWG
Maximum circuit breaker size	50A

[Note] MEP-HT-IPC-1 requires Marley Engineered Products HT-SPK-NPT34 Sealing Plug Kit for splice, tee connection or end termination.

Material information

Contents	1 MEP-HT-IPC-1 series junction box assembly with terminal blocks 1 Pipe stand and O-ring 1 Compression cap, square-ring, locknut 3 Grommets(S, M, L) for different cable sizes 1 Core sealer 1 Insulation tube 1 RTV sealant 1 Wrench 1 Cable tie
Enclosure material	Glass reinforced polymer junction box Glass reinforced polymer lid with stainless steel screws Glass reinforced polymer box stand
Installation accessories (Sold separately)	Conduit and fittings Sealing plug kit Pipe straps Fiberglass tape Aluminum tape
Tools required	Wire cutters, Utility knife, Marking pen Large slotted screwdriver 3/16"(or 5mm) hex key Adjustable pliers, Needle nose pliers

[NOTE] Refer to the MEP-HT Kit Installation Instructions for full and current material details.

MEP-HT-IST-1

Splice or Tee Connection, End termination

Product Description

The MEP-HT-IST-1 is designed for pipe mounted splice or tee of up to (3) CRGX, LSRX, MSRX and HSRX cables. Third party approved for ordinary area and DIV 2 hazardous areas. Provided with cold applied core sealing and spring terminals to accept up to #8 AWG wiring.

Certification / Approvals

FM26US0013X, FM26CA0003X
Hazardous (classified) locations, indoors and outdoors
Class I, Division 2, Groups A, B, C, and D*
Class II/III, Division 2, Groups F and G*
Class I, Zone 1, AEx/Ex eb IIC* Gb
Zone 21, AEx/Ex tb IIIC* Db
Type 4X, IP66
* For T-rating please refer to cable documentation

FM APPROVED



Dimensions

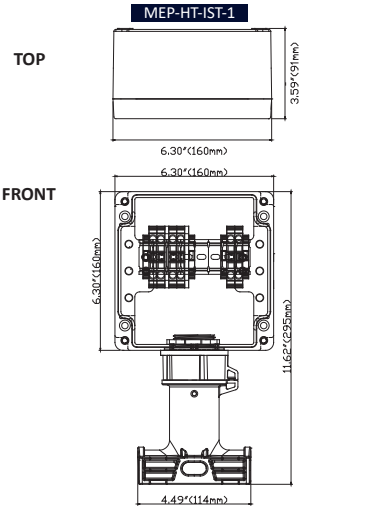

Specifications

	MEP-HT-IST-1
Application	Splice or Tee Connection, End Termination
Heating cable capability (No. of heating cable entry)	LSRX, CRGX, MSRX, HSRX (Up to three heating cables)
Supply voltage	100 ~ 277V
Ingress protection	NEMA Type 4X, IP66
Ambient temperature range	-40°F ~ 131°F (-40°C ~ 55°C)
Minimum installation temperature	-40°F (-40°C)
Through hole for conduit	N/A
Maximum conductor sizes	8AWG (10mm²)
Maximum circuit breaker size	50A

Material information

Contents	1 MEP-HT-IST-1 series junction box assembly with terminal blocks 1 Pipe stand and O-ring 1 Compression cap, square-ring, locknut 3 Grommets(S, M, L) for different cable sizes 3 Core sealers 3 Insulation tubes 1 RTV sealant 1 Wrench 1 Cable tie
Enclosure material	Glass reinforced polymer junction box Glass reinforced polymer lid with stainless steel screws Glass reinforced polymer box stand
Installation accessories (Sold separately)	Conduit and fittings Pipe straps Fiberglass tape Aluminum tape
Tools required	Wire cutters, Utility knife, Marking pen Large slotted screwdriver 3/16"(or 5mm) hex key Adjustable pliers, Needle nose pliers

[NOTE] Refer to the MEP-HT Kit Installation Instructions for full and current material details.

MEP-HT-IES-1

End Seal or In-line Splice Connection

Product Description

The MEP-HT-IES-1 is designed for pipe mounted, above insulation, end termination or splice of up to (2) CRGX, LSRX, MSRX and HSRX cables. Third party approved for ordinary area and DIV 2 hazardous areas. Provided with cold applied end sealing cap.

Certification / Approvals

FM26US0013X, FM26CA0003X
Hazardous (classified) locations, indoors and outdoors
Class I, Division 2, Groups A, B, C, and D*
Class II/III, Division 2, Groups F and G*
Class I, Zone 1, AEx/Ex eb IIC* Gb
Zone 21, AEx/Ex tb IIIC* Db
Type 4X, IP66
* For T-rating please refer to cable documentation

FM APPROVED



Dimensions

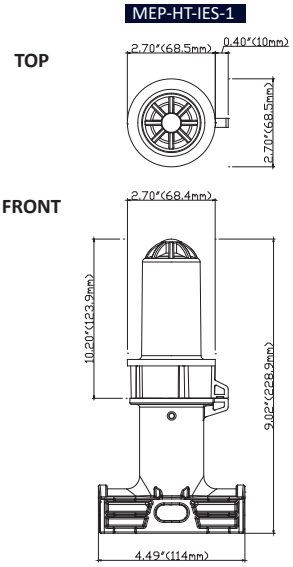

Specifications

	MEP-HT-IES-1
Application	End Seal / In-line Splice Connection
Heating cable capability (No. of heating cable entry)	LSRX, CRGX, MSRX, HSRX (Up to two heating cables)
Supply voltage	100 ~ 277V
Ingress protection	NEMA Type 4X, IP66
Ambient temperature range	-40°F ~ 131°F (-40°C ~ 55°C)
Minimum installation temperature	-40°F (-40°C)

Material information

Contents	1 End cap 1 Pipe stand and O-ring 3 Grommets(S, M, L) for different cable sizes 2 Rubber end caps 1 RTV sealant 1 Wrench 1 Cable tie
Required for splice connection (Sold separately)	MEP-HT-SK-1, consists of: 2 Core sealers (S) 2 Insulation tubes Y/G (S) 3 Closed end connectors 1 RTV sealant
Enclosure material	Glass reinforced polymer end cap Glass reinforced polymer pipe stand
Installation accessories (Sold separately)	Pipe straps Fiberglass tape Aluminum tape
Tools required	Wire cutters, Utility knife, Marking pen Large slotted screwdriver Adjustable pliers, Needle nose pliers Molex RHT-7000 crimp tool or equivalent; 10-16AWG slot (For in-line splice connection only)

[NOTE] Refer to the MEP-HT Kit Installation Instructions for full and current material details.