MUH SERIES
Unit Heater





Technical Specifications:

Temp Range: 40°–90°F
CFM: 350–3000

Ideal Spaces:

Factories
Warehouses
Garages
Stairwells
Shipping Docks
Power Stations
Mechanical Rooms

Beige Bronze

- Wide range of optional control kits are field-installable, increasing the unit's adaptability to specification market
- Small- to medium-case construction is 20-gauge steel with larger cabinet 18-gauge steel; completely enclosed fan motor
- Advanced pull-through air flow design draws air across heating element for even air distribution and cooler element operation
- Specially designed venturi outlet to meet required additional air throw in vertical position
- Branch circuit fusing (when required)
- Optional fan-only switch for air movement with no heat
- 1- or 3-phase wiring on 5 kW through 10 kW 208/240V and 15 kW 208V units (field-interchangeable)
- Aluminum-finned, copper-clad steel sheath heating element extends life due to cooler sheath temperature and faster heat dissipation
- 24V control transformer standard on most models, providing safer and more accurate means of temperature control. 3 kW and 5 kW, 208-277V, have line voltage controls as standard (24V control available on made-to-order basis)
- Automatic reset linear thermal cut-out, capillary type, provides protection over entire length of element areas (manual reset protection available on made-to-order basis)
- No piping flues, valves or traps needed for installation
- Individual stainless steel adjustable louvers to direct air flow

c UL us

5 YEAR WARRANTY ELEMENT

1 YEAR WARRANTY WORKMANSHIP

MUH SERIES
Unit Heater

Models & Specifications:

	ITEM INFORMATION		ELECTRICAL DATA						AIR DELIVERY DATA FAN MOTOR DATA	
	CATALOG NO.	UPC	VOLTS	PHASE	KW	AMPS	BTU/HR.	CONTROL VOLT	CFM	SHIP WT.*
◆	MUH0381	685360047218	208	1	3	14.5	10	208	350	27 lbs
◆	MUH0581	685360047287	208	1-3	5	24	17	208	350	27 lbs
◆	MUH078	685360047355	208	1-3	7.5	36	26	24	650	38 lbs
◆	MUH108	685360047416	208	1-3	10	48	34	24	650	38 lbs
◆	MUH158	685360047454	208	1-3	15	72	51	24	910	53 lbs
◆	MUH0321	685360047164	208/240	1-3	2.2/3.0	11.0/12.5	8/10	208/240	350	27 lbs
◆	MUH0521	685360047225	208/240	1-3	3.7/5.0	18.0/21.0	13/17	208/240	350	27 lbs
◆	MUH072	685360047300	208/240	1-3	5.6/7.5	27.0/31.3	19/26	24	650	38 lbs
◆	MUH102	685360047362	208/240	1-3	7.5/10.0	36.0/42.0	26/34	24	650	38 lbs
◆	MUH152	685360047423	208/240	3	11.2/15.0	31.3/36.1	38/51	24	910	53 lbs
◆	MUH0371	685360047201	277	1	3	11	10	277	350	27 lbs
◆	MUH0571	685360047270	277	1	5	18	17	277	350	27 lbs
◆	MUH077	685360047348	277	1	7.5	27	26	24	650	38 lbs
◆	MUH0341	685360047188	480	3	3	3.6	10	24	350	27 lbs
◆	MUH0541	685360047256	480	3	5	6	17	24	350	27 lbs
◆	MUH074	685360047324	480	3	7.5	9	26	24	650	38 lbs
◆	MUH104	685360047386	480	3	10	12	34	24	650	38 lbs
◆	MUH154	685360047430	480	3	15	18	51	24	910	53 lbs
●	MUH208	685360047492	208	3	20	56	68	24	1320	60 lbs
●	MUH202	685360047461	208/240	3	15.0/20.0	41.2/48.0	51/68	24	1320	60 lbs
●	MUH204	685360047478	480	3	20	24	68	24	1320	60 lbs
●	MUH254	685360047515	480	3	25	30	85	24	2100	93 lbs
●	MUH304	685360047546	480	3	30	36	102	24	2100	93 lbs
●	MUH404	685360047614	480	3	40	48	137	24	3000	114 lbs
●	MUH504	685360047645	480	3	50	60.2	171	24	3000	114 lbs
●	MUH308	685360047560	208	3	30	84	102	24	2100	93 lbs
●	MUH252	685360047508	208/240	3	18.7/25.0	52.0/60.0	64/85	24	2100	93 lbs
●	MUH302	685360047539	208/240	3	22.5/30.0	63.0/72.3	77/102	24	2100	93 lbs
●	MUH402	685360047607	208/240	3	30.0/40.0	83.4/96.4	102/137	24	3000	114 lbs
●	MUH502	685360047638	208/240	3	37.5/50.0	104.2/120.4	128/171	24	3000	114 lbs
●	MUH107	685360047409	277	1	10	36	34	24	650	38 lbs
●	MUH073	685360047317	347	1	7.5	21.6	26	24	650	38 lbs
●	MUH103	685360047379	347	1	10	28.8	34	24	650	38 lbs
●	MUH0361	685360047195	600	3	3	2.9	10	24	350	27 lbs
●	MUH0561	685360047263	600	3	5	4.8	17	24	350	27 lbs
●	MUH076	685360047331	600	3	7.5	7.3	26	24	650	38 lbs
●	MUH106	685360047393	600	3	10	9.7	34	24	650	38 lbs
●	MUH156	685360047447	600	3	15	14.5	51	24	910	53 lbs
●	MUH206	685360047485	600	3	20	19.3	68	24	1320	60 lbs
●	MUH256	685360047522	600	3	25	24.2	85	24	2100	93 lbs
●	MUH306	685360047553	600	3	30	29	102	24	2100	93 lbs
●	MUH406	685360047621	600	3	40	38.7	137	24	3000	114 lbs
●	MUH506	685360047652	600	3	50	48.3	171	24	3000	114 lbs

SKU Legend: ◆ **= Popular Products;** ● **= Extended Offering** (Contact your local Marley Sales Representative for typically associated lead times)

"1-3" phase denotes field convertible to 3-Phase

NOTE: All standard units are supplied with a low voltage control transformer and contactor (24V). Reference the appropriate Bundled Accessory table below for the standard accessories available out of the box with each PRO and PRO+ model.

Optional Accessories:

Scan the QR code to access additional specs and features

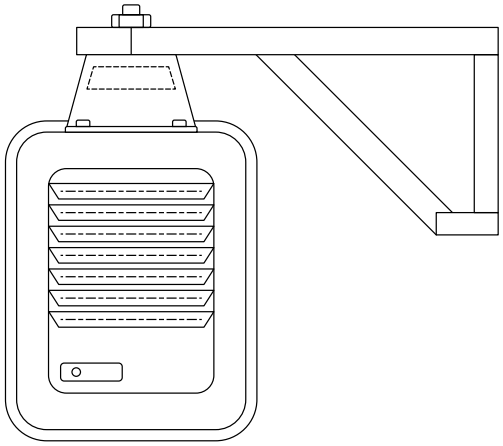

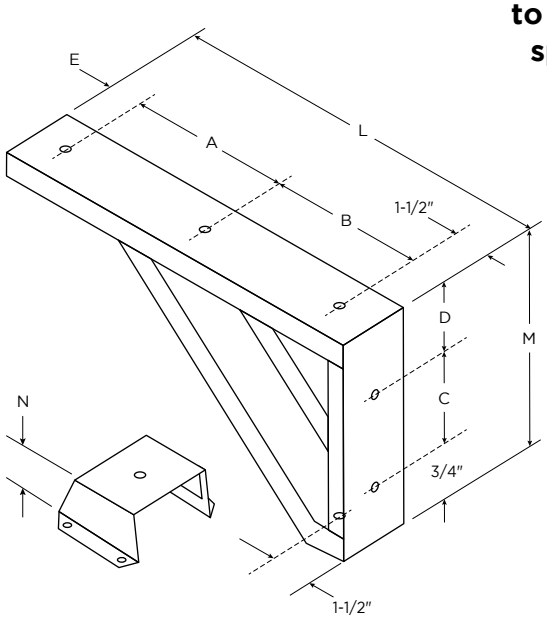

	3–20 kW	25–50 kW
A	7 ¼"	9 7⁄16"
B	9 ½"	14 ⅜"
C	7 ¼"	12 ⅛"
D	11 5⁄16"	2 1⁄16"
E	2 ¼"	3"
L	20 ½"	28 15⁄16"
M	9 15⁄16"	14 15⁄16"
N	3 ¼"	4 ½"

Optional Mounting Brackets:

	CATALOG NO.	UPC	COMPATIBILITY	SHIP WT.*
Standard	B10	685360152295	MUH03–10	8 lbs
	MCB105PK	685360173627	(Master Pack, Five B10 Brackets)	
	B20	685360152301	MUH15 & 20	10 lbs
	B30	685360152318	MUH25 & 30	13 lbs
	B50	685360152325	MUH40 & 50	15 lbs
Ceiling	CMB10	685360152363	MUH03–10	3 lbs
	CMB20	685360152370	MUH15 & 20	4 lbs
	CMB30	685360152387	MUH25 & 30	5 lbs
	CMB50	685360152394	MUH40 &50	6 lbs
Vertical Ceiling	VDMB5	685360152462	MUH03–05	5 lbs
	VDMB20	685360152455	MUH07–20	7 lbs
	VDMB50	685360152479	MUH25–50	9 lbs
Remote Thermostats	MUHBKT-TST-SM	685360175089	MUH 3–20kw	2 lbs
	MUHBKT-TST-L	685360175096	MUH 25-50kw	2 lbs

MOUNTING LIMITATIONS: Unit heaters should not be used in potentially explosive atmospheres. The finish is not intended for direct salt spray exposure in marine applications or the highly corrosive atmospheres of swimming pools, chemical storage bins, etc. Do not install unit heaters above recommended maximum mounting height. Obstructions must not block unit heater air inlet or discharge. Heaters must be mounted at least 7 ft. above the floor to prevent accidental contact with the heating element or fan blade which could cause injury.

Optional Dust Shields:

CATALOG NO.	UPC	COMPATIBILITY	SHIP WT.*
JRDS8	685360150697	3–5 KW units	5 lbs
JRDS14	685360150673	15–20 KW units	6 lbs
JRDS19	685360150680	25–50 KW units	10 lbs

Diffuser Selector Table:

CATALOG NO.	UPC	COMPATIBILITY	SHIP WT.*
MUHLDS	685360036656	Louvered Diffuser for 3 & 5KW Units	5 lbs
MUHLDM	685360036649	Louvered Diffuser for 7.5–20KW Units	8 lbs
MUHLDL	685360036632	Louvered Diffuser for 25–50KW Units	10 lbs

Optional Field-Installed Electrical Controls:

CATALOG NO.	UPC	DESCRIPTION	ELECTRICAL RATING
UHMT1*	685360152417	Single Pole Internal Thermostat-Temp Range: 40°– 85°F	25A @ 120, 240VAC Res. 22A @ 277VAC Res.
UHMT2	685360152424	Two Stage Internal Thermostat-Temp. Range: 40°–85°F	25A @ 120, 240VAC Res. 22A @ 277VAC Res. 125VA
MCFS	685360046372	Internal Summer Fan Switch 250, 480, 600V.A.C. 1,2 OR 3 PH	Pilot Duty 6A, 600VAC Res. 2 HP
MRFS1	685360047089	Remote Summer Fan Switch (Line Voltage)	2 HP, 250-480VAC
MRFS2	685360047096	Remote Summer Fan Switch with Relay (24V Coil-Single Pole Normally Open)	6 AFL, 35 ALR, 250VAC, 60Hz. 3 AFL, 18 ALR, 480VAC, 60Hz
MHRT	685360046945	Heat Recovery Thermostat with Relay (24V Coil-Single Pole Normally Open) Hi — 120°F, Low — 60°F	6 AFL, 35 ALR, 250VAC, 60Hz 3 AFL, 18 ALR, 480VAC, 60Hz
MPDS25	685360047034	Power Disconnect Switch (3-Pole)	30A @ 600VAC, Res.
MPDS60	685360047041	Power Disconnect Switch (3-Pole)	80A @ 600VAC, Res.

*"-S" version available as a suitable alternative

NOTE: Any field installed options assembled in the factory require added surcharge. See price book for charges. MPDS60 disconnect switch is not suitable for field installation on 7.5kw and 10kw unit heaters. Visit website or contact your local representative for compatibility details.

Diffusers for Vertical Mounting:

No Diffuser:
No diffuser needed where a straight downflow air pattern is required. For maximum air throw, remove louvers. Any of three diffusers can be added to basic heater.

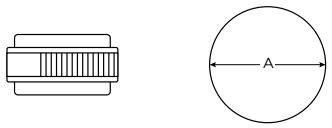

Louver Diffuser:
Permits directional (straight line) air flow as in air curtain application over doorways. Rectangular coverage, Louvers can be turned in either direction.

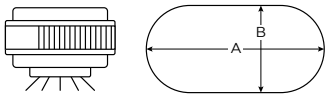

NOTE: Visit website or contact your local representative for additional details

Suggested Controls



Now compatible with SmartSeries Plus when used with 24VAC control transformer!