470 Beauty Spot Rd. E
Bennettsville, SC 29512

SUBMITTAL SHEET
THZ SERIES SSR CONTROL PANELS

INDUSTRIAL/COMMERCIAL/ RESIDENTIAL CONTROLS



CAPACITIES
Power Supply Voltage: 120-480V 1 & 3P Control Voltage: 24vdc NEMA Type 1 and NEMA Type 3R enclosures 1-20 Zone Control GFI protection

See Selection Chart for all Options

THZ SERIES SSR CONTROL PANELS

JOB NAME: _____

LOCATION: _____

ARCHITECT: _____

ENGINEER: _____

CONTRACTOR: _____

SUBMITTED BY: _____ DATE: _____

TAG/ITEM	QTY.	CATALOG NUMBER	# OF ZONES / CIRCUITS	INCOMING VOLTAGE & PHASE	OUTGOING VOLTAGE & PHASE	CONTROL VOLTAGE	ENCLOSURE TYPE (1/3R)	GFI (Y/N)

ACCESSORIES AND CONTROLS	TAG/ITEM	QTY.	CATALOG NUMBER	DESCRIPTION

SUBMITTED BY:	DATE

APPROVED BY:	DATE

ARCHITECT'S AND ENGINEER'S SPECIFICATIONS*

SSR Control Panel

THZ Series SSR Control Panels shall be supplied QMark®, a Marley Engineered Products® Brand, Bennettsville, SC, USA, and shall be of the voltage, phase, and circuits specified in the schedule. They shall be certified to cULus listed under standard 2021. QMark's SSR Panels are the most effective method of controlling your Thermazone, Thermazone Thin, and FRP/FRS heaters, among a wide variety of other units as well. Each SSR Panel model is designed to allow for field designation of one or multiple zones, offering complete customization when controlling heaters individually or in groups. Each 30A SSR is able to carry one or several heaters. These SSR panels are often partnered with rheostats or cycle timers, but may also be controlled with thermostats, on/off switches, timers, and other 24vdc controllers. QMark® SSR panels are factory wired for quick and efficient installations and offer an efficient solution for every project. Custom SSR panels available upon request.

Solution Overview

- Nema Type 1 standard w/ Type 3R enclosure available, cULus listed and labeled.
- 24vdc Control Voltage.
- Suitable for rheostats or cycle timers, and other higher cycle controllers
- Single and Three phase panels available with 30A SSR in 2, 5, 10 or 20 circuit designs. Supply voltage from 120–480V.
- Single and multi-zone control capability.
- Nothing to program, all the intelligence is in the low voltage control.
- GFI Protection can be added to all SSR's in the 2SR, 5SR, or 10SR Sizes

**Qmark reserves the right to change specifications without prior notice.*

Models & Specifications – SSR Panel:

	ITEM INFORMATION		ELECTRICAL DATA		ENCLOSURE SIZE (H x W x D)			
	CATALOG NO.	DESCRIPTION	SUPPLY VOLTAGE	PHASE	TYPE 1	TYPE 1 "-GFI"	TYPE 3R "-3R"	TYPE 3R "-3R-GFI"
1-Circuit Panel	QR-THZ-S30-1SR-24DC	1 SSR, 30amps each, 24vdc control	120-480	1	20" x 16" x 8"	30" x 24" x 6"	20" x 16" x 8"	24" x 20" x 6"
	QR-THZ-T30-1SR-24DC	1 SSR, 30amps each, 24vdc control	208-480	3	20" x 16" x 8"	30" x 24" x 6"	20" x 16" x 8"	24" x 20" x 6"
2-Circuit Panel	QR-THZ-S30-2C-0	2 SSR's, 30amps each, 24vdc control	120–480	1	20" x 16" x 8"	30" x 24" x 6"	20" x 16" x 8"	24" x 20" x 6"
	QR-THZ-T30-2C-1	2 SSR's, 30amps each, 24vdc control	208–480	3	20" x 16" x 8"	30" x 24" x 6"	20" x 16" x 8"	24" x 20" x 6"
5-Circuit Panel	QR-THZ-S30-5SR-24DC	5 SSR's, 30amps each, 24vdc control	120–480	1	20" x 20" x 8"	30" x 24" x 8"	30" x 24" x 8"	30" x 24" x 8"
	QR-THZ-T30-5SR-24DC	5 SSR's, 30amps each, 24vdc control	208–480	3	24" x 20" x 8"	30" x 24" x 8"	30" x 24" x 8"	30" x 24" x 8"
10-Circuit Panel	QR-THZ-S30-10SR-24DC	10 SSR's, 30amps each, 24vdc control	120–480	1	30" x 24" x 8"	30" x 24" x 8"	30" x 24" x 8"	36" x 30" x 8"
	QR-THZ-T30-10SR-24DC	10 SSR's, 30amps each, 24vdc control	208–480	3	30" x 24" x 8"	30" x 24" x 8"	30" x 24" x 8"	36" x 30" x 8"
20-Circuit Panel	QR-THZ-S30-20SR-24DC	20 SSR's, 30amps each, 24vdc control	120–480	1	36" x 24" x 8"	—	42" x 30" x 8"	—
	QR-THZ-T30-20SR-24DC	20 SSR's, 30amps each, 24vdc control	208–480	3	36" x 30" x 8"	—	42" x 30" x 8"	—

Add "-3R" to Catalog No. to upgrade the Contactor Panel or SSR Panel to a Type 3R enclosure.
Add "-GFI" to Catalog No. GFI protection to the control panel.

MODEL	DESCRIPTION
-3R	Upgrade the Contactor Panel or SSR Panel to a Type 3R enclosure
-GFI	GFI protection to the control panel

Optional Compatible Controls:

CATALOG NO.	DESCRIPTION	SUPPLY VOLTAGE	PHASE	AMP RATING	SUITABLE WITH		
					CONTACTOR PANEL	STAND ALONE	SSR PANEL
TZ-REM-PT	Fixed Cycle Controller w/ Adjustable Output	120/24	1	NA	—	—	Yes
TZ-PCT	Adjustable Cycle Controller w/ Adjustable Output	120/240	1	28	Yes	Yes	Yes
TZ-TIMER	0–60 Min Heavy Duty In-Wall On/Off Timer	120/240	1	28	Yes	Yes	Yes
TZ-TIMER2HR	0–120 Min Heavy Duty In-Wall On/Off Timer	120/240	1	20	Yes	Yes	Yes
TZ-HUB	App Based Z-Wave Wireless Connection Hub	120	1	NA	Yes	Yes	Yes
TZ-SWITCH	App Based Z-Wave Wireless Junction Box	120/240	1	40	Yes	Yes	Yes
TZ-REMOTE	Z-Wave Compatible Wireless Switch/Wall Remote	Battery	—	NA	—	—	—

Optional controls suitable for isolated control of your heater(s), or to be paired with QMark's line of control panels to operate banks of heaters together. Options range from adjustable output cycle timers with fixed and adjustable cycle times, to standard on/off timer control, and introducing market leading Z-Wave app based control for easy operation from your phone.

Approvals: _____ _____ _____

THZ SERIES SSR CONTROL PANELS

How to Order

Example:

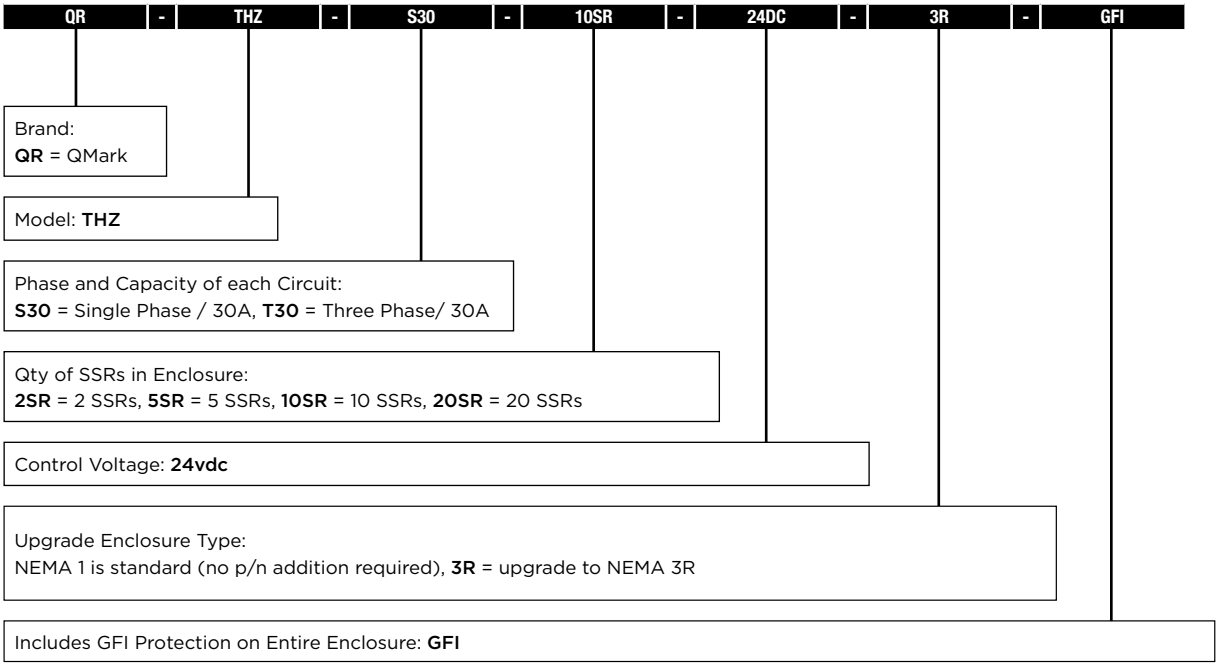

Approvals: _____ _____ _____

THZ SERIES SSR CONTROL PANELS

Models & Specifications — SSR Panel:

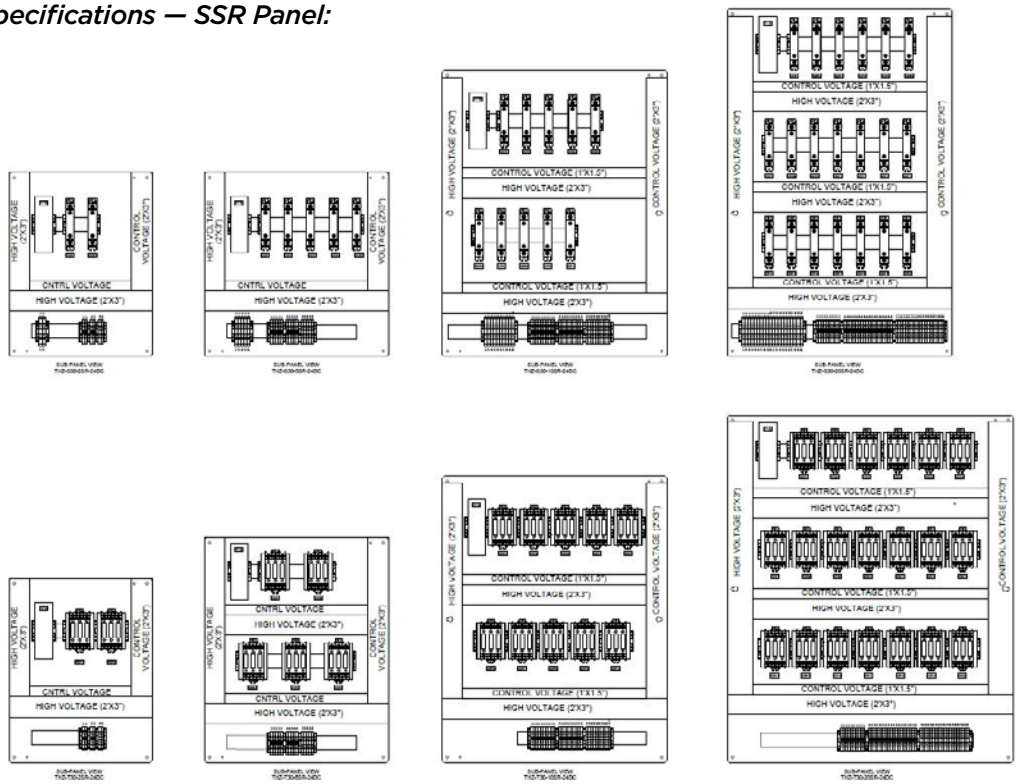

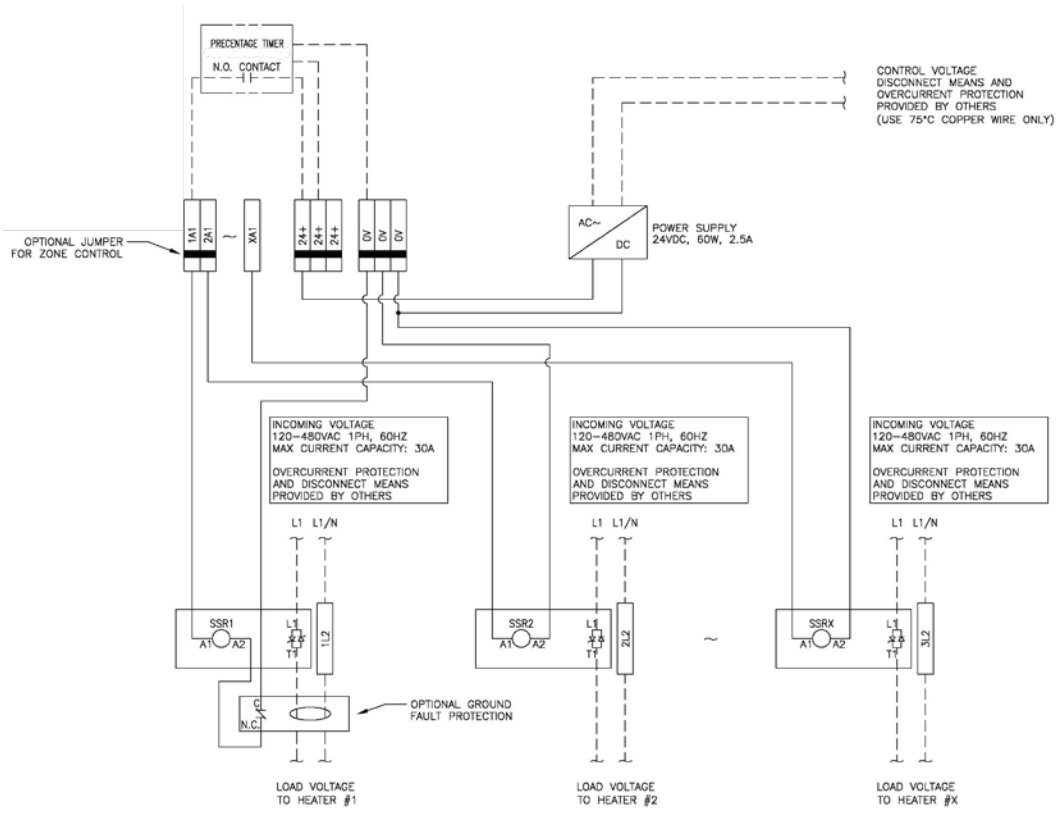

No matter the industry or application, Marley Engineered Products has a robust portfolio of innovative, reliable, high-performance comfort heating and ventilation solutions for all your heating needs.

For more information or assistance on your next project, contact Technical Services at 800-642-4328

Scan the QR code to access additional specs and features

Approvals: _____ _____ _____