470 Beauty Spot Rd. E
Bennettsville, SC 29512

SUBMITTAL SHEET
DBSL SERIES
SLIMLINE ALUMINUM CONVECTOR

See Selection Chart for Options

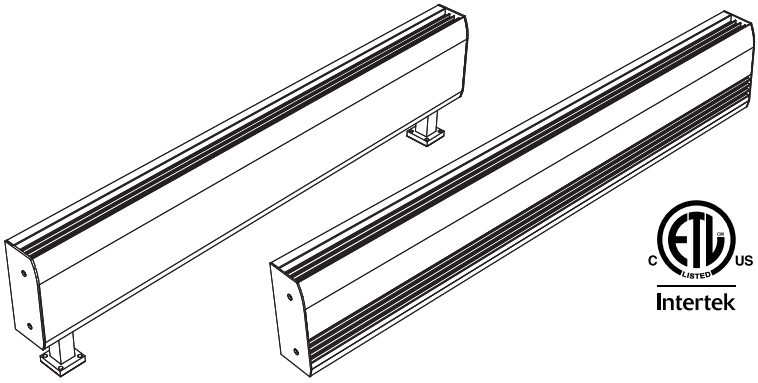

JOB NAME: _____

LOCATION: _____

ARCHITECT: _____

ENGINEER: _____

CONTRACTOR: _____

SUBMITTED BY: _____ DATE: _____

TAG/ITEM	QTY.	CATALOG NUMBER	HEATER		AMPS	LENGTH	BUILT-IN CONTROLS
			KW	VOLTS			

ACCESSORIES AND CONTROLS	TAG/ITEM	QTY.	CATALOG NUMBER	DESCRIPTION

SUBMITTED BY:	DATE

APPROVED BY:	DATE

ARCHITECT'S AND ENGINEER'S SPECIFICATIONS*

Furnish and install, where indicated on plans, DBSL Series convector type heaters, suitable for continuous operation, as manufactured by QMark,® A Marley Engineered Products® Brand, Bennettsville, SC.

ENCLOSURE: Shall be 12-gauge (.080" min.) aluminum extrusion. The one-piece back and bottom shall join to the one-piece top and front utilizing Qmark's Snap-Lock design. Both inlet and outlet air grilles shall be punched pencil-proof slots negating the need for mesh under the grille.

SIZE: Heaters shall be low profile (2 ¾" x 6") and available in length from 24 inches through 10 feet. Additionally, custom length cabinets up to 10 feet with a single heat deck shall be furnished as specified.

HEATING LENGTHS AND VOLTAGES: Heater lengths, voltages and wattage capacities shall be as indicated on the plans.

FINISH: The top and front shall be finished with polyester powder paint or anodized. Units are available with an optional finished back.

HEATING ELEMENTS: The nickel-chromium heating element wire shall be encased in a steel sheath for maximum, trouble-free element life. Aluminum fins shall be pressure bonded to the steel sheath. Elements shall be centered anchored and shall float freely at each end through high-temperature Noryl bushings.

CONTROL SECTIONS: Control sections, finished to match heaters, shall be furnished as an optional accessory for field installation of controls, or shall be used to house factory-installed controls as specified.

OPTIONAL BUILT-IN CONTROLS: Thermostats, power relay, low-voltage control relays, and power on/off switches, singly or in combination, may be specified for factory installation in heaters. Thermostats and power on/off switches are accessible through the grille.

PEDESTALS: The heater shall be convertible for use as a self-standing unit with pedestal conversion kit. Pedestals shall be painted steel or anodized aluminum. Pedestals can either be mounted on or embedded in the floor surface, and wiring or conduit brought through the pedestal during installation.

**QMark reserves the right to change specifications without prior notice.*

Approvals: _____ _____ _____

DBSL SERIES

Lengths

Length	2′	28″	3′	4′	5′	6′
Shipping Weight	8 lbs	8 lbs	10 lbs	13 lbs	17 lbs	20 lbs

NOTE: Additional cabinet sizes available up to 10 ft. length. Backs are provided standard with no finish. For finished backs, add 10% to list price. Knockouts on back omitted by request only. All models are non-stock, made-to-order. Consult sales representative for more information on specs and lead times.

*Watts per Ft.**

100	125	150
188	250	

*Voltages**

120	208	240
277	347	600

*Specs vary by length. Refer to the submittal sheet for full details.

Blank Section & Accessories:

CATALOG NO.	DIMENSIONS (W x H x L)	INLET	SHIP WT.
SLCBS1F	2 ¾″ x 6″ x 1′	Front	4 lbs
SLCBS1B		Bottom	
SLCBS2F	2 ¾″ x 6″ x 28″	Front	7 lbs
SLCBS2B		Bottom	
SLCBS3F	2 ¾″ x 6″ x 3′	Front	9 lbs
SLCBS3B		Bottom	
SLCBS4F	2 ¾″ x 6″ x 4′	Front	12 lbs
SLCBS4B		Bottom	
SLCBS5F	2 ¾″ x 6″ x 5′	Front	16 lbs
SLCBS5B		Bottom	
SLCBS6F	2 ¾″ x 6″ x 6′	Front	19 lbs
SLCBS6B		Bottom	

NOTE: Blank section grilles are not punched unless requested. Additional sections available for cabinets up to 10 ft. length.



Bottom inlet unit is only 2 ¾ in. wide by 6 in. tall. Can be mounted to wall (3 in. above floor) or in front of window mounted on pedestals.



Front inlet unit is only 2 ¾ in. wide by 6 in. tall. Can be mounted to wall or directly to floor.



Hollow pedestals are 3 in. tall and allow concealed wiring access when stubbed through concrete floors.

CATALOG NO.	DESCRIPTION	ADDITIONAL SPACE REQUIRED	SHIP WT.
SLCECL	End Cap - Left	⅛″	1 lbs
SLCECR	End Cap - Right	⅛″	1 lbs
SLCICF	Inside Corner-Front In	8 ½″	5 lbs
SLCICB	Inside Corner-Bottom In	8 ½″	5 lbs
SLCOCF	Outside Corner-Front In	5″	4 lbs
SLCOCB	Outside Corner-Bottom In	5″	4 lbs
SLCDESBL	Dec. End Section-Bottom In, Left	9 ⅜₄″	5 lbs
SLCDESBR	Dec. End Section-Bottom In, Right	9 ⅜₄″	5 lbs
SLCDESFL	Dec. End Section-Front In, Left	9 ⅜₄″	4 lbs
SLCDESFR	Dec. End Section-Front. In, Right	9 ⅜₄″	4 lbs
SLCSP	Splice Plate	0–¼″	1 lbs
SLCFL3	Filler Section 3 in.	0–3″	1 lbs
SLCFL6	Filler Section 6 in.	3–6″	1 lbs
SLCFL9	Filler Section 9 in.	6–9″	1 lbs
SLCFL12	Filler Section 12 in.	9–12″	1 lbs
SLCFL18	Filler Section 18 in.	12–18″	1.5 lbs
SLCFL24	Filler Section 24 in.	18–24″	1.5 lbs
SLCDRF	Receptacle Section-Front In	4 ½″	1.5 lbs
SLCDRB	Receptacle Section-Bottom In	4 ½″	1.5 lbs
SLCPEF	Pneu/Ele Sw-Front In	4 ½″	2 lbs
SLCPEB	Pneu/Ele Sw-Bot. In	4 ½″	2 lbs
SLCPK3A**	Architectural Pedestal	—	2 lbs
SO1A***	Stand-Off Bracket	—	1 lbs

* Add suffix -P for painted followed by the appropriate color code (i.e. W for white, B for black, etc.), -C for clear anodized

** One pedestal. Two pedestals required on units up to 10 ft. and three required on units over 10 ft.

*** Beige is standard.

Dimensions and Clearances:

Height	6″ 152mm
Width	2 ¾″ 70mm
Length	24″–10′ 610mm–3048mm

A	1.27″	32mm
B	2.00″	51mm
C	1.63″	41mm
D	1.37″	35mm
E	2.75″	70mm
H	2.71″	69mm
W	1.25″	32mm
X	1.00″	25.4mm

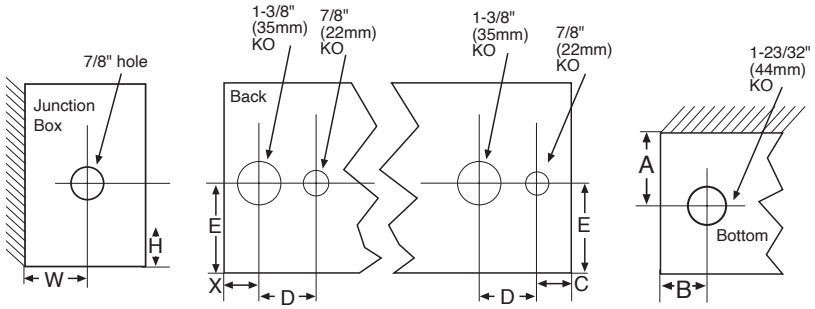

Pedestal placement and KOs shown are for standard units. Custom enclosures and/or heat decks will have pedestal placement and KOs in various locations. Consult factory.

Optional Built-In Controls:

Suffix*	OPTIONAL BUILT-IN CONTROLS	USE CASE(S)	RATINGS & DESCRIPTIONS
T	Single-Pole Thermostat	Ideal for 120v and 277v heaters	Rated 25 amps @ 120–240 VAC and 22 amps @ 277 VAC. Pilot duty rating of 125 VA (all voltages) 60–120°F temperature range adjustable through outlet grille-tamper-resistant. (See Note B)
2T	Double-Pole Thermostat	Ideal for 208v and 240v heaters	Rated 25 amps @ 120–240 VAC and 22 amps @ 277 VAC. Pilot duty rating of 125 VA (all voltages). 60–120°F temperature range adjustable through outlet grille-tamper-resistant. (See Note B for amperage restrictions)
DS	Power On/Off Switch	Ideal for servicing	Double-pole, rated 20 amp @ 120–277 VAC. (See Note A.) For heaters over 20 amps specify two
TR**	Transformer Relay	Ideal for remote, low voltage thermostats	Single-pole, low voltage relay with built-in transformer (24 VAC control), rated 22 amps @ 120–240 VAC and 22 amps @ 277 VAC. (See Note E and F) 17 amps @ 347V. Not available for three-phase heaters
PR	Power Relay	Ideal for multiple heater connections or BMS / EMS connections	Single-pole magnetic relay, rated 25 amps @ 120–600 VAC. (See Note E). Specify control voltage
PDT	Single-Pole Thermostat	For sequencing low voltage connections with a transformer relay	Same as -T except Pilot Duty. (See Note C)
R**	Receptacle	For additional electrical connections.	For built-in or as installed in a control section

* Addition To Basic Catalog No.

** Will add 4 in. to length of heater

Notes: (A) For single-phase loads over 20A, specify (2) power on/off switches. (B) This control option is not available on single-phase heaters over 25 amps (22 amps on 277 VAC). In combination with the power on/off switch option use the 2T thermostat option on heaters over 20 amps. (C) Requires PR or TR. (D) Up to 30 power relays in different heaters can be controlled by each stage of a two-stage pilot duty thermostat. (E) Two relays are required on single-phase heaters over 20 amps with a disconnect switch, over 25 amps without a disconnect switch. (F) For DBSL Series the TR (tranformer relay) R (Duplex Receptacle) will be installed in separate 4 in. long internal control boxes.

Approvals: _____ _____ _____

DBSL SERIES

How to Order

Example:

DBSL	10	25	F	20	S	MM	3	-	R	T	D	0	X	0	XXXXX

Catalog Prefix: **DBSL** = Qmark

Nominal Total Heater Length: **01** = 2′ (24″), **02** = 2.3′ (28″), **03** = 3′ (36″), **04** = 4′ (48″), **05** = 5′ (60″), **06** = 6′ (72″), **07** = 7′ (84″), **08** = 8′ (96″), **09** = 9′ (108″), **10** = 10′ (120″)

Watts/ft: **10**, **12**, **15**, **18**, **25**

Inlet: **F** = Front Inlet/Dual Inlet, **B** = Bottom Inlet

Voltage (Single Phase Only): **12** = 120V, **20** = 208V, **22** = 220V, **24** = 240V, **27** = 277V, **34** = 347V, **60** = 600V

Layout: **S** = Standard layout units—Heat Deck and control locations determined by the factory, **C** = Custom layout units—Heat Deck locations determined by Rep. using custom layout form. Control Locations must be accounted for. See notes

Heater Finish/Color (Front/Back): **M** = Mill, **C** = Clear Anodized, **Z** = Bronze Anodized, **K** = Black Anodized, **G** = Charcoal Grey, **B** = Black, **A** = Aluminum, **S** = Bronze, **N** = Beige, **W** = White, **U** = Custom*

Options: **0** = None, **1** = Pedestals, **2** = End caps**, **3** = Both above

Incoming Power Hand***: **R** = Right hand, **L** = Left hand

Thermostat: **0** = None, **T** = Single Pole Thermostat, **S** = Double Pole Thermostat, **P** = Pilot Duty Thermostat (requires PR or TR)****

Disconnect Switch: **0** = None, **D** = (1) two pole Disconnect Switch

Power Relay (requires external voltage): **0** = None, **L** = Line voltage coil (same as heater voltage), **1** = 120VAC holding coil, **2** = 24VAC holding coil

Transformer Relay (provides 24VAC power for external wall stat): **0** = None, **X** = Transformer Relay

Duplex Receptacle: **0** = None, **R** = Receptacle

5 digit serial #

*Custom finishes require additional approvals prior to acceptance. Consult factory.

**End caps (2) will have same finish as Front Cover. Pedestal qty will vary based on length of heater. All options will ship in same carton as the heater ordered with.

***Control Hand / Incoming Power connection is determined by the hand of the DS/thermostat when facing the heater. Due to space constraints the DS & Thermostat must always be mounted on the opposite hand of all other controls.

****P (pilot duty thermostat) now requires a TR (transformer relay) at 24VAC low voltage.

Contact Marley Sales Representative for additional configuration details

No matter the industry or application, Marley Engineered Products has a robust portfolio of innovative, reliable, high-performance comfort heating and ventilation solutions for all your heating needs.

For more information or assistance on your next project, contact Technical Services at 800-642-4328

Scan the QR code to access additional specs and features

Approvals: _____ _____ _____