470 Beauty Spot Rd. E
Bennettsville, SC 29512

SUBMITTAL SHEET
COS-E SERIES™
RESIDENTIAL FAN-FORCED ZONAL WALL HEATER

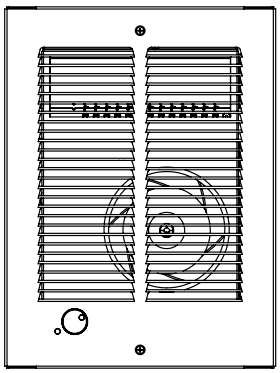

CAPACITIES
375, 500, 750, 1000, 1125, 1500, OR 2000 WATTS 120, 208 OR 240V 1Ø only Thermostat Range: 45°–135° F Air Movement: 65 CFM

See Selection Chart for all Options

JOB NAME: _____

LOCATION: _____

ARCHITECT: _____

ENGINEER: _____

CONTRACTOR: _____

SUBMITTED BY: _____ DATE: _____

TAG/ITEM	QTY.	CATALOG NUMBER	HEATER			AMPS	WEIGHT
			KW	VOLTS	Ø		

ACCESSORIES AND CONTROLS	TAG/ITEM	QTY.	CATALOG NUMBER	DESCRIPTION

SUBMITTED BY:	DATE

APPROVED BY:	DATE

COS-E SERIES

ARCHITECT'S AND ENGINEER'S SPECIFICATIONS*

The heating equipment shall include an electric automatic fan forced air heater suitable for small area heating, as manufactured by QMark®, A Marley Engineered Products® Brand, Bennettsville, SC. The heater shall be designed for wall mounting, recess or surface. Heaters shall be cETLus listed.

BACK BOX: The back box shall be designed as a recessed rough-in box in either masonry or frame installations and is also used when surface mounting frames are used in surface mounting installations. The back box shall be heavy gauge galvanized steel and shall contain knockouts through which power leads enter.

INNER FRAME ASSEMBLY: The heater assembly, which fits into the back box, shall consist of a heavy gauge steel fan panel to which all of the operational parts of the heater are mounted. The inner frame assembly shall be completely prewired.

HEATING ELEMENT: The heating element shall be of the non-glowing design consisting of an 80/20 nickel-chromium resistance wire. The element shall cover the entire air discharge area to ensure uniform heating of all discharged air. It shall be warrantied for 5 years.

MOTOR AND CONTROLS: The fan motor shall be impedance protected and permanently lubricated. The thermostat shall be double-pole type on all models. Thermal cutout shall be bi-metallic, snap-action type designed to shut off heat in the event of overheating.

SURFACE MOUNTING FRAME: The surface mounting frame shall be of heavy gauge steel designed to mount around the back box for a finished surface installation. Slot knockouts shall be provided for power supply conduit.

FRONT COVER: The louvered front cover shall be of heavy gauge steel with a powder paint finish. A plug button will be provided to replace the thermostat knob and render the unit tamper-resistant.

FINISH: All sheet metal parts, except the galvanized steel back box, shall be phosphatized, then completely painted by a powder paint process.

**QMark reserves the right to change specifications without prior notice.*

Models & Specifications:

ITEM INFORMATION		ELECTRICAL DATA						
CATALOG NO.	UPC	VOLTS (1)	VOLTS (2)	WATTS (1)	WATTS (2)	AMPS (1)	AMPS (2)	SHIP WT.
CZ1512T	685360161648	120	—	1500/750	—	12.5/6.3	—	11 lbs
CZ1012T	685360161655	120	—	1000/500	—	8.4/4.2	—	8.1 lbs
CZ1048T	685360161631	208	240	750/375	1000/500	7.2/3.6	8.4/4.2	11 lbs
CZ1548T	685360161624	208	240	1125/570	1500/750	5.4/2.7	6.3/3.2	5.6 lbs
CZ2048T	685360161617	208	240	1500/750	2000/1000	3.6/1.8	4.2/2.1	11 lbs

Optional Accessories:

CATALOG NO.	UPC	DESCRIPTION	COLOR	SHIP WT.
CZTDP	685360163321	Double-Pole Built-in Thermostat Kit (Range: 45–135°F)	White	1 lbs
CZSM	685360163352	Surface Mounting Frame	White	2 lbs
CZ2CRAKIT	685360165196	Retrofit Kit CRA to COS-E	White	2 lbs

Dimensions and Clearances:

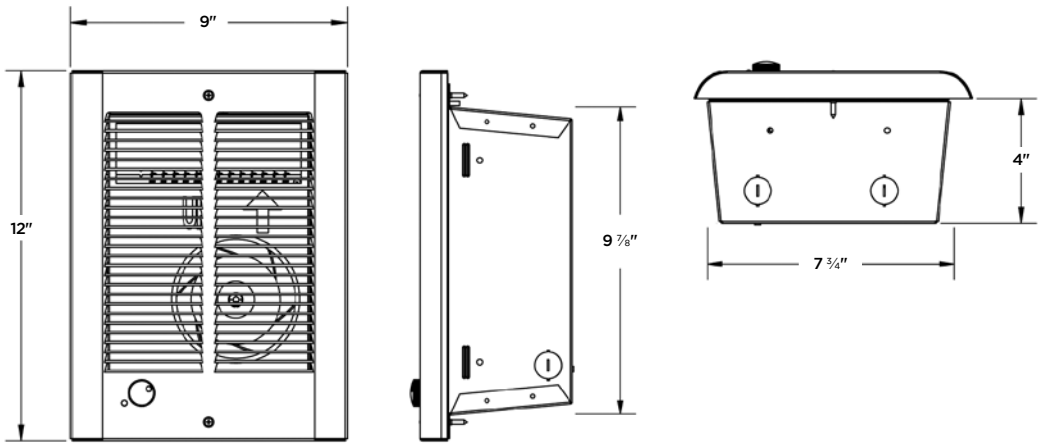

No matter the industry or application, Marley Engineered Products has a robust portfolio of innovative, reliable, high-performance comfort heating and ventilation solutions for all your heating needs.

For more information or assistance on your next project, contact Technical Services at 800-642-4328

Scan the QR code to access additional specs and features

Approvals: _____ _____ _____