470 Beauty Spot Rd. E
Bennettsville, SC 29512

# SUBMITTAL SHEET
# HT RESIDENTIAL
# SMARTSERIES®
# PROGRAMMABLE WALL HEATER

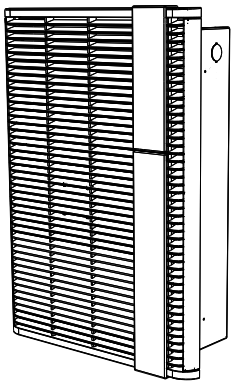

| CAPACITIES |
|---|
| 200–2000W<br>120V and 240V @ 1Ø<br>Thermostat Range: 40°–99° F<br>Air Movement: 45 CFM |

See Selection Chart for all Options

JOB NAME: _____

LOCATION: _____

ARCHITECT: _____

ENGINEER: _____

CONTRACTOR: _____

SUBMITTED BY: _____ DATE: _____

| TAG/ITEM | QTY. | CATALOG NUMBER | HEATER | | | AMPS |
|---|---|---|---|---|---|---|
| | | | KW | VOLTS | Ø | |
| | | | | | | |
| | | | | | | |
| | | | | | | |
| | | | | | | |
| | | | | | | |
| | | | | | | |
| | | | | | | |
| | | | | | | |
| | | | | | | |

| ACCESSORIES AND CONTROLS | TAG/ITEM | QTY. | CATALOG NUMBER | DESCRIPTION |
|---|---|---|---|---|
| | | | | |
| | | | | |
| | | | | |
| | | | | |

| SUBMITTED BY: | DATE |
|---|---|
| | |
| | |
| | |
| | |

| APPROVED BY: | DATE |
|---|---|
| | |
| | |
| | |
| | |

HT RESIDENTIAL SMARTSERIES – **PROGRAMMABLE WALL HEATER**

HT RESIDENTIAL SMARTSERIES

# ARCHITECT'S AND ENGINEER'S SPECIFICATIONS*

The electric fan-forced architectural wall heater shall be as manufactured by QMark,® A Marley Engineered Products® Brand, Bennettsville, SC. Heaters shall be listed by ETL and comply with UL 2021 standards for electric heating equipment. All capacities, voltages, sizes, and options shall be specified on the heater schedule. Units shall be designed for recessed or surface wall mounting.

**HEATER ASSEMBLY**: The heater assembly which fits into the back box shall consist of an 18 gauge, powder coated steel fan panel which are mounted all of the operational parts of the heater. The front grille shall be of the louvered type and shall be commercial grade construction with a contemporary architectural design; finished in a durable powder-coated finish to resist corrosion, fading, and wear. Standard grille colors shall include gray with optional white finish.

**HEATING ELEMENTS**: The heating elements shall be warranted for five years and shall be of non-glowing design consisting of 80-20 Ni/Cr resistance wire enclosed in a steel sheath to which steel plate fins are brazed. The heating element shall cover the entire air discharge area to ensure uniform heating of all discharge air.

**THERMAL LIMIT**: The heater shall be equipped with a manual-reset safety limit control that will automatically shut off heater in event of overheating due to any cause. The safety cutouts shall directly interrupt power to the elements in the event of overheating to ensure safe operation under abnormal conditions.

**FAN AND MOTOR ASSEMBLY**: The motor and fan assembly shall be direct drive and mounted on rigid heavy gauge brackets for quiet operation. The fan shall be five-bladed aluminum. The fan motor shall be totally enclosed.

**FAN DELAY CONTROL**: A built-in automatic fan delay shall prevent discharge of cold air during startup and shall continue fan operation after heating elements are de-energized to dissipate residual heat.

**TEMPERATURE CONTROL**: The unit shall include an integrated SmartSeries® digital thermostat with LED touch screen interface. The control shall provide a temperature range of 40°F to 99°F and 5/2-day programmable scheduling with four periods per day. The heater will come standard with a remote for optimal control, separate from the unit. The output of heat is proportionally controlled as to how much heat is needed to satisfy the set point. Heater automatically adjusts wattage output for optimum comfort. Heater settings can be locked out for security purposes.

**INSTALLATION**: The heater shall be designed for ease of installation, allowing the back box to be mounted prior to wiring, providing full access to electrical connections within a spacious wiring compartment.

**AIRFLOW**: Airflow shall be a minimum nominally 100 CFM.

**QMark reserves the right to change specifications without prior notice.*

## *Models & Specifications:*

| ITEM INFORMATION | | ELECTRICAL DATA | | | | | |
|---|---|---|---|---|---|---|---|
| CATALOG NO. | UPC | VOLTS | PHASES | WATTS | AMPS | BTU/HR. | SHIP WT. |
| HT2024SS | 685360153513 | 240 | 1 | 2500/2000 | 1.0/8.3 | 853/6826 | 20 lbs |
| HT1502SS | 685360153506 | 120 | 1 | 2000/1500 | 1.6/12.5 | 682/5120 | 20 lbs |
| HT2024SSNW | 685360158549 | 240 | 1 | 2500/2000 | 1.0/8.3 | 853/6826 | 27 lbs |
| HT1502SSNW | 685360158525 | 120 | 1 | 2000/1500 | 1.6/12.5 | 682/5120 | 27 lbs |

Note: Standard grille color is grey. Add NW suffix for white. For more information about Smart Series technology visit smartseriesheat.com

## *Optional Accessories*

| CATALOG NO. | UPC | DESCRIPTION | DESCRIPTION | SHIP WT. |
|---|---|---|---|---|
| SMHTSSSNW | 685360156316 | White Surface Mounting Frame, 14 ⅝" W x 20 ¼" H x 3 ¾" | White | 2.6 lbs |
| SMHTSSBL | 685360156309 | Black Surface Mounting Frame, 14 ⅝" W x 20 ¼" H x 3 ¾" D | Black | 2.6 lbs |

NOTE: Mounting Limitations: Do not install heater closer than 12 in. to the floor, 12 in. to an adjacent wall, 36 in. to the ceiling. Do not install heater behind towel rack or door, upside down or sideways, in the floor, in the ceiling, or in closets.

## *Dimensions and Clearances:*

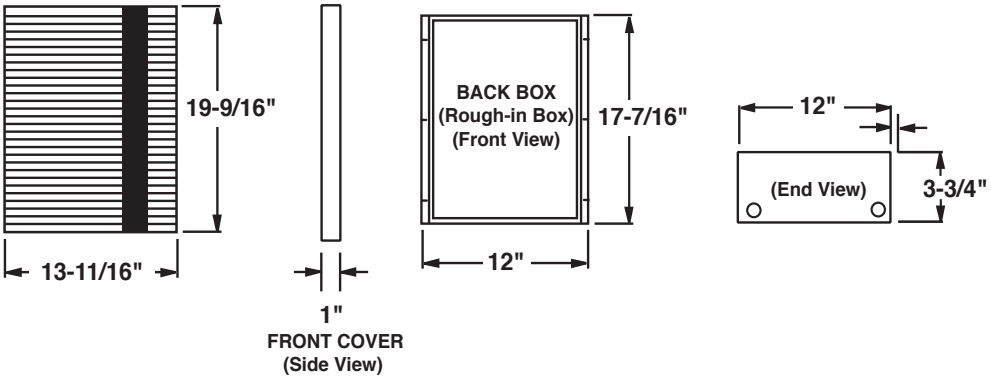


No matter the industry or application, Marley Engineered Products has a robust portfolio of innovative, reliable, high-performance comfort heating and ventilation solutions for all your heating needs.

For more information or assistance on your next project, contact Technical Services at 800-642-4328

**Scan the QR code to access additional specs and features**

Approvals: _____ _____ _____