QMARK
A Marley Engineered Products Brand

2026
PRODUCT CATALOG
DIGITAL EDITION



HEAT. ANYTIME. ANYWHERE.

When comfort is paramount and space is at a premium.



WE ARE HERE *to help!*

Marley Support Services

TECHNICAL SERVICES

Phone: 800-642-4328

Hours of Operation: Monday–Friday, 8am–4:30pm EST

Email: webmaster@marleymep.com

Marley products are available through authorized electrical, heating and cooling distributors and manufacturers' representatives.

For international sales and other inquiries, please contact us via the Headquarters contact information.

NOTICES DEPARTMENT

All insurance, notice of inspection, certified or other legal correspondence should be sent to the appropriate options below:

Email: mep.notices@marleymep.com

Fax: 843-432-3199

Marley Engineered Products: Notice Department
470 Beauty Spot Road East
Bennettsville, South Carolina 29512

HEADQUARTERS

Marley Engineered Products
470 Beauty Spot Road East
Bennettsville, South Carolina 29512

Phone: 843-479-4006

Email: webmaster@marleymep.com

THE MARLEY Difference

INNOVATION & TECHNOLOGY



Custom design capabilities across product portfolio

First to market with SmartSeries™ controls

Robust control offering featuring connected products

COMPREHENSIVE SUPPORT & SERVICE



In-house customer service, tech services & engineering teams

Manufacturing based in South Carolina, USA

Coast to coast network of sales representatives

Largest distribution network in the industry

CUSTOM SOLUTIONS TEAM



50+ years of custom heating & ventilation design experience

Full tech services & engineering team in house

Supporting you from design to installation & after-sales service

500,000+ sq. ft. manufacturing facility in Bennettsville, SC.
Our American workers build the solutions you can rely on for years to come



360° PROJECT SUPPORT

60+ representative agencies throughout North America

Over 50 years of engineering and technical expertise in heating

Products are designed, engineered & assembled in **Bennettsville, SC**

MARLEY COMFORT



Transportation



Education



Religious



Assisted Living



Healthcare



Industrial



Office / Multi-use



Residential



Multifamily



Restaurants



Retail



Parking Garage



Hazardous Environment

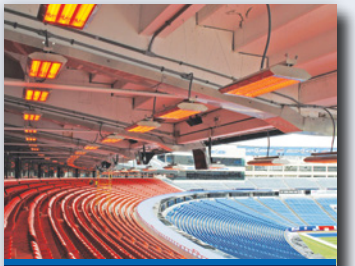

Entertainment

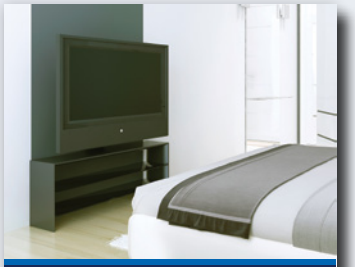

Hospitality

for every industry

Comfort Solutions FOR ALL YOUR SPACES

FOR FREEZE PROTECTION

Install anywhere heat is needed
Prevent pipes, pumps and other water or fluid-filled equipment from freezing.

Automatic, 24-hour protection
Just set the thermostat and leave it.

Corrosion Protection
Galvanized steel housing and polyester power paint for maximum durability.

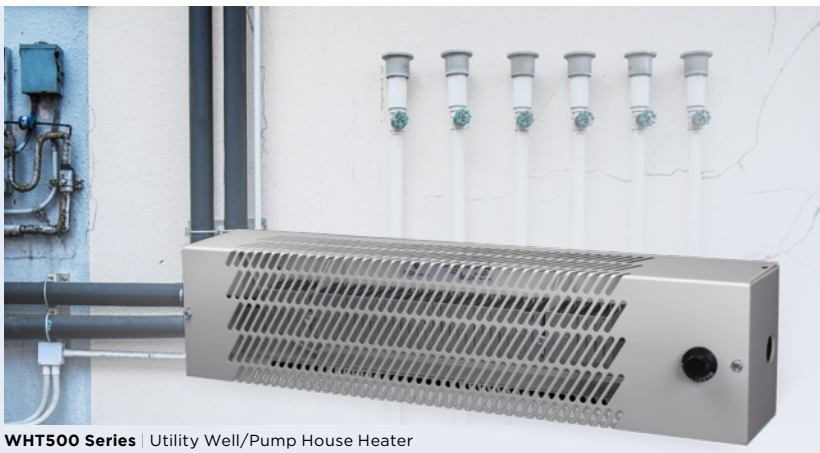

WHT500 Series | Utility Well/Pump House Heater

FOR SMALL SPACES

Stay cozy in close quarters
Compact-sized wall heater is ideal for residential or commercial installations.

Efficient and quiet
Smooth-running, multi-layer impeller so you will feel the warmth not hear it.

Fast and easy installation
CLIP-N-FIT® feature easily adjusts to half wattage for ultimate flexibility



COS-E Series | Fan-Forced Wall Heater

FOR PERSONAL SPACES

Deliver personalized warmth
Ideal for offices, workstations, conference rooms or reception areas.

Heat your target, not the air
Radiant heaters deliver focused warmth, just like the sun.

Save on energy costs
Energy-efficient; operates on less than a dollar a week*.

*Cost estimate based on energy cost of 10 cents per kWh in 5-day work week.



202SL Series | Radiant Plug-In Under Desk Heater

FOR RESIDENTIAL SPACES

Stable, gentle heat
Hydronic design with large heat reservoir maintains consistent temperatures for sustained comfort, reducing thermostat cycling.

Fewer allergens in the air
Natural convection airflow — no fans or blowers to circulate dust or allergens.

Easy to install
Low profile and UL-listed for flush wall and floor mounting.



HBB Series | Electric Hydronic Baseboard Heater

THE RIGHT SOLUTION

WHY FAN-FORCED HEAT

Quickest way to comfortably heat a space.

Delayed fan operation **eliminates cold blasts** into the space.

Variety of sizes and outputs for residential to large commercial projects.

WALL HEATERS | CEILING HEATERS | UNIT HEATERS



WHY CONVECTION HEAT

Fan-less airflow **minimizes circulation of dust and allergens**.

No moving parts for **quiet**, **easy-to-maintain comfort**.

Versatile controls for optimal **localized heating**, flexibility and **energy savings**.

ARCHITECTURAL CONVECTOR | BASEBOARD HEATERS
ARCHITECTURAL TRENCH HEATERS



WHY RADIANT HEAT

Energy efficient. Works like the sun—heats people and objects rather than the air.

Very **low maintenance** with no filters, ignitors or moving parts.

Clean and safe with no fumes, odors or combustion properties.

CEILING PANELS | INFRARED HEATERS | PORTABLE HEATERS



for unique places

MORE THAN HEAT

Need Air Circulation?

EXPLORE OPTIONS IN VENTILATION

Increase energy efficiency up to 30%* by recirculating heat energy and reducing main HVAC system load.

With destratification effect, occupants **stay comfortable longer**.

Reverse fan direction in **summer months** for cooler air.



*Based on an ASHRAE "Saving Heating Costs in Warehouses" study

Need to Heat a Flexible Floorplan?

EXPLORE OPTIONS IN PORTABLE HEATERS

Sleek, **compact design** for effortless placement anywhere.

Ready out of the box: All cords and mounting included for easy installation.

Built in controls and **safety limits** for ultimate peace of mind.



Need to Heat Hard-to-Reach Spaces?

EXPLORE OPTIONS IN SPECIALTY HEATERS

Designed for **hard-to-reach** or **remote applications**.

Specially engineered for both **occupant comfort** and/or facility **freeze protection**.

Rugged, durable construction ideal for **long-lasting heat**.

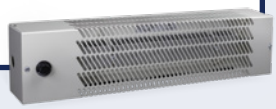

Need to Heat a Dangerous Environment?

EXPLORE OPTIONS IN HAZARDOUS HEATERS

Designed and constructed for the **most demanding environments**.

High quality, robust materials **built to last**.

Peace of mind with **safe and reliable** heat for any application.



No matter the industry or application, Marley Engineered Products has a robust portfolio of innovative, reliable, high-performance comfort heating and ventilation solutions for all your heating needs.

When it comes to comfort heating, contractors, architects, engineers and HVAC professionals trust Marley, the industry leader, for its residential, commercial and institutional heating solutions.

for safe comfort

Specialized comfort in all the right places
even in hard-to-heat spaces


11 WALL HEATERS


35 CEILING HEATERS


45 UNIT HEATERS


65 BASEBOARD


75 RADIANT HEATERS


95 PORTABLE & SPECIALTY HEATERS


111 CEILING FANS


115 THERMOSTATS & CONTROLS

Custom Capability Products Including


137 CONVECTORS


162 HAZARDOUS ENVIRONMENT PRODUCTS

A product for hard-to-heat spaces
provides comfort in many essential places

WALL HEATERS
12 AWH Series
14 CWH3000 Series
16 LFK SERIES
18 EFQ Series
20 CWH1000 Series
22 GFR Series
24 SED Series
26 COS-E SERIES™
28 SSAR Architectural SmartSeries®
30 SSHO Commercial SmartSeries®
32 HT Residential SmartSeries®

CEILING HEATERS
36 CDF Series
40 EFF Series
42 QCH Series

UNIT HEATERS
46 MUH Series
49 MUH-PRO Series
52 IUH Series
54 MWUH Series
56 MUH35 Series
57 GH48R Series
59 CUS900 Series
62 MSPH Series
64 CHPR25 Series

BASEBOARD
66 HBB Series
68 2500 Series
72 QMKC Series

RADIANT HEATERS
76 CP Series
78 RCC Series
81 FRP/FRS Series
82 STS & STT Thermazone® Series
86 THZ Control Panels
90 HRK Series
92 BRM Series

PORTABLE & SPECIALTY HEATERS
96 202SL Series
97 WHT500 Series
98 MMHD Series
99 MCM Series
100 QPH4A Series
101 BRH Series
102 FHP Series
103 FBE Series
104 QTS Series
105 FDI Series
106 MEDH Series
108 MSDH Series

CEILING FANS
112 IHD Series (Industrial High-Efficiency)
113 CHD Series (Commercial High-Efficiency)

THERMOSTATS & CONTROLS
116 SmartSeries® Plus Digital Touchscreen Control
119 Electronic Digital Line Voltage
119 Electronic Digital Low Voltage
120 Line/Low Voltage
121 Specialty Controls

Custom capability products

CEILING HEATERS
124 CDF Series

UNIT HEATERS
126 MUH Series
129 MUH-PRO Series
133 CU900 Series
135 Open Coil Electric Duct Heater

CONVECTORS
139 THX™ Series
141 DBA & SHA Series
145 DBSL Series
147 SLQDB Series
149 CPH & DPH Series
151 DSH Series
154 CSH Series
157 KCJ Series
159 ST Series

HAZARDOUS ENVIRONMENT PRODUCTS
163 QWD Series Washdown Unit Heater
167 GUX Series Explosion-Proof Unit Heater
172 QX Series Explosion-Proof Convector

RADIANT HEATERS
181 CP Series
184 FRP/FRS Series
187 THZ Control Panels

Click on a product to jump to the specific page.

QMARK® A Marley Engineered Products Brand

rev: Aug 2026

Catalog Guide

SKU Legend:

Popular Products
These products are our most commonly stocked items across channels to serve most applications in market. Usually available from inventory with standard lead times.

Extended Offering
Additional application coverage with features that may be more specific to your needs. Available with longer lead times compared to our standard stocking items.

Made to Order
These items are Made to Order configurations that are manufactured specific to your customization requirements and have longer lead times. Please contact your Marley Sales Representative for further details.

Certification Descriptions

These products are U.L. listed by Underwriters Laboratories, ensuring that the products have passed Underwriters Laboratories rigorous testing procedures to specific safety standards for electrical products and have assigned the appropriate listing number required for safety standards and electrical codes.

The CSA mark from the Canadian Safety Association is recognized and accepted throughout Canada and the US at federal, state, provincial, and municipal levels. It means that the product is certified to the applicable Canadian and US safety standards, respectively in Canadian and US markets.

A product bearing the c ETL us Listed mark signifies that it was tested and meets the minimum requirements of prescribed product safety standards for US and Canada. Moreover, the mark indicates that the manufacturer's production site conforms to a range of compliance measures and is subject to periodic follow-up inspections to verify continued conformance.

Standard Colors*

White | Beige | Bronze | Black | Aluminum

*Options vary by product

- Marley Engineered Products reserves the right to change or cancel this policy at any time, at its sole discretion without notice.
- For applications that require a primer coat, a Beige powder coat will be provided as standard color. Consult factory for more information.
- All colors are approximate (as nearly correct as can be produced by modern printing).
- Additional custom colors are available to order. Please contact your local QMark/Berko sales representative for additional details.
- There is a price adder for custom colors.
- To minimize the possibility of error when ordering material painted a custom color, a color chip of the custom color must be included with the order. The chip must be a minimum 3 x 5 in. and be of the same material as the enclosure of the ordered heater (ie. steel or aluminum).

Comfort when you need it, where you need it

Fan-forced wall heaters deliver efficiency and perform powerfully across both residential and commercial applications.

	EVERY-DAY VALUE	PROFESSIONAL VALUE	AESTHETIC & COMFORT VALUE
	Commercial-grade construction	*Reliable, low cost solution*	*Superior aesthetic appeal*
	Wattage & voltage options	*Limited output and control*	*Optimized control solutions*
	Expanded control offering	*Integrated thermostat to set and forget*	*Energy-efficient LCD screens**
Small Wall Heaters	 COS-E	 GFR	 CWH1000
Large Wall Heaters	 CWH3000	 AWH	 SSAR

*SmartSeries™ Wall Heaters only



Electric wall heaters are great for entryways, dens, basements and bedrooms in residential applications as well as for larger areas in commercial applications such as hotels, restaurants and commercial office atriums.

AWH SERIES
Architectural Heavy-Duty Wall Heater



Heavy-duty heat doesn't require that you settle for a boring, basic look. These architectural wall heaters feature a **striking design** while providing the **powerful output** you need to heat any room or open area.

Key Features:

Connect to Control

An optional relay is available to connect this wall heater to your Building Management System, for centralized control of your environment.

Contemporary Look

The bar-stock grille design provides an architectural accent that complements designed spaces like restaurants and entranceways.

Stay in Control

This unit's built-in thermostat features tamper-resistant protection, so only authorized personnel can make adjustments to your building's temperature levels.

Delay Operation

This wall heater has a fan delay feature that waits until the unit warms up to begin blowing air into the room. The fan keeps operating until the unit cools down, so you get maximum heating performance.

Ease of Maintenance

All units include a power on/off switch for added safety during maintenance, as well as a permanently lubricated and enclosed fan motor, creating long life and low maintenance needs.

Scan the QR code to access additional specs and features.

Technical Specifications:

Temp Range: 40°–90°F
CFM: 100
Grille Gauge: 18

Ideal Spaces:

Vestibules & Entrance Ways
Lobbies
Hallways
Stairwells
Restaurants
Conference Rooms
Offices
Basements
Living/Family Room

Intertek

White Bronze

For more information visit MarleyMEP.com/Products/Wall-Heaters

rev: Aug 2026

AWH SERIES
Architectural Heavy-Duty Wall Heater

Models & Specifications:

	ITEM INFORMATION		ELECTRICAL DATA					
	CATALOG NO.	UPC	VOLTS	PHASE	WATTS	AMPS	BTU/HR.	SHIP WT.
◆	AWH3150F	685360161860	120	1	1500	12.5	5,118	25 lbs
◆	AWH4307F	685360161945	277	1	3000/1500	10.8/5.4	10,236/5,118	25 lbs
◆	AWH4404F*	685360161983	240	1	4000/2000	16.7/8.3	13,649/6,824	25 lbs
			208	1	3000/1500	14.4/7.2	10,236/5,118	25 lbs
◆	AWH4407F*	685360162065	277	1	4000/2000	14.4/7.2	13,649/6,824	25 lbs
			240	1	3000/1500	12.5/6.3	10,236/5,118	25 lbs
◆	AWH4408F	685360162102	208	1	4000/2000	19.2/9.6	13,649/6,824	25 lbs
◆	AWH4504F*	685360162188	240	1	4800	20	16,378	25 lbs
			208	1	3600	17.3	12,284	25 lbs
◆	AWH4507F*	685360162263	277	1	4800	17.3	16,378	25 lbs
			240	1	3600	15	12,284	25 lbs
◆	AWH4508F	685360162300	208	1	4800	23.1	16,378	25 lbs
●	AWH3180F	685360161884	120	1	1800	15	6,142	25 lbs
●	AWH44043F	685360162027	240	3	4000	9.6	13,649	25 lbs
●	AWH44083F	685360162140	208	3	4000	11.1	13,649	25 lbs
●	AWH45043F	685360162348	240	3	4800	11.6	16,378	25 lbs
●	AWH45083F	685360162225	208	3	4800	13.3	16,378	25 lbs
●	AWH4303F	685360164021	347	1	3000	8.6	10,236	25 lbs
●	AWH4503F	685360164106	347	1	4800	13.8	16,378	25 lbs
●	AWH4306F	685360164069	600	1	3000	5	10,236	25 lbs
●	AWH4506F	685360164144	600	1	4800	8	16,378	25 lbs

SKU Legend: ◆ **= Popular Products** ● **= Extended Offering** (Contact your local Marley Sales Representative for typically associated lead times)

NOTE: *Factory-wired for higher wattage, field-convertible to half wattage. Units not available to be wired with remote thermostats. Standard finish is Bronze; For White, add NW suffix to catalog number.

Optional Accessories:

CATALOG NO.	UPC	DESCRIPTION	COLOR	SHIP WT.*
AWHPE*	685360007212	Pneumatic/Electric switch. Factory set at 10 psig to "make" on pressure drop. May be field wired to "break" on pressure drop. Pressure set point adjustable to 30 psig. (field-installed)	—	2 lbs
AWHR2 (24V)*	685360007236	Time delay relay 40–60 seconds to close when energized. Use 120V or 24V power supply from remote source (field-installed)	—	2 lbs
AWHR12 (120V)*	685360007229			
AWHS1	685360007267	1 in. deep surface mounting frame for semi-recessed installation	Bronze	2 lbs
AWHS2	685360007281	2 in. deep surface mounting frame for semi-recessed installation	Bronze	2 lbs
AWHSM	685360007243	Surface mounting frame for surface installations. Painted to match heater decor, 3 13⁄16 in. deep	Bronze	5 lbs
SMFL	685360174433	Surface Mounting Frame	White	5 lbs
SMFL1	685360174440	1 in. Semi-Recessed Frame	White	2 lbs
SMFL2	685360174457	2 in. Semi-Recessed Frame	White	2 lbs
LFKSFCNW	685360160795	14-gauge security front cover	White	6 lbs

Note: *Will accommodate pneumatic/electric or low-voltage controls commonly used with computerized energy management systems
Mounting Limitations: For wall mounting, do not install back box closer than 8 in. from floor or adjacent wall. Do not install heater behind towel rack, behind door, in floor, in closet, in ceiling or where air flow may be obstructed. All controls are concealed behind the front cover making them essentially tamper proof.

Dimensions and Clearances:

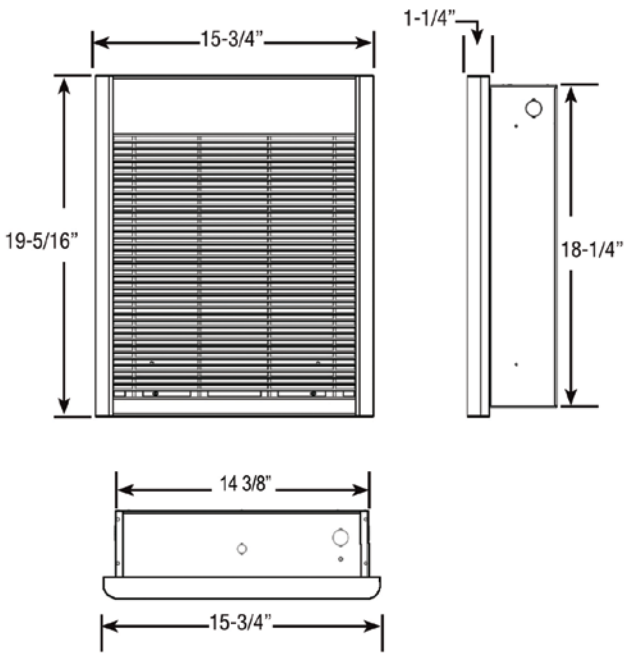

QMARK A Marley Engineered Products Brand
rev: Aug 2026

CWH3000 SERIES
Commercial Fan-Forced Large Wall Heater



With a durable commercial-grade steel grille, this heater delivers **optimized airflow** to homes, basements, offices, conference rooms, lobbies, hallways and vestibules, for wall-mounted, fan forced comfort **wherever you need it**.

Key Features:

Cool Running

Set this commercial wall heater to fan only mode for added air circulation or to keep things cool during the warmer months.

Delay Operation

This wall heater has a fan delay feature that waits until the unit warms up to begin blowing air into the room. The fan keeps operating until the unit cools down, so you get maximum heating performance.

Set Your Temp

This commercial wall heater features an integrated double-pole thermostat for easy temperature adjustment whenever you need to make a change.

Perpetual Protection

This wall heater features a permanently lubricated fan motor, so it will be ready for long-term operation with little required maintenance.

Technical Specifications:

Temp Range: 40°–90°F
CFM: 100
Grille Gauge: 20

Ideal Spaces:

Mechanical Spaces
Vestibules & Entrance Ways
Lobbies
Hallways & Stairwells
Restaurants
Conference Rooms
Medical Offices
Basements
Living/Family Room

Intertek

White

Scan the QR code to access additional specs and features.

For more information visit MarleyMEP.com/Products/Wall-Heaters

rev: Aug 2026

CWH3000 SERIES
Commercial Fan-Forced Large Wall Heater

Models & Specifications:

	ITEM INFORMATION		ELECTRICAL DATA					
	CATALOG NO.	UPC	VOLTS	PHASE	WATTS	AMPS	BTU/HR.	SHIP WT.
◆	CWH3150F	685360162386	120	1	1500	12.5	5,118	25 lbs
◆	CWH3404F*	685360162461	240	1	4000/2000	16.7/8.3	13,649/6,824	25 lbs
			208	1	3000/1500	14.5/7.2	10,236/5,118	25 lbs
◆	CWH3407F*	685360162485	277	1	4000/2000	14.5/7.2	13,649/6,824	25 lbs
			240	1	3000/1500	12.5/6.3	10,236/5,118	25 lbs
◆	CWH3408F*	685360162508	208	1	4000/2000	19.2/9.6	13,649/6,824	25 lbs
◆	CWH3504F	685360162560	240	1	4800	20	16,378	25 lbs
			208	1	3600	17.3	12,284	25 lbs
◆	CWH3507F	685360162584	277	1	4800	17.3	16,378	25 lbs
			240	1	3600	15	12,284	25 lbs
◆	CWH35083F	685360162607	208	3	4800	13.4	16,378	25 lbs
◆	CWH3508F	685360162621	208	1	4800	23.1	16,378	25 lbs
●	CWH3180F	685360162409	120	1	1800	15	6,142	25 lbs
●	CWH3307F*	685360162423	277	1	3000/1500	10.8/5.4	10,236/5,118	25 lbs
●	CWH34043F	685360162447	240	3	4000	9.7	13,649	25 lbs
●	CWH34083F	685360162508	208	3	4000	11.1	13,649	25 lbs
●	CWH35043F	685360162546	240	3	4800	11.6	16,378	25 lbs
●	CWH3153F	685360164229	347	1	1500	4.3	5,118	25 lbs
●	CWH3203F	685360164182	347	1	2000	5.8	6,824	25 lbs
●	CWH3303F	685360164267	347	1	3000	8.6	10,236	25 lbs
●	CWH3403F	685360164304	347	1	4000	11.5	13,649	25 lbs
●	CWH3503F	685360164342	347	1	4800	13.8	16,378	25 lbs
●	CWH3156F	685360164243	600	1	1500	2.5	5,118	25 lbs
●	CWH3206F	685360164205	600	1	2000	3.3	6,824	25 lbs
●	CWH3306F	685360164281	600	1	3000	5	10,236	25 lbs
●	CWH3406F	685360164328	600	1	4000	6.7	13,649	25 lbs
●	CWH3506F	685360164366	600	1	4800	8	16,378	25 lbs

SKU Legend: ◆ **= Popular Products** ● **= Extended Offering** (Contact your local Marley Sales Representative for typically associated lead times)

*Factory-wired for higher wattage, field-convertible to half wattage. For wall mounting - Do not install back box closer than 8 in. from floor or adjacent wall. Do not install heater behind towel rack, behind door, in floor, in closet, in ceiling or where air flow may be obstructed.

Optional Accessories:

CATALOG NO.	UPC	DESCRIPTION	COLOR	SHIP WT.
FRAFCTPF	685360027104	Tamper-Proof Front Cover	White	2 lbs
SMFL	685360174433	Surface Mounting Frame	White	5 lbs
SMFL1	685360174440	1 in. Semi-Recessed Frame	White	2 lbs
SMFL2	685360174457	2 in. Semi-Recessed Frame	White	2 lbs
LFKSFCNW	685360160795	14-gauge Security Front Cover	White	6 lbs

Dimensions and Clearances:

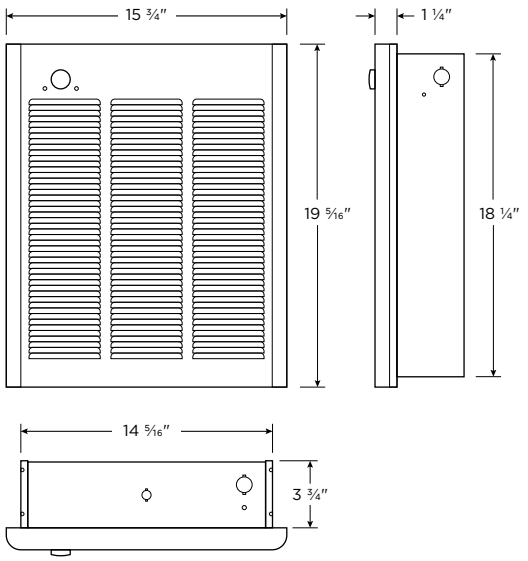

For more information visit MarleyMEP.com/Products/Wall-Heaters

rev: Aug 2026

LFK SERIES
Commercial Fan-Forced Wall Heater



For **wide open spaces** like entryways and vestibules, basements, playrooms and mechanical areas, this unit provides **fast-acting heat**.

Key Features:

High-Capacity Heat
4800 watts of power provide fast-acting, robust heat right where you need it, with no need for venting or exhaust.

Safe Operation
The unit's safety protection will shut the unit off before it overheats if the unit is accidentally blocked.

Long-Lasting Performance
Prolongs the life of the heating element by keeping the fan off until the element is at the proper temperature.

Convenient Control
A factory-installed, double-pole thermostat with a positive ON/OFF position is included for easy installation and convenient control.

Technical Specifications:

Temp Range: 40°–90°F
CFM: 100
Grille Gauge: 20

Ideal Spaces:

Mechanical Rooms
Vestibules & Entrance Ways
Lobbies & Hallways
Hotel Stairwells
Restaurants & Medical Offices
Conference Rooms
Basements
Living/Family Rooms

c ETL LISTED US
Intertek

White

Scan the QR code to access additional specs and features.

For more information visit MarleyMEP.com/Products/Wall-Heaters

QMARK A Marley Engineered Products Brand

rev: Aug 2026

LFK SERIES
Commercial Fan-Forced Wall Heater

Models & Specifications:

	ITEM INFORMATION		ELECTRICAL DATA					
	CATALOG NO.	UPC	VOLTS	PHASE	WATTS	AMPS	BTU/HR.	SHIP WT.
◆	LFK151F	685360162683	120	1	1500/750	12.5	5118/2559	22 lbs
◆	LFK204F	685360162706	240	1	2000	8.3	6824	22 lbs
			208	1	1500	7.2	5118	22 lbs
◆	LFK404F	685360161792	240	1	4000/2000	16.7	13,649/6824	22 lbs
			208	1	3000/1500	14.4	10,236/5118	22 lbs
◆	LFK484F	685360162867	240	1	4800/2400	20	16,378/8189	22 lbs
			208	1	3600/1800	17.3	12,284/6142	22 lbs
●	LFK304F	685360162744	240	1	3000/1500	12.5	10,236/5118	22 lbs
			208	1	2250/1125	7.2	7677/3839	22 lbs
●	LFK408F	685360162829	208	1	4000/2000	19.2	13,649/6824	22 lbs
●	LFK4083F	685360162805	208	3	4000	11.1	13,649	22 lbs
●	LFK487F	685360162904	277	1	4800/2400	17.3	16,378/8189	22 lbs
			240	1	3600/1800	15	12,284/6142	22 lbs
●	LFK488F	685360162942	208	1	4800	23.1	16,378	22 lbs
●	LFK4883F	685360162928	208	3	4800	13.3	16,378	22 lbs
●	LFK303F	685360162720	347	1	3000	8.6	10236	22 lbs
●	LFK403F	685360161815	347	1	4000	11.5	13,649	22 lbs
●	LFK483F	685360162805	347	1	4800	13.8	16,378	22 lbs
●	LFK306F	685360162768	600	1	3000	5	10,236	22 lbs
●	LFK406F	685360162782	600	1	4000	6.7	13,649	22 lbs
●	LFK486F	685360162881	600	1	4800	8	16,378	22 lbs

SKU Legend: ◆ **= Popular Products** ● **= Extended Offering** (Contact your local Marley Sales Representative for typically associated lead times)

Optional Accessories:

CATALOG NO.	UPC	DESCRIPTION	COLOR	SHIP WT.*
SMFL	685360174433	Surface Mounting Frame For Surface Installations. 3 13/16" Deep	White	1 lbs
SMFL1	685360174440	1 in. Deep Surface Mounting Frame For Semi-Recessed Installation	White	1 lbs
SMFL2	685360174457	2 in. Deep Surface Mounting Frame For Semi-Recessed Installation	White	1 lbs
LFKSFCNW	685360160795	14-Gauge Security Front Cover	White	6 lbs

Dimensions and Clearances:

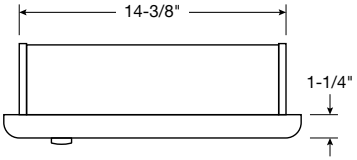

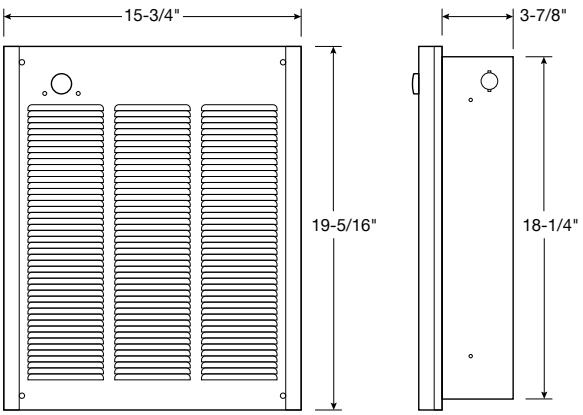

QMARK A Marley Engineered Products Brand
rev: Aug 2026

EFQ SERIES
High Output Commercial Fan-Forced Wall Heater

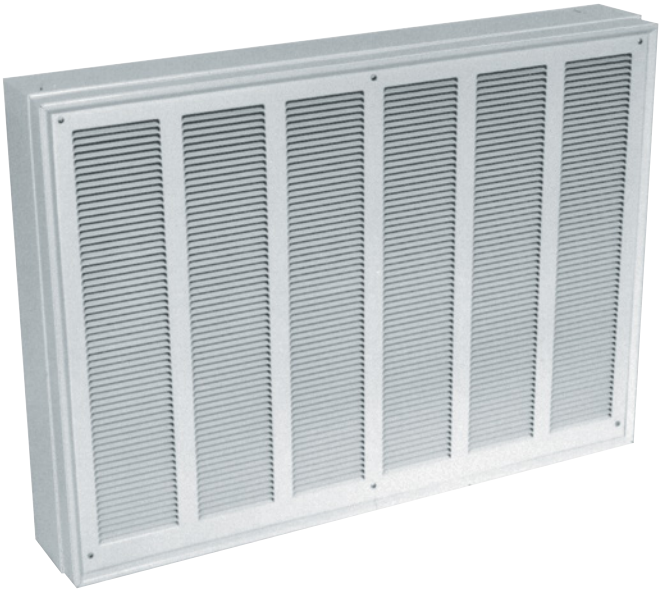

When **high output** and **extra CFM** are needed, look no further then the EFQ series wall heater. This commercial fan-forced heater is ideal for spaces that need the extra output or extra throw into the space. Whether a school, hospital, or other public space, the EFQ series is perfectly suited.

Key Features:

Cover Protection

The stamped-steel front cover of this commercial fan-forced heater provides added durability to stand up to the wear and tear of high-traffic commercial spaces.

Safer Operation

This commercial fan-forced wall heater offers built-in overheat protection, keeping building occupants safe and more comfortable.

Maintenance Made Easy

The heater comes equipped with a simple on/off switch, so it can be completely turned off for easy servicing and routine maintenance.

Technical Specifications:

Temp Range: 60°–90°F
CFM: 200
Grille Gauge: 18

Ideal Spaces:

Offices
Stores, Schools & Churches
Hospitals & Waiting Rooms
Dormitories
Airport Terminals
Reception Rooms
Lobbies, Corridors & Stairwells
Conference Rooms
Hallways

Intertek

White

Scan the QR code to access additional specs and features.

For more information visit MarleyMEP.com/Products/Wall-Heaters

rev: Aug 2026

EFQ SERIES
High Output Commercial Fan-Forced Wall Heater

Models & Specifications:

	ITEM INFORMATION		ELECTRICAL DATA						
	CATALOG NO.	UPC	VOLTS	PHASE	WATTS	AMPS	BTU/HR.	BUILT-IN THERMOSTAT	SHIP WT.
●	EFQ6008	685360021355	208	1	6000	28.8	20,525	Yes	50 lbs
●	EFQ60048	685360021324	480	1	6000	12.5	20,525	Yes	50 lbs
●	EFQ8008	685360021416	208	1	8000	38.5	27,368	Yes	50 lbs
●	EFQ8004	685360021379	240	1	8000	33.3	27,368	Yes	50 lbs
●	EFQ80048	685360021386	480	1	8000	16.7	27,368	Yes	50 lbs

SKU Legend: ◆ **= Popular Products** ● **= Extended Offering** (Contact your local Marley Sales Representative for typically associated lead times)

Optional Accessories:

CATALOG NO.	UPC	DESCRIPTION	COLOR	SHIP WT.
EFQSM	685360021270	Surface Mounting Frame	White	6 lbs
EFQS1	685360021287	1 in. Semi-Recess Frame	White	5 lbs
EFQS2	685360021294	2 in. Semi-Recess Frame	White	6 lbs
EFQR24	685360021263	24V Power Relay	—	1 lbs
EFQR120	685360021256	120V Power Relay	—	1 lbs

Dimensions and Clearances:

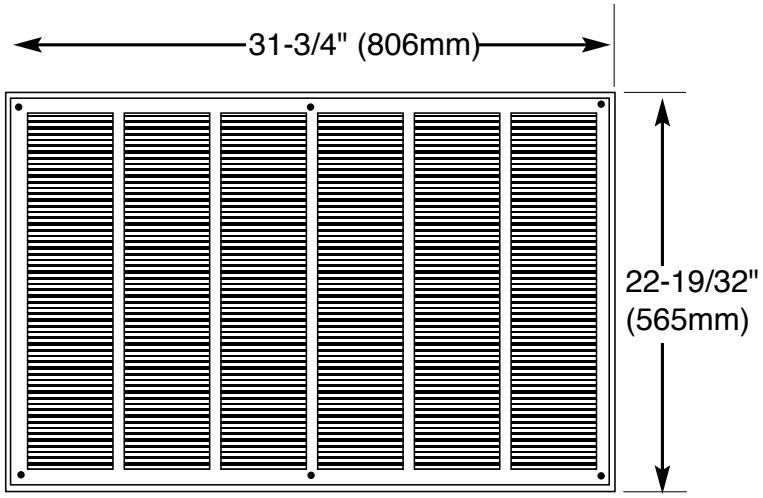

Back box dimensions 30-3/8" (771mm) wide x 21-1/4" (540mm) high x 3-3/4" (95mm) deep.

CWH1000 SERIES
Commercial Fan-Forced Small Wall Heater





Built with both durability and aesthetics in mind, the CWH1000 series heaters offer a lot, in a **small package**. Whether a waiting room, small stairwell, office, or basement, this unit offers extra warmth, robust construction, and **aesthetic appeal** to meet the needs of your building's occupants.

Key Features:

Aesthetic Appeal
This series comes with two different grille finishes that will fit the space's design, while optimizing airflow.

Maintenance Made Easy
The heater comes equipped with a simple on/off switch, so it can be completely turned off for easy servicing and routine maintenance.

Delay Operation
This wall heater has a fan delay feature that waits until the unit warms up to begin blowing air into the room. The fan keeps operating until the unit cools down, so you get maximum heating performance.

Easy Temperature Adjustment
With an integrated thermostat included, this wall heater can quickly and easily be set to maintain your ideal comfort level.

Perpetual Protection
This wall heater features a permanently lubricated fan motor, so it will be ready for long-term operation with little required maintenance.

Technical Specifications:

Temp Range: 40°–90°F
CFM: 65
Grille Gauge: 20

Ideal Spaces:

Vestibules
Entrance Ways & Lobbies
Hallways & Stairwells
Restaurants
Conference Rooms
Offices
Basements
Living/Family Room
Bedrooms

Intertek

White Bronze

Scan the QR code to access additional specs and features.

For more information visit MarleyMEP.com/Products/Wall-Heaters

QMARK A Marley Engineered Products Brand

rev: Aug 2026

CWH1000 SERIES
Commercial Fan-Forced Small Wall Heater

Models & Specifications:

	ITEM INFORMATION				ELECTRICAL DATA					
	WHITE GRILLE		ARCHITECTURAL GRILLE*		VOLTS	PHASE	WATTS	AMPS	BTU/HR.	SHIP WT.
	CATALOG NO.	UPC	CATALOG NO.	UPC						
◆	CWH1151DSF	685360163901	CWH1151DSAF	685360162980	120	1	1500/750	12.5/6.25	5120/2560	12 lbs
◆	CWH1202DSF	685360163963	CWH1202DSAF	685360163062	240	1	2000/1000	8.3/4.2	6826/3413	12 lbs
					208	1	1500/750	7.2/3.6	5120/2560	12 lbs
◆	CWH1207DSF	685360163987	CWH1207DSAF	685360163086	277	1	2000/1000	7.2/3.6	6826/3413	12 lbs
					240	1	1500/750	6.25/3.2	5120/2560	12 lbs
◆	CWH1208DSF	685360164007	CWH1208DSAF	685360163048	208	1	2000/1000	9.6/4.8	6826/3413	12 lbs
●	CWH1101DSF	685360163888	CWH1101DSAF	685360162966	120	1	1000/500	8.4/4.2	3413/1706	12 lbs
●	CWH1157DSF	685360163925	CWH1157DSAF	685360163000	277	1	1500/750	5.4/2.7	5120/2560	12 lbs
					240	1	1125/562	4.7/2.4	3840/1920	12 lbs
●	CWH1201DSF	685360163949	CWH1201DSAF	685360163024	120	1	1800	15	6143	12 lbs

SKU Legend: ◆ **= Popular Products** ● **= Extended Offering** (Contact your local Marley Sales Representative for typically associated lead times)

Optional Accessories:

CATALOG NO.	UPC	DESCRIPTION	COLOR	SHIP WT.
SMFS	685360174402	Surface Mounting Frame. Order Separately. 12 ½" H x 10 ⅜" W x 4" D	White	3 lbs
CWHSMAG	685360148526	Surface Mounting Frame. Order Separately. 12 ½" H x 10 ⅜" W x 4" D	Bronze	3 lbs
SMFS1	685360174419	1 in. Semi-Recess Mounting Frame, 12 ½" H x 10 ⅜" W x 1" D	White	3 lbs
CWHS1AG	685360148533	1 in. Recess Mounting Frame. Order Separately	Bronze	3 lbs
SMFS2	685360174426	2 in. Semi-Recess Mounting Frame, 12 ½" H x 10 ⅜" W x 2" D	White	3 lbs
CWHS2AG	685360148540	2 in. Recess Mounting Frame. Order Separately	Bronze	3 lbs
SRAFCTPF	685360164977	Tamper-Resistant Front Cover	White	1 lbs

Dimensions and Clearances:

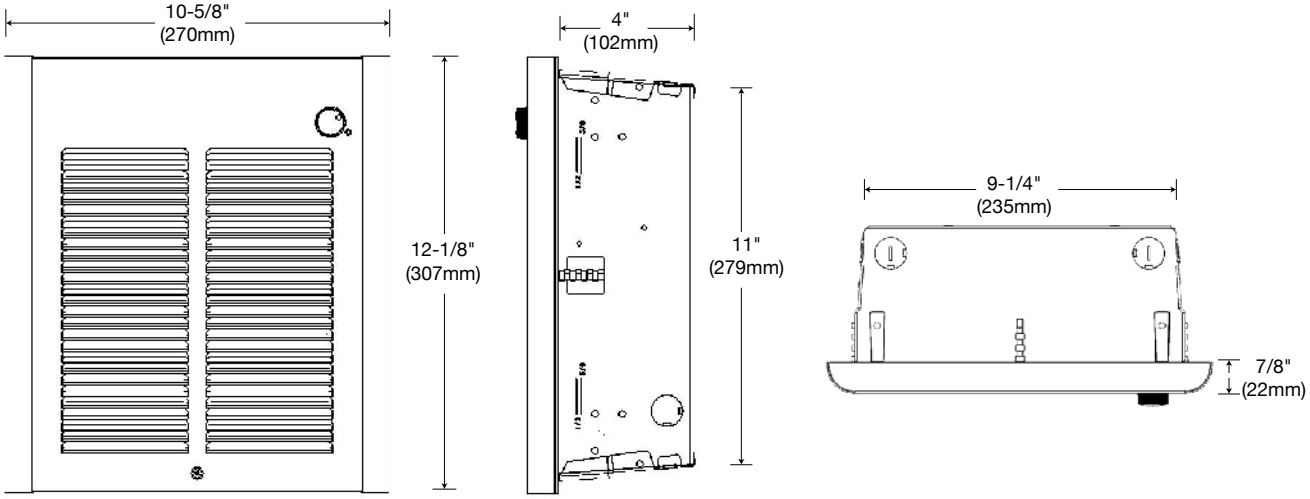

For more information visit MarleyMEP.com/Products/Wall-Heaters

rev: Aug 2026

GFR SERIES
Fan-Forced Register Style Wall Heater



Commercial-grade heating in your home. This **quiet, fast-acting** heater is built to resemble a standard home heating vent. Its simple 3-piece construction makes it **easy to install**, and the CLIP-N-FIT® jumper system allows for easy adjustment of the heater's wattage level.

Key Features:

Home Heating
The unit can be wired to a remote thermostat and to provide rapid, quiet heating for spaces like offices, playrooms, bedrooms and baths.

Quiet Operation
Enjoy reliable air circulation and heating with this unit's quiet tangential blower.

Easy Installation
The unit is easy to install, with just three pieces to assemble (back box, fan deck and front grille). The register-like front grille offers a built-in look that resembles a traditional heat vent.

Field Adaptable
CLIP-N-FIT® design allows you to lower the wattage at the point of installation to accommodate any space. Just clip out unnecessary jumpers and install.

Prevent Problems
For safe long-term operation, a thermal cutout feature with indicator light and one-time thermal fuse offer dual protection and prevent this model from overheating.

Scan the QR code to access additional specs and features.

Technical Specifications:

Temp Range: 40°–85°F
CFM: 50
Grille Gauge: 20

Ideal Spaces:

Bedrooms
Living/Family Room
Kitchens
Bathrooms
Basements
Offices
Conference Rooms
Waiting Rooms

Intertek

White

For more information visit MarleyMEP.com/Products/Wall-Heaters

rev: Aug 2026

GFR SERIES
Fan-Forced Register Style Wall Heater

Models & Specifications:

ITEM INFORMATION			ELECTRICAL DATA					
	CATALOG NO.	UPC	VOLTS	WATTS	AMPS	BTU/HR.	BUILT-IN THERMOSTAT	SHIP WT.
◆	GFR1500T2F	685360033693	120	1500/1125/750/375	12.5/9.4/6.3/3.1	5120–1280	Double Pole	11 lbs
◆	GFR2004T2F	685360033747	240*	2000/1500/1000/500	8.3/6.3/4.2/2.1	6826–1706	Double Pole	11 lbs
◆	GFR2404T2F	685360033778	240*	2400/1800/1200/600	10.0/7.5/5.0/2.5	8192–2048	Double Pole	11 lbs

SKU Legend: ◆ **= Popular Products** ● **= Extended Offering** (Contact your local Marley Sales Representative for typically associated lead times)

NOTE: For wall mounting only. Do not install back box closer than 4 in. from floor, 6 in. from adjacent walls and 36 in. from the ceiling. Do not install heater behind towel rack, behind door, in floor, in closet, in ceiling or where airflow may be obstructed. To insure proper operation, maintain 5 ft. minimum clearance to furniture or other objects placed directly in front of the heater.

*Will operate on 208V at 75% of rated wattages. For installations over 7,500 ft. above sea level we recommend using models under 1500 watts. "T2F" Model are complete heater assemblies with grille, back box, and thermostat.

Optional Accessories:

CATALOG NO.	UPC	DESCRIPTION	COLOR	SHIP WT.
GFRBB	685360033631	Single Backbox For GFR Series Heater	—	2 lbs
QFGTDP	685360059259	Double-Pole Thermostat (Field-Installed)	—	1 lbs
GFRSM	685360059266	Surface Mounting Frame	White	2 lbs

Dimensions and Clearances:

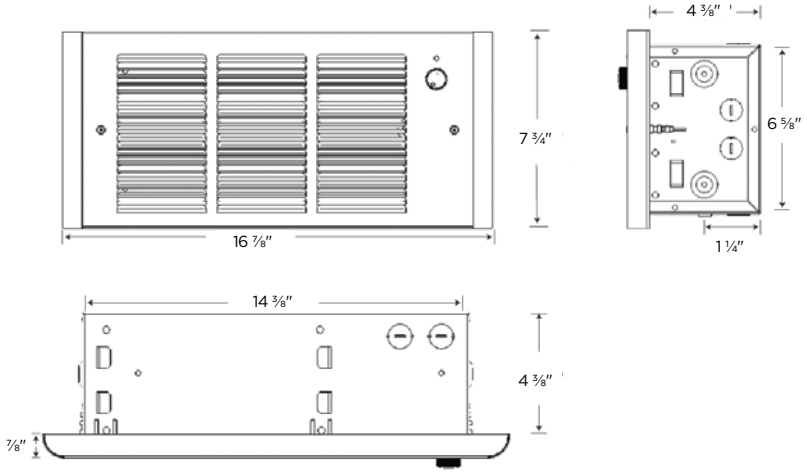

Suggested Controls



TH106A



MS26 or M601W

For more information visit MarleyMEP.com/Products/Wall-Heaters

rev: Aug 2026

SED SERIES
Fan-Forced Small Wall Heater



A unit **designed for commercial spaces** yet will fit perfectly in **residential applications**, where extra comfort and control are needed. With the right accessories, this unit can be installed on the **ceiling or surface-mounted** on the wall.

Key Features:

Shallow-mount Friendly

This fan-forced wall heater is best suited for shallow, recessed wall mounting. This makes it an ideal comfort solution for manufactured housing units and other spaces with thinner interior walls.

Localized Control

Use the built-in double pole thermostat or a remote, wall mounted thermostat for optimal room control.

Rapid Comfort

The heating element's open coil design warms up rapidly, so your room space does too. The simple design makes it easy to service and maintain the heater.

Double Protection

A built-in thermal cutout and one-time thermal fuse provide dual levels of overheat protection, for safe long-term operation of this heating unit.

Repair in No Time

This wall heater's wiring compartment is accessible to repair persons in the field, making it easy to perform service on the unit with minimal disruption to the room.

Scan the QR code to access additional specs and features.

Technical Specifications:

Temp Range: 45°–90°F
CFM: 50
Grille Gauge: 20

Ideal Spaces:

Bedrooms
Kitchens
Bathrooms
Basements
Offices
Hallways
Lobbies
Waiting Rooms

Intertek

White

Stainless Steel

For more information visit MarleyMEP.com/Products/Wall-Heaters

rev: Aug 2026

SED SERIES
Fan-Forced Small Wall Heater

Models & Specifications:

	ITEM INFORMATION		ELECTRICAL DATA						
	CATALOG NO.	UPC	VOLTS	PHASE	WATTAGE	AMPS	BTU/HR.	CEILING MOUNT	SHIP WT.
◆	SED1012C*	685360081908	120	1	1000	8.3	3410	Yes	12 lbs
◆	SED1512	685360081922	120	1	1500	12.5	5115	No	12 lbs
◆	SED2024	685360081939	240/208	1	2000/1500	8.3/7.2	6820/5115	No	12 lbs
●	SED1012W	685360148885	120	1	1000	8.3	3410	Yes	12 lbs
●	SED1024C*	685360081915	240/208	1	1000/750	4.2/3.6	3410/2557	Yes	12 lbs
●	SED1024W	685360156989	240/208	1	1000/750	4.2/3.6	3410/2557	Yes	12 lbs

SKU Legend: ◆ **= Popular Products** ● **= Extended Offering** (Contact your local Marley Sales Representative for typically associated lead times)
NOTE: Units available in built in or wall mounted thermostats. *Stainless Steel models

Optional Accessories:

CATALOG NO.	UPC	DESCRIPTION	COLOR	SHIP WT.
SEDSM	685360010431	White Surface Mounting Frame	White	3 lbs
SEDSMC	685360126173	Stainless Steel Surface Mounting Frame	Stainless Steel	3 lbs
SEDFCW	685360126166	Front Cover	White	2 lbs
SEDFCC	685360126159	Front Cover	Stainless Steel	2 lbs

Dimensions and Clearances:

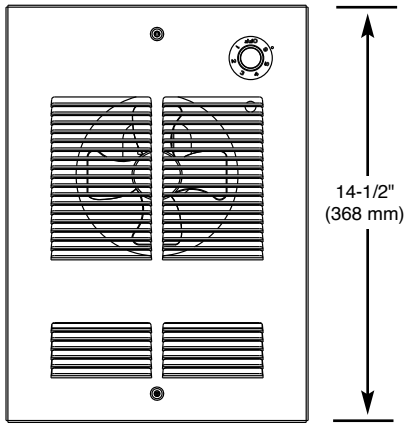

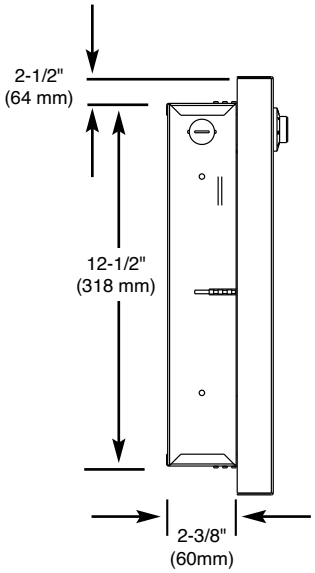

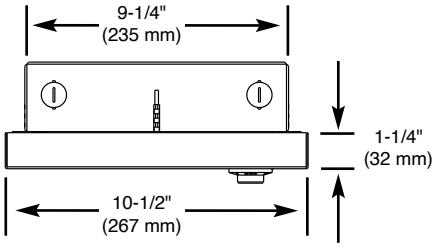

Suggested Controls



TH106A M601W

rev: Aug 2026

COS-E SERIES™
Residential Fan-Forced Zonal Wall Heater



True zonal heating in a compact design that fits in anywhere. Its **fast-response heating element** kicks in quickly, providing warmth for your bedroom, bathroom or hallway. The CLIP-N-FIT® system, thermal fuse and self-hold limit makes **installation safe and easy**.

Key Features:

Instant Heating
CLIP-N-FIT feature allows installer to select the desired wattage with ease and therefore, warm up the room rapidly. Its fast-response element delivers warmth instantly.

Efficient Operation
Get reliable zonal heating without cold spots. The unit's multi-layer impeller delivers consistent airflow in an energy-efficient design

Suitable for Any Room
Compact design fits well in bathrooms, bedrooms and hallways for comfortable living all year round.

Localized Control
Use the built-in double pole thermostat with positive OFF, or a remote, wall mounted thermostat for optimal room control.

Dual Protection
This unit features a self-hold limit to protect against overheating, with a one-time thermal fuse backup.

Universal Design
Clean aesthetics and a compact frame make this heater an unobtrusive solution for any space.

Scan the QR code to access additional specs and features.

Technical Specifications:

Temp Range: 45°–135°F
CFM: 65
Grille Gauge: 20

Ideal Spaces:

Bedrooms
Living/Family Room
Kitchens
Basements
Offices
Conference Rooms
Waiting Rooms

c ETL US LISTED Intertek

White

For more information visit MarleyMEP.com/Products/Wall-Heaters

QMARK A Marley Engineered Products Brand

rev: Aug 2026

COS-E SERIES™
Residential Fan-Forced Zonal Wall Heater

Models & Specifications:

	ITEM INFORMATION		ELECTRICAL DATA						
	CATALOG NO.	UPC	VOLTS (1)	VOLTS (2)	WATTS (1)	WATTS (2)	AMPS (1)	AMPS (2)	SHIP WT.
◆	CZ1512T	685360161648	120	—	1500/750	—	12.5/6.3	—	11 lbs
◆	CZ1012T	685360161655	120	—	1000/500	—	8.4/4.2	—	8.1 lbs
◆	CZ1048T	685360161631	208	240	750/375	1000/500	7.2/3.6	8.4/4.2	11 lbs
◆	CZ1548T	685360161624	208	240	1125/570	1500/750	5.4/2.7	6.3/3.2	5.6 lbs
◆	CZ2048T	685360161617	208	240	1500/750	2000/1000	3.6/1.8	4.2/2.1	11 lbs

SKU Legend: ◆ **= Popular Products** ● **= Extended Offering** (Contact your local Marley Sales Representative for typically associated lead times)

Optional Accessories:

CATALOG NO.	UPC	DESCRIPTION	COLOR	SHIP WT.
CZTDP	685360163321	Double-Pole Built-in Thermostat Kit (Range: 45–135°F)	White	1 lbs
CZSM	685360163352	Surface Mounting Frame	White	2 lbs
CZ2CRAKIT	685360165196	Retrofit Kit CRA to COS-E	White	2 lbs

Dimensions and Clearances:

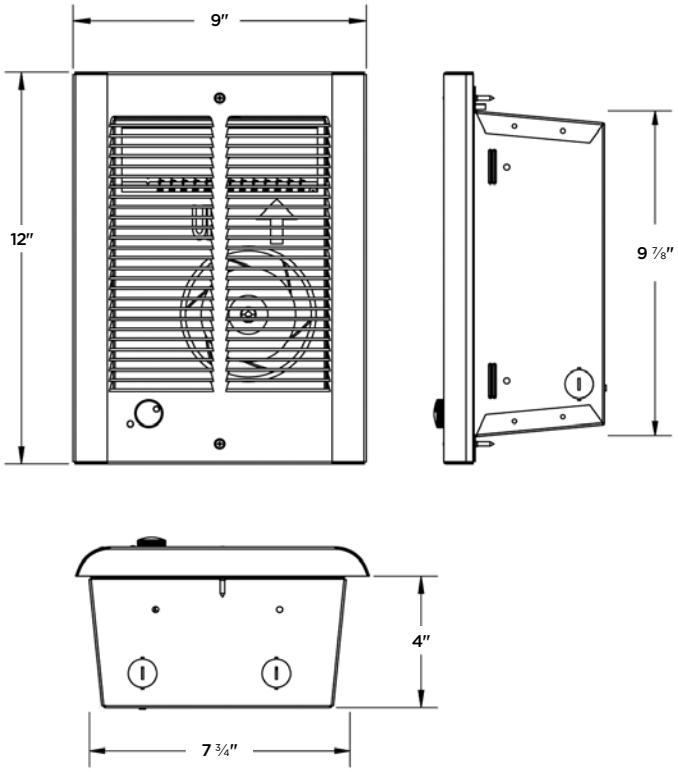

Suggested Controls



TH106A M601W

For more information visit MarleyMEP.com/Products/Wall-Heaters

QMARK A Marley Engineered Products Brand
rev: Aug 2026

SSAR ARCHITECTURAL SMARTSERIES®
Programmable Wall Heater





For superior aesthetic appeal and **energy-efficiency** that fits well in designed spaces, choose this SmartSeries® architectural wall heater. Combine the heavy duty die cast grille and 4800w output, and this unit is the **perfect accent** to any home, office, or restaurant.



Key Features:

Program Your Week

This wall heater features a hidden LCD touchscreen with 5/2 day programmable control, so you can set your heating pattern to best fit the way you live and work.

Command at Your Fingertips

With an included infrared remote control, you can activate, adjust and program this wall heater's thermostat from anywhere in the room.

Output on Demand

This wall heater features a two-speed fan, so you can fine-tune your heat output to your desired level quickly. A fan only mode and hold function provide additional flexibility, ventilation and comfort.

Connect to Control

This SmartSeries wall heater connects to your existing Building Management System for centralized control of your entire climate system.

Guaranteed Peace of Mind

A five-year warranty covers this wall heater's steel-plate finned element, for long-lasting performance you can trust for years to come.

Scan the QR code to access additional specs and features.

Technical Specifications:

Temp Range: 40°–90°F
CFM: 100

Ideal Spaces:

Living Rooms
Basements
Lobbies
Offices
Conference Rooms
Waiting Room
Vestibules & Stairwells
Restaurants

Intertek

SMART ENERGY SAVER
Saves up to 40%* energy usage

White Aluminum

For more information visit MarleyMEP.com/Products/Wall-Heaters

QMARK A Marley Engineered Products Brand

rev: Aug 2026

SSAR ARCHITECTURAL SMARTSERIES®
Programmable Wall Heater

Models & Specifications:

ITEM INFORMATION			ELECTRICAL DATA					
	CATALOG NO.	UPC	VOLTS	PHASES	WATTS	AMPS	BTU/HR.	SHIP WT.
◆	SSAR1802	685360156835	120	1	900/1800	15	6,142	25 lbs
◆	SSAR4808	685360156750	208	1	1440/4800	23.1	16,378	25 lbs
◆	SSAR4804	685360156781	240	1	1440/4800	20	16,378	25 lbs
◆	SSAR4807	685360156798	277	1	1440/4800	17.3	16,378	25 lbs

SKU Legend: ◆ **= Popular Products** ● **= Extended Offering** (Contact your local Marley Sales Representative for typically associated lead times)

NOTE: For handling 208V Max AMP loads, contact your local Marley Sales Representative. Standard grille color is White. Add AL (Aluminum) suffix to catalog number of both the heater and mounting frame (ex. SSAR1802AL). Mounting Limitations: Do not install heater closer than 12 in. to the floor, 12 in. to an adjacent wall, 36 in. to the ceiling. Do not install heater behind towel rack or door, upside down or sideways, in the floor, in the ceiling, or in closets.

Optional Accessories:

CATALOG NO.	UPC	DESCRIPTION	COLOR	SHIP WT.
HTWHSM	685360155456	Surface Mounting Frame 15 ⅜" W x 19 ³⁄₁₆" H x 3 ¾" D	White	4 lbs
HTWHS1	685360155487	1 in. Semi-Recess Mounting Frame 15 ⅜" W x 19 ³⁄₁₆" H x 1" D	White	4 lbs
HTWHS2	685360155517	2 in. Semi-Recess Mounting Frame 15 ⅜" W x 19 ³⁄₁₆" H x 2" D	White	4 lbs

Dimensions and Clearances:

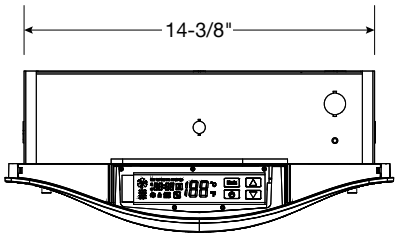

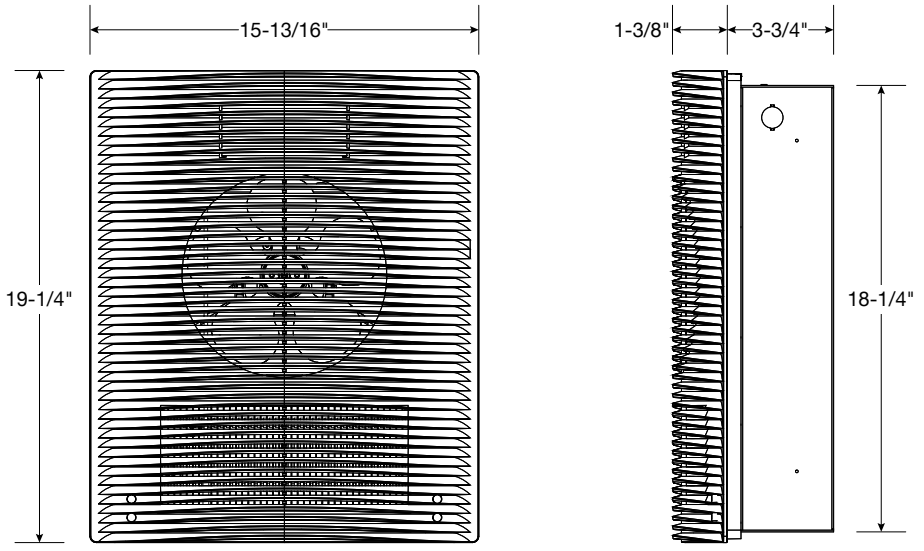

For more information visit MarleyMEP.com/Products/Wall-Heaters

QMARK A Marley Engineered Products Brand
rev: Aug 2026

SSHO COMMERCIAL SMARTSERIES®
High-Output Wall Heater



SmartSeries fan-forced wall heaters provide the **ultimate integration** with your building's climate system. The LED touchscreen-enabled programmable thermostat offers a control lockout feature so temperatures stay set at the level you control. Plus, the unit is **compatible with a Building Management System** (BMS) for easy monitoring and operation from a central location. Its augmented 4000-watt heat level makes it suitable for big rooms.

Key Features:

Heat for Big Spaces
For use in large entryways, basements, garages, dens and other 20-foot by 20-foot rooms, up to 400 square feet.

Easy Level Setting
The built-in thermostat features a 5/2 day program so you can set different temperatures for weekday and weekend use.

Heat Only When You Need It
Smart technology automatically adjusts heat output to help reduce energy costs and provide powerful, quiet climate control.

Proportional Heat Output
Delivers heat levels from 1800–4000 watts, plus a fan-only mode to provide ventilation without heat.

Fan Delay
Prolongs the life of the heating element by keeping the fan off until the element is at the proper temperature.

Technical Specifications:

Temp Range: 40°–99°F
CFM: 100
Grille Gauge: 20

Ideal Spaces:

Basements
Offices
Conference Rooms
Lobbies
Waiting Rooms
Entrance Ways
Vestibules
Restaurants
Stairwells

Intertek

White

Scan the QR code to access additional specs and features.

For more information visit MarleyMEP.com/Products/Wall-Heaters

QMARK A Marley Engineered Products Brand

rev: Aug 2026

SSHO COMMERCIAL SMARTSERIES®
High-Output Wall Heater

Models & Specifications:

ITEM INFORMATION			ELECTRICAL DATA					
	CATALOG NO.	UPC	VOLTS	PHASES	WATTS	AMPS	BTU/HR.	SHIP WT.
◆	SSHO4008	685360156705	208	1	1800/4000	8.7/19.2	13,650	26 lbs
◆	SSHO4004	685360156729	240	1	1800/4000	7.5/16.7	13,650	26 lbs
◆	SSHO4007	685360156736	277	1	1800/4000	6.5/14.4	13,650	26 lbs

SKU Legend: ◆ **= Popular Products** ● **= Extended Offering** (Contact your local Marley Sales Representative for typically associated lead times)

Optional Accessories:

CATALOG NO.	UPC	DESCRIPTION	DESCRIPTION	SHIP WT.
HTWHSM	685360155456	Surface Mounting Frame 15 ⅜" W x 19 ³⁄₁₆" H x 3 ¾" D	White	4 lbs
HTWHS1	685360155487	1 in. Semi-Recess Mounting Frame 15 ⅜" W x 19 ³⁄₁₆" H x 1" D	White	4 lbs
HTWHS2	685360155517	2 in. Semi-Recess Mounting Frame 15 ⅜" W x 19 ³⁄₁₆" H x 2" D	White	4 lbs

NOTE: See paint policy page for information on custom paint colors. Mounting Limitations: Do not install heater closer than 12 in. to the floor, 12 in. to an adjacent wall, 36 in. to the ceiling. Do not install heater behind towel rack or door, upside down or sideways, in the floor, in the ceiling, or in closets.

Dimensions and Clearances:

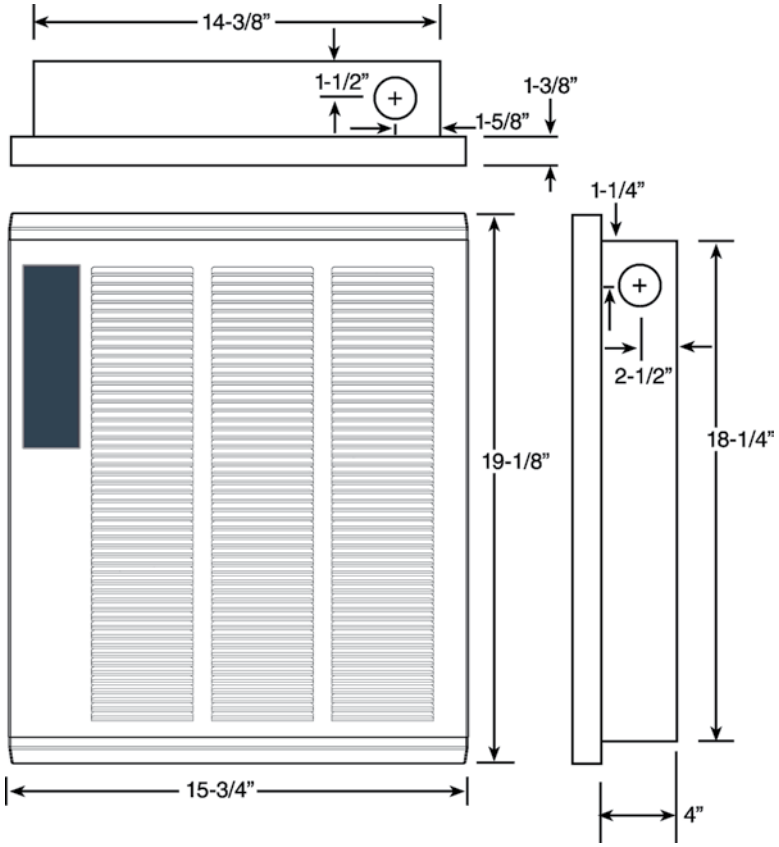

For more information visit MarleyMEP.com/Products/Wall-Heaters

QMARK A Marley Engineered Products Brand
rev: Aug 2026

HT RESIDENTIAL SMARTSERIES®
Programmable Wall Heater







This SmartSeries® fan-forced wall heater provides a convenient way to program your finished attic, basement, garage or workspace for **year-round warmth and comfort**. Its SmartSeries technology includes an easy-to-read LED touch screen and a programmable thermostat with **separate settings for weekdays and weekends**. The heater is UL/CSA listed for worry-free installation and operation in your home or business.

Key Features:

Heat Any Room
Provides reliable heat for any room or entryway, even larger and odd shaped ones. Perfect for dens, basements and finished attics, workshops, garages, offices and bathrooms.

Auto Adjust
Automatically adjusts heat output and fan speed to help reduce energy costs and provide powerful, quiet climate control.

Long Life
Prolongs the life of the heating element by keeping the fan off until the element is at the proper temperature.

Easy Level Setting
The built-in thermostat features a 5/2 Day program so you can set different temperatures for weekday and weekend use.

Complete Control
LED touch screen provides easy access to settings and features, while the included remote control allows you to set temperatures from across the room.

Technical Specifications:

Temp Range: 40°–99°F
CFM: 100

Ideal Spaces:

Kitchens
Bathrooms
Basements
Offices & Waiting Rooms
Conference Rooms
Hallways
Lobbies
Entrance Ways
Vestibules

Intertek

SMART ENERGY SAVER
Saves up to 40%* energy usage

White Gray

Scan the QR code to access additional specs and features.

For more information visit MarleyMEP.com/Products/Wall-Heaters

QMARK A Marley Engineered Products Brand

rev: Aug 2026

HT RESIDENTIAL SMARTSERIES®
Programmable Wall Heater

Models & Specifications:

	ITEM INFORMATION		ELECTRICAL DATA					
	CATALOG NO.	UPC	VOLTS	PHASES	WATTS	AMPS	BTU/HR.	SHIP WT.
◆	HT2024SS	685360153513	240	1	2500/2000	1.0/8.3	853/6826	20 lbs
◆	HT1502SS	685360153506	120	1	2000/1500	1.6/12.5	682/5120	20 lbs
●	HT2024SSNW	685360158549	240	1	2500/2000	1.0/8.3	853/6826	27 lbs
●	HT1502SSNW	685360158525	120	1	2000/1500	1.6/12.5	682/5120	27 lbs

SKU Legend: ◆ **= Popular Products** ● **= Extended Offering** (Contact your local Marley Sales Representative for typically associated lead times)
Note: Standard grille color is grey. Add NW suffix for white. For more information about Smart Series technology visit smartseriesheat.com

Optional Accessories

CATALOG NO.	UPC	DESCRIPTION	DESCRIPTION	SHIP WT.
SMHTSSSNW	685360156316	White Surface Mounting Frame, 14 ⅝" W x 20 ¼" H x 3 ¾"	White	2.6 lbs
SMHTSSBL	685360156309	Black Surface Mounting Frame, 14 ⅝" W x 20 ¼" H x 3 ¾" D	Black	2.6 lbs

NOTE: Mounting Limitations: Do not install heater closer than 12 in. to the floor, 12 in. to an adjacent wall, 36 in. to the ceiling. Do not install heater behind towel rack or door, upside down or sideways, in the floor, in the ceiling, or in closets.

Dimensions and Clearances:

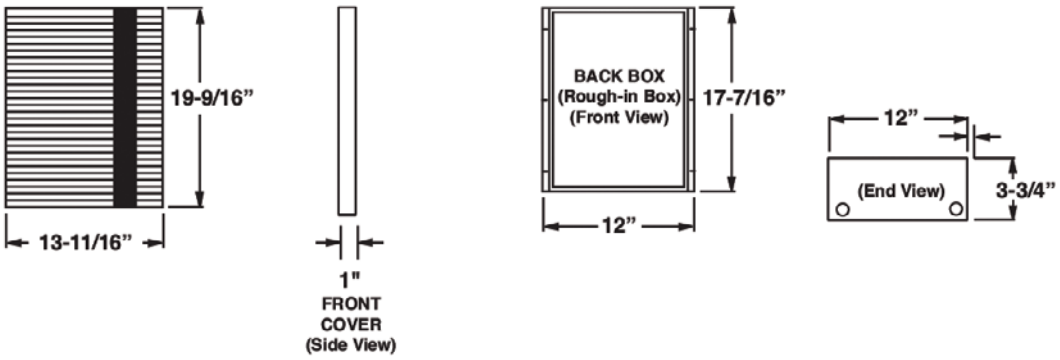

rev: Aug 2026

Limited floor space? Warm up with ceiling heat.

Ceiling mounted electric heaters add energy-saving warmth and comfort to any room.

EVERY-DAY VALUE

Great for Bathrooms and Offices

Recessed and Surface mounts available

Dual Voltage and Wattage Models



QCH

PROFESSIONAL VALUE

Great for Medium Spaces

Recessed, Surface, or T-bar mounts available

BMS Compatible



EFF

AESTHETIC & COMFORT VALUE

Great for Any Space

Recessed, Surface, or T-bar mounts available

Multiple Airflow Options

BMS Compatible



CDF

Mounted flat or recessed to the ceiling, ceiling heaters bring unobstructed comfort to your space.





CDF SERIES
Commercial Downflow Ceiling Heater





SmartSeries Plus



For commercial spaces that need **unobtrusive comfort**, install this downflow ceiling heater. Deliver **powerful warmth** to your office, conference room, lobby, waiting room or entranceway.

Now compatible with SmartSeries® Plus!

Key Features:

Two Enclosures Available

Order a surface or recessed enclosure, depending on your ceiling type and available space. Surface mounting extends only 6 inches into the room, while the recessed enclosure requires only 7 inches of internal clearance.

Adjustable Airflow

Choose a narrow pattern to focus heat on one particular area, or a wide pattern to blanket more area. Asymmetrical heating patterns focus output while providing generous coverage.

BMS Compatibility

Optional relays allow you to connect this ceiling heater to your central building management system, so you can control temperatures from one location.

Easy Installation

Included thumb pins hold the unit together, freeing both hands for installation on the ceiling surface or within an enclosure.

Technical Specifications:

Temp Range: 45°–90°F
CFM: 300
Grille Gauge: 20

Ideal Spaces:

Bathrooms
Offices
Conference Rooms
Lobbies
Waiting Rooms
Entrance Ways

White Beige

Scan the QR code to access additional specs and features.

For more information visit MarleyMEP.com/Products/Ceiling-Heaters

rev: Aug 2026

CDF SERIES
Commercial Downflow Ceiling Heater

Models & Specifications:

	ITEM INFORMATION			ELECTRICAL DATA					
	CATALOG NO.	UPC	MOUNTING	KW	BTU/HR.	AMPS	VOLTS	PHASE	SHIP WT.
◆	CDF548	685360015101	Heater Section Only	4/3/2	13.7/10.2/6.8	19.2/14.2/9.6	208	1–3	27 lbs
◆	CDF542	685360015088	Heater Section Only	4/3/2	13.7/10.2/6.8	16.7/12.5/8.3	240	1–3	27 lbs
◆	CDF547	685360015095	Heater Section Only	4/3/2	13.7/10.2/6.8	14.4/10.8/7.2	277	1	27 lbs
◆	CDF558	685360015132	Heater Section Only	5/3.8/2.5	17.1/13/8.5	24/18.3/12	208	1–3	27 lbs
◆	CDF552	685360015118	Heater Section Only	5/3.8/2.5	17.1/13/8.5	20.8/15.8/10.4	240	1–3	27 lbs
◆	CDF557	685360015125	Heater Section Only	5/3.8/2.5	17.1/13/8.5	18.1/13.7/9	277	1	27 lbs

SKU Legend: ◆ **= Popular Products;** ● **= Extended Offering** (Contact your local Marley Sales Representative for typically associated lead times)

Models & Specifications – Packaged Options:

	ITEM INFORMATION			ELECTRICAL DATA					
	CATALOG NO.	UPC	MOUNTING	KW	BTU/HR.	AMPS	VOLTS	PHASE	SHIP WT.
◆	CDF542RE	685360186030	Recessed Mount	4/3/2	13.7/10.2/6.8	16.7/12.5/8.3	240	1–3	37 lbs
◆	CDF542SE	685360186047	Surface Mount	4/3/2	13.7/10.2/6.8	16.7/12.5/8.3	240	1–3	27 lbs
◆	CDF547RE	685360152745	Recessed Mount	4/3/2	13.7/10.2/6.8	14.4/10.8/7.2	277	1	37 lbs
◆	CDF547SE	685360152752	Surface Mount	4/3/2	13.7/10.2/6.8	14.4/10.8/7.2	277	1	27 lbs
◆	CDF548RE	685360152769	Recessed Mount	4/3/2	13.7/10.2/6.8	19.2/14.2/9.6	208	1–3	37 lbs
◆	CDF548SE	685360152776	Surface Mount	4/3/2	13.7/10.2/6.8	19.2/14.2/9.6	208	1–3	27 lbs
◆	CDF552RE	685360152783	Recessed Mount	5/3.8/2.5	17.1/13/8.5	20.8/15.8/10.4	240	1–3	37 lbs
◆	CDF552SE	685360152790	Surface Mount	5/3.8/2.5	17.1/13/8.5	20.8/15.8/10.4	240	1–3	27 lbs
◆	CDF557RE	685360152806	Recessed Mount	5/3.8/2.5	17.1/13/8.5	18.1/13.7/9	277	1	37 lbs
◆	CDF557SE	685360152813	Surface Mount	5/3.8/2.5	17.1/13/8.5	18.1/13.7/9	277	1	27 lbs
◆	CDF558RE	685360152820	Recessed Mount	5/3.8/2.5	17.1/13/8.5	24/18.3/12	208	1–3	37 lbs
◆	CDF558SE	685360152837	Surface Mount	5/3.8/2.5	17.1/13/8.5	24/18.3/12	208	1–3	27 lbs

SKU Legend: ◆ **= Popular Products;** ● **= Extended Offering** (Contact your local Marley Sales Representative for typically associated lead times)
NOTE: Factory-wired for highest wattage, field-convertible to lower wattages. Factory-wired 1-PH, field convertible to 3-PH dual-phase units, maximum amp draw is listed. Amperage shown is for single phase.

Optional Accessories – Electronic / Control Options:

CATALOG NO.	UPC	DESCRIPTION	COLOR	SHIP WT.
CDFT	685360015033	Integral thermostat SPST — Range 45 to 95°F	—	1 lbs
CDFDS	685360014968	Disconnect Switch (3-Pole) 30 amps, 600 volts, 3Ø, 60 Hz	—	1 lbs
CDFTR4*	685360015057	208/240V Primary Transformer/24V sec. and 24V holding coil control relay	—	1 lbs
CDFTR7*	685360015064	277V Primary Transformer/24V sec. and 24V holding coil control relay	—	1 lbs

For factory installation of above controls, additional charges apply.
*Optional Power Relays or Integral Thermostats cannot be used when the Transformer Relay Option is chosen
For easy BMS integration, heater, relay, and SmartSeries Plus are needed

Optional Accessories – Mounting Options:

CATALOG NO.	UPC	DESCRIPTION	COLOR	SHIP WT.
CDFSE	685360015019	Surface-mounted enclosure — to be used with above heater section. 20" L x 16 ½" W x 5 ¾" D	Beige	10 lbs
CDFRE	685360014982	Recessed-mounted enclosure — to be used with above heater section. 23 ¾" L x 23 ¾" W x 7" D	Beige	18 lbs
CDFSENW	685360149615	Surface-mounted — to be used with above heater section. 20" L x 16 ½" W x 5 ¾" D	White	10 lbs
CDFRENW	685360149639	Recessed-mounted — to be used with above heater section. 23 ¾" L x 23 ¾" W x 7" D	White	18 lbs
CDFTK	685360015040	Trim Ring for mounting on permanent ceiling (cannot be factory installed)	—	1 lbs
CDFRFK	685360171548	Mounting Bracket Retrofit Kit	—	2.5 lbs

CDF SERIES
Commercial Downflow Ceiling Heater

Dimensions and Clearances:

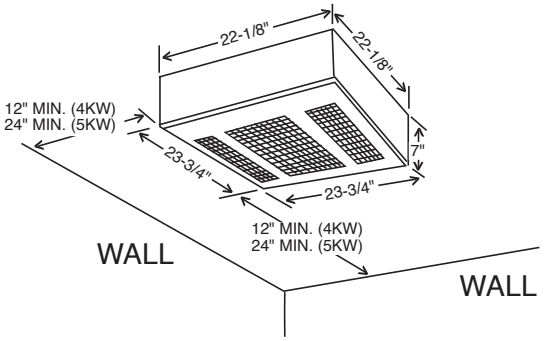

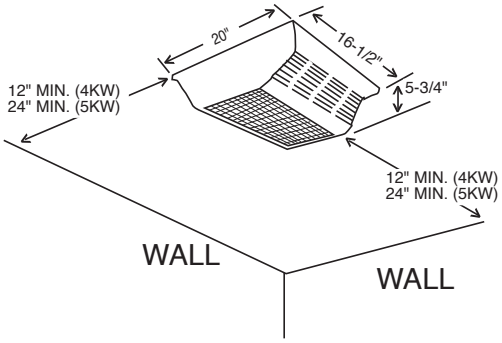

Adjustable Airflow Options:

Wide Pattern
(24x8 ft. coverage)
In standard ceiling applications (8–10 ft.), heater disperses the air to give a gentle, less pronounced pattern while circulating all the air from floor to ceiling.

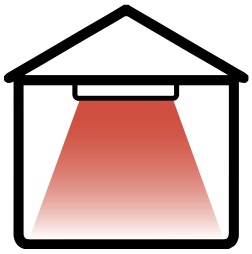

Narrow Pattern
(8x8 ft. coverage)
For high ceiling applications (11–14 ft.), fan concentrates the heated air to ensure full penetration to the floor level.

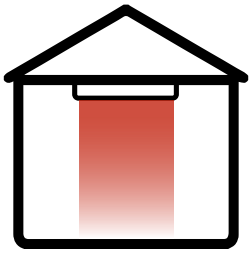

Asymmetrical Pattern
(17x10 ft. coverage)
Heated air is directed in a specific direction, allowing the heater to be located where space allows, with the heated air delivered to where it is required.

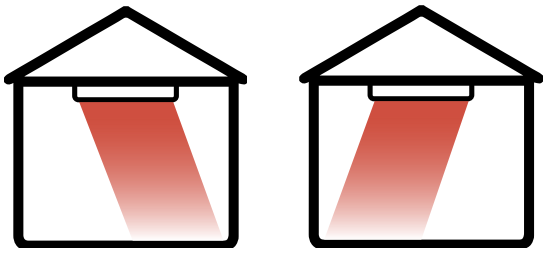

Suggested Controls



Now compatible with SmartSeries Plus when used with 24VAC control transformer!

For more information visit MarleyMEP.com/Products/Ceiling-Heaters

rev: Aug 2026

EFF SERIES
Ceiling-Mounted Fan-Forced Heater



Anywhere it makes sense to keep your heating solution **out of the way** and **out of reach**, choose these fan-forced ceiling heaters. A comfort solution for lobbies, restrooms or detention environments.

Key Features:

Flexible Installation
This heater accommodates three installation formats, so you can choose recessed mounting, T-Bar or surface application.

Ready to Connect
This ceiling heater easily accommodates low voltage and electric control schemes like those typically found in centralized BMS applications.

Fan Delay
The heater's fan waits until the desired temperature is achieved before blowing air into the room, and discharges all residual heat before shutting off.

Enhanced Control
This ceiling heater has an included on/off switch for safe, simple installation and maintenance.

Heavy-duty Design
This ceiling heater's 14-gauge steel louvered grille is fastened with tamper-resistant screws, for added security and durability.

Technical Specifications:

Temp Range: 40°–90°F
CFM: 150
Grille Gauge: 14

Ideal Spaces:

Hallways
Lobbies
Entryways
Restrooms
Detention Environments

Intertek

Beige

Scan the QR code to access additional specs and features.

For more information visit MarleyMEP.com/Products/Ceiling-Heaters

rev: Aug 2026

EFF SERIES
Ceiling-Mounted Fan-Forced Heater

Models & Specifications:

	ITEM INFORMATION		ELECTRICAL DATA					
	CATALOG NO.	UPC	VOLTS	PHASE	WATTS	AMPS	BTU/HR.	SHIP WT.
◆	EFF1500	685360148106	120	1	1500	12.5	5120	23 lbs
◆	EFF3007	68536059075	277	1	3000/1500	10.8/5.4	10239/5120	23 lbs
◆	EFF4008	68536059136	208	1	4000/2000	19.2/9.8	13652/6826	23 lbs
◆	EFF4004	68536059099	240	1	4000/2000	16.7/14.4	13652/10239	23 lbs
			208	1	3000/1500		10239/5120	
◆	EFF4007	68536059129	277	1	4000/2000	14.4/12.5	13652/10239	23 lbs
			240	1	3000/1500		10239/5120	
◆	EFF4804	68536059167	240/208	1	4800/3600	20.0/17.3	16382/12287	23 lbs
◆	EFF4807	68536059198	277/240	1	4800/3600	17.3/15.0	16382/12287	23 lbs
●	EFF48483	685360155845	480	3	4800	5.8	16382	23 lbs
●	EFF48483LV	685360155869	480	3	4800	5.8	16382	23 lbs
●	EFF3003	68536021089	347	1	3000	8.6	10239	23 lbs
●	EFF3006	68536021096	600	1	3000	5	10239	23 lbs
●	EFF4003	68536021119	347	1	4000	11.5	13652	23 lbs
●	EFF4006	68536021140	600	1	4000	6.7	13652	23 lbs
●	EFF4803	68536021188	347	1	4800	13.8	16382	23 lbs
●	EFF4806	68536021218	600	1	4800	8	16382	23 lbs

SKU Legend: ◆ **= Popular Products** ● **= Extended Offering** (Contact your local Marley Sales Representative for typically associated lead times)
NOTE: Factory-wired for highest wattage, field-convertible to lower wattages. Orders above 7500' sea level require special order

Optional Accessories:

CATALOG NO.	UPC	DESCRIPTION	COLOR	SHIP WT.
EFFSM	685360020983	Surface Mounting Sleeve	Beige	6 lbs
EFFR2 (24V)	685360020976	Time delay relay, 45–60 seconds to close when energized; Uses remote 24V or 120V power source	—	1 lbs
EFFR12 (120V)	685360020969			
EFFTBF	685360020990	T-Bar Frame Kit	—	4.5 lbs
EFFT1	685360021027	Single Pole T-Stat. (Field Installed)	—	1 lbs
EFFTR4	685360021003	208/240V Primary Transformer 24V Relay	—	1 lbs
EFFTR7	685360021010	277V Primary 24V Sec. Transformer Relay	—	1 lbs

Dimensions and Clearances:

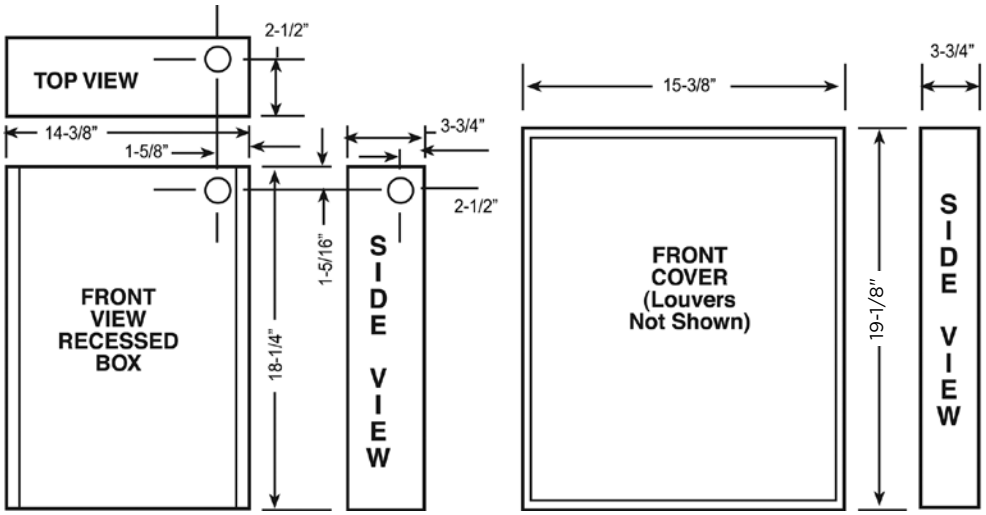

Suggested Controls



MS26 or M601W

QMARK A Marley Engineered Products Brand
rev: Aug 2026

QCH SERIES
Ceiling-Mounted Fan-Forced Heater



When **floor space is at a premium**, choose this fan-forced ceiling heater. It fits well in offices, bathrooms or lobbies, as well as attic and basement conversions.

Key Features:

Easy Installation

This heater features a simple, three-piece design for rapid installation, whether you choose a recessed mounting or surface application.

Safe Operation

For added safety, the included thermal cutout automatically shuts this heater down if it begins to overheat.

Fan Delay

The heater's fan waits until the desired temperature is achieved before blowing air into the room, and discharges all residual heat before shutting off.

Enhanced Control

This ceiling heater offers dual wattage/voltage models to best fit your onsite power requirements. Plus it has an included on/off switch for safe, simple installation and maintenance.

Technical Specifications:

Temp Range: 45°–95°F
CFM: 65
Grille Gauge: 20

Ideal Spaces:

Basements
Offices
Converted Attics
Bathrooms
Workshops
Lobbies
Hallways
Common Areas

Intertek

White

Scan the QR code to access additional specs and features.

rev: Aug 2026

QCH SERIES
Ceiling-Mounted Fan-Forced Heater

Models & Specifications:

	ITEM INFORMATION		ELECTRICAL DATA			
	CATALOG NO.	UPC	VOLTS	WATTS	AMPS	SHIP WT.
◆	QCH1101F	685360165028	120	1000	8.3	10 lbs
				500	4.7	10 lbs
◆	QCH1151F	685360165035	120	1500	12.5	10 lbs
				750	6.3	10 lbs
◆	QCH1202F	685360165042	240/208	2000/1500	8.3/7.2	10 lbs
				1000/750	4.2/3.6	10 lbs
◆	QCH1207F	685360165059	277/240	2000/1500	7.2/6.3	10 lbs
				1000/750	3.6/3.1	10 lbs

SKU Legend: ◆ **= Popular Products** ● **= Extended Offering** (Contact your local Marley Sales Representative for typically associated lead times)
NOTE: Factory-wired for highest wattage, field-convertible to lower wattages.

Optional Accessories:

CATALOG NO.	UPC	DESCRIPTION	COLOR	SHIP WT.
QCHSM	685360058726	Surface mounting sleeve	White	2 lbs
QCHS1	685360058733	1 in. Semi-Recessed Frame	White	
QCHS2	685360058740	2 in. Semi-Recessed Frame	White	
QCHTBF	685360087382	T-Bar Frame Kit	White	5 lbs

NOTE: Requires two separate leads from heater to single-pole wall thermostat.

Dimensions and Clearances:

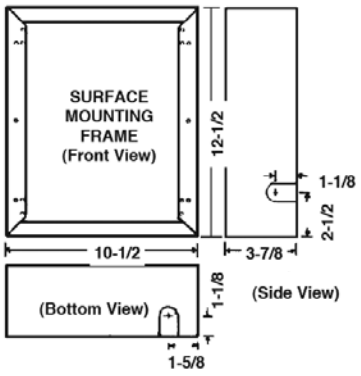

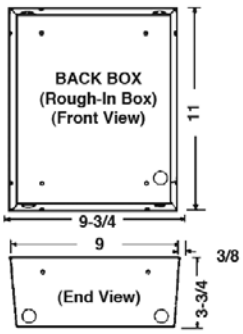

Suggested Controls



MS26 or M601W

rev: Aug 2026

Warm up your workshop or warehouse with a unit heater

For spaces that need industrial-strength heating power, Unit Heaters deliver with powerful, energy-efficient draft protection.

EVERY-DAY VALUE

Low cost

Quick installation

Remote control with automatic shut off



GH48R

PROFESSIONAL VALUE

Top seller

Robust design built for uniform heat distribution and longevity



MWUH — IUH

AESTHETIC & COMFORT VALUE

Fully customizable for ultimate comfort

Wide range of models and control options for any heating solution



MUH

Specialized heaters designed for specified spaces.



Duct Heat

Plenum Heat

Cabinet Unit Heat

Electric unit heaters are strong enough to be used for primary heat and are versatile enough to integrate with existing ductwork or in standalone settings. Specialized unit heaters fit into tight spaces with almost zero clearance.

Customizations AVAILABLE!*

*Customizations not available for all products.

MUH SERIES
Unit Heater



This **rugged** unit heater works well in industrial settings. Its **powerful output capacity** even makes it suitable for heating your loading dock or other indoor/outdoor transition spaces.

Dimensions and Clearances:

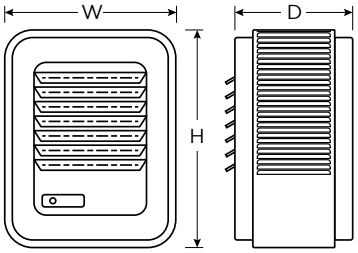

CATALOG NO.	HEIGHT	WIDTH	DEPTH
MUH03 & 05	16″	14″	7 ½″
MUH07 & 10	21 ¾″	19″	7 ½″
MUH15 & 20	21 ¾″	19″	12 ¾″
MUH25 & 30	30″	26 ⅝″	11 ¾″
MUH40 & 50	30″	26 ⅝″	17 ⅛″

Key Features:

Advanced Airflow

This unit heater's pull-through design draws air in across the heating element, so it runs cooler while providing an even blanket of comfort across its output range.

Safe Operation

A linear thermal cutout provides automatic protection the entire length of the heating element. Plus, most models feature a 24V control transformer for safer temperature adjustment.

Precise Positioning

The heater is equipped with individually adjustable louvers that aim your warmth where you need it most. A venturi outlet delivers the additional airflow you need to mount the unit vertically.

Three Times the Metal

The steel sheath heating element is clad in copper and outfitted with aluminum fins. This sophisticated design helps the heater run more safely and cool down faster.

Everything You Need for Installation

This unit heater doesn't require any piping flues, valves or traps. It's self-contained and ready to install wherever you need extra warmth.

Technical Specifications:

Temp Range: 40°–90°F
CFM: 350–3000

Ideal Spaces:

Factories
Warehouses
Garages
Stairwells
Shipping Docks
Power Stations
Mechanical Rooms

c UL us

Beige Bronze

Scan the QR code to access additional specs and features.

For more information visit MarleyMEP.com/Products/Unit-Garage-Heaters

QMARK A Marley Engineered Products Brand

rev: Aug 2026

MUH SERIES
Unit Heater

Models & Specifications:

	ITEM INFORMATION		ELECTRICAL DATA						AIR DELIVERY DATA FAN MOTOR DATA	
	CATALOG NO.	UPC	VOLTS	PHASE	KW	AMPS	BTU/HR.	CONTROL VOLT	CFM	SHIP WT.*
◆	MUH0381	685360047218	208	1	3	14.5	10	208	350	27 lbs
◆	MUH0581	685360047287	208	1-3	5	24	17	208	350	27 lbs
◆	MUH078	685360047355	208	1-3	7.5	36	26	24	650	38 lbs
◆	MUH108	685360047416	208	1-3	10	48	34	24	650	38 lbs
◆	MUH158	685360047454	208	1-3	15	72	51	24	910	53 lbs
◆	MUH0321	685360047164	208/240	1-3	2.2/3.0	11.0/12.5	8/10	208/240	350	27 lbs
◆	MUH0521	685360047225	208/240	1-3	3.7/5.0	18.0/21.0	13/17	208/240	350	27 lbs
◆	MUH072	685360047300	208/240	1-3	5.6/7.5	27.0/31.3	19/26	24	650	38 lbs
◆	MUH102	685360047362	208/240	1-3	7.5/10.0	36.0/42.0	26/34	24	650	38 lbs
◆	MUH152	685360047423	208/240	3	11.2/15.0	31.3/36.1	38/51	24	910	53 lbs
◆	MUH0371	685360047201	277	1	3	11	10	277	350	27 lbs
◆	MUH0571	685360047270	277	1	5	18	17	277	350	27 lbs
◆	MUH077	685360047348	277	1	7.5	27	26	24	650	38 lbs
◆	MUH0341	685360047188	480	3	3	3.6	10	24	350	27 lbs
◆	MUH0541	685360047256	480	3	5	6	17	24	350	27 lbs
◆	MUH074	685360047324	480	3	7.5	9	26	24	650	38 lbs
◆	MUH104	685360047386	480	3	10	12	34	24	650	38 lbs
◆	MUH154	685360047430	480	3	15	18	51	24	910	53 lbs
●	MUH208	685360047492	208	3	20	56	68	24	1320	60 lbs
●	MUH202	685360047461	208/240	3	15.0/20.0	41.2/48.0	51/68	24	1320	60 lbs
●	MUH204	685360047478	480	3	20	24	68	24	1320	60 lbs
●	MUH254	685360047515	480	3	25	30	85	24	2100	93 lbs
●	MUH304	685360047546	480	3	30	36	102	24	2100	93 lbs
●	MUH404	685360047614	480	3	40	48	137	24	3000	114 lbs
●	MUH504	685360047645	480	3	50	60.2	171	24	3000	114 lbs
●	MUH308	685360047560	208	3	30	84	102	24	2100	93 lbs
●	MUH252	685360047508	208/240	3	18.7/25.0	52.0/60.0	64/85	24	2100	93 lbs
●	MUH302	685360047539	208/240	3	22.5/30.0	63.0/72.3	77/102	24	2100	93 lbs
●	MUH402	685360047607	208/240	3	30.0/40.0	83.4/96.4	102/137	24	3000	114 lbs
●	MUH502	685360047638	208/240	3	37.5/50.0	104.2/120.4	128/171	24	3000	114 lbs
●	MUH107	685360047409	277	1	10	36	34	24	650	38 lbs
●	MUH073	685360047317	347	1	7.5	21.6	26	24	650	38 lbs
●	MUH103	685360047379	347	1	10	28.8	34	24	650	38 lbs
●	MUH0361	685360047195	600	3	3	2.9	10	24	350	27 lbs
●	MUH0561	685360047263	600	3	5	4.8	17	24	350	27 lbs
●	MUH076	685360047331	600	3	7.5	7.3	26	24	650	38 lbs
●	MUH106	685360047393	600	3	10	9.7	34	24	650	38 lbs
●	MUH156	685360047447	600	3	15	14.5	51	24	910	53 lbs
●	MUH206	685360047485	600	3	20	19.3	68	24	1320	60 lbs
●	MUH256	685360047522	600	3	25	24.2	85	24	2100	93 lbs
●	MUH306	685360047553	600	3	30	29	102	24	2100	93 lbs
●	MUH406	685360047621	600	3	40	38.7	137	24	3000	114 lbs
●	MUH506	685360047652	600	3	50	48.3	171	24	3000	114 lbs

SKU Legend: ◆ **= Popular Products** ● **= Extended Offering** (Contact your local Marley Sales Representative for typically associated lead times)

"1-3" phase denotes field convertible to 3-Phase

NOTE: All standard units are supplied with a low voltage control transformer and contactor (24V). Reference the appropriate Bundled Accessory table below for the standard accessories available out of the box with each PRO and PRO+ model.

MUH SERIES
Unit Heater

Optional Accessories:

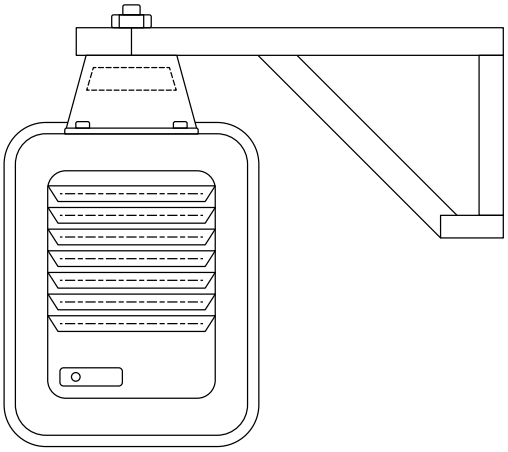

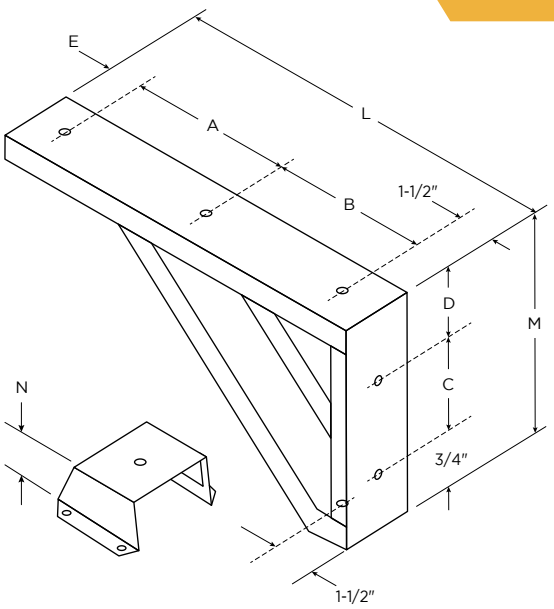

	3–20 kW	25–50 kW
A	7 ¼"	9 7⁄16"
B	9 ½"	14 ⅜"
C	7 ¼"	12 ⅛"
D	11 5⁄16"	2 1⁄16"
E	2 ¼"	3"
L	20 ½"	28 15⁄16"
M	9 15⁄16"	14 15⁄16"
N	3 ¼"	4 ½"

Optional Mounting Brackets:

	CATALOG NO.	UPC	COMPATIBILITY	SHIP WT.*
Standard	B10	685360152295	MUH03–10	8 lbs
	MCB105PK	685360173627	(Master Pack, Five B10 Brackets)	
	B20	685360152301	MUH15 & 20	10 lbs
	B30	685360152318	MUH25 & 30	13 lbs
	B50	685360152325	MUH40 & 50	15 lbs
Ceiling	CMB10	685360152363	MUH03–10	3 lbs
	CMB20	685360152370	MUH15 & 20	4 lbs
	CMB30	685360152387	MUH25 & 30	5 lbs
	CMB50	685360152394	MUH40 &50	6 lbs
Vertical Ceiling	VDMB5	685360152455	MUH03–05	5 lbs
	VDMB20	685360152462	MUH07–20	7 lbs
	VDMB50	685360152479	MUH25–50	9 lbs
Remote Thermostats	MUHBKT-TST-SM	685360175089	MUH 3–20kw	2 lbs
	MUHBKT-TST-L	685360175096	MUH 25-50kw	2 lbs

MOUNTING LIMITATIONS: Unit heaters should not be used in potentially explosive atmospheres. The finish is not intended for direct salt spray exposure in marine applications or the highly corrosive atmospheres of swimming pools, chemical storage bins, etc. Do not install unit heaters above recommended maximum mounting height. Obstructions must not block unit heater air inlet or discharge. Heaters must be mounted at least 7 ft. above the floor to prevent accidental contact with the heating element or fan blade which could cause injury.

Optional Dust Shields:

CATALOG NO.	UPC	COMPATIBILITY	SHIP WT.*
JRDS8	685360150697	3–5 KW units	5 lbs
JRDS14	685360150673	15–20 KW units	6 lbs
JRDS19	685360150680	25–50 KW units	10 lbs

Diffuser Selector Table:

CATALOG NO.	UPC	COMPATIBILITY	SHIP WT.*
MUHLDS	685360036656	Louvered Diffuser for 3 & 5KW Units	5 lbs
MUHLDM	685360036649	Louvered Diffuser for 7.5–20KW Units	8 lbs
MUHLDL	685360036632	Louvered Diffuser for 25–50KW Units	10 lbs

Optional Field-Installed Electrical Controls:

CATALOG NO.	UPC	DESCRIPTION	ELECTRICAL RATING
UHMT1*	685360152417	Single Pole Internal Thermostat-Temp Range: 40°– 85°F	25A @ 120, 240VAC Res. 22A @ 277VAC Res.
UHMT2	685360152424	Two Stage Internal Thermostat-Temp. Range: 40°– 85°F	25A @ 120, 240VAC Res. 22A @ 277VAC Res. 125VA
MCFS	685360046372	Internal Summer Fan Switch 250, 480, 600V.A.C. 1,2 OR 3 PH	Pilot Duty 6A, 600VAC Res. 2 HP
MRFS1	685360047089	Remote Summer Fan Switch (Line Voltage)	2 HP, 250-480VAC
MRFS2	685360047096	Remote Summer Fan Switch with Relay (24V Coil-Single Pole Normally Open)	6 AFL, 35 ALR, 250VAC, 60Hz. 3 AFL, 18 ALR, 480VAC, 60Hz
MHRT	685360046945	Heat Recovery Thermostat with Relay (24V Coil-Single Pole Normally Open) Hi — 120°F, Low — 60°F	6 AFL, 35 ALR, 250VAC, 60Hz 3 AFL, 18 ALR, 480VAC, 60Hz
MPDS25	685360047034	Power Disconnect Switch (3-Pole)	30A @ 600VAC, Res.
MPDS60	685360047041	Power Disconnect Switch (3-Pole)	80A @ 600VAC, Res.

*"-S" version available as a suitable alternative

NOTE: Any field installed options assembled in the factory require added surcharge. See price book for charges. MPDS60 disconnect switch is not suitable for field installation on 7.5kw and 10kw unit heaters. Visit website or contact your local representative for compatibility details.

Diffusers for Vertical Mounting:

No Diffuser:
No diffuser needed where a straight downflow air pattern is required. For maximum air throw, remove louvers. Any of three diffusers can be added to basic heater.

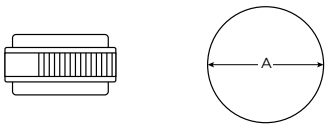

Louver Diffuser:
Permits directional (straight line) air flow as in air curtain application over doorways. Rectangular coverage, Louvers can be turned in either direction.

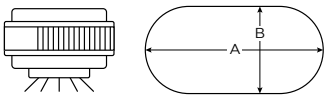

NOTE: Visit website or contact your local representative for additional details

Suggested Controls



Now compatible with SmartSeries Plus when used with 24VAC control transformer!

For more information visit MarleyMEP.com/Products/Unit-Garage-Heaters

QMARK A Marley Engineered Products Brand

rev: Aug 2026

MUH-PRO SERIES
Bundled Unit Heater

Comfort, Convenience, and Connected

The MUH-PRO Series Unit Heaters are the same great MUH unit heater you rely on every day and now with bundle options to customize your comfort. Bundled options include our most popular safety and control accessories designed to make heating your space effortless and ordering a breeze.

MUH SERIES
Basic Model



When you need heat fast, this heater goes right to work.

Works with existing remote-mounted thermostats.

Ideal for replacement projects when no additional accessories are needed.

NEW PRODUCT!

MUH-PRO SERIES
Pro Bundle



The Pro Bundle includes the MUH Series Unit Heater with our most popular accessories.

Bundling accessories saves time and money.

Includes 24VAC Transformer for easy low voltage thermostat connection and future proofing.

Includes disconnect switch for safe and easy maintenance or repair.

Includes built-in single state thermostat for easy operation right out of the box.

MUH-PRO+ SERIES
Pro+ Bundle



Take your heat to the next level with the MUH-Pro+ Series bundled with all the accessories you need.

Includes SmartSeries® Plus thermostat and B10 mounting bracket.

Connects to BACnet MS/TP Building Management Systems for easy control and monitoring.

Digital touchscreen with 7-day programmability for easy scheduling when BMS is not available.

Built-in cooling mode, keypad lock and programmable vacation mode with no extra components.

Includes disconnect switch for safe and easy maintenance or repair.

Scan the QR code to access additional specs and features.

For more information visit MarleyMEP.com/Products/Unit-Garage-Heaters

rev: Aug 2026

MUH-PRO SERIES
Bundled Unit Heater

Models & Specifications:

	ITEM INFORMATION		ELECTRICAL DATA						AIR DELIVERY DATA FAN MOTOR DATA	
	CATALOG NO.	UPC	VOLTS	PHASE	KW	AMPS	BTU/HR.	CONTROL VOLT	CFM	SHIP WT.*
◆	MUH0381-PRO	685360173818	208	1	3	14.5	10	24	350	27 lbs
◆	MUH0381-PRO-SSP	685360174631	208	1	3	14.5	10	24	350	27 lbs
◆	MUH0581-PRO	685360173825	208	1-3	5	24	17	24	350	27 lbs
◆	MUH0581-PRO-SSP	685360174600	208	1-3	5	24	17	24	350	27 lbs
◆	MUH078-PRO	685360173832	208	1-3	7.5	36	26	24	650	38 lbs
◆	MUH078-PRO-SSP	685360174693	208	1-3	7.5	36	26	24	650	38 lbs
◆	MUH108-PRO	685360173849	208	1-3	10	48	34	24	650	38 lbs
◆	MUH108-PRO-SSP	685360174716	208	1-3	10	48	34	24	650	38 lbs
◆	MUH0321-PRO	685360173856	208/240	1	2.2/3.0	11.0/12.5	10	24	350	27 lbs
◆	MUH0321-PRO-SSP	685360174617	208/240	1	2.2/3.0	11.0/12.5	10	24	350	27 lbs
◆	MUH0521-PRO	685360173863	208/240	1-3	3.7/5.0	18.0/21.0	17	24	350	27 lbs
◆	MUH0521-PRO-SSP	685360174648	208/240	1-3	3.7/5.0	18.0/21.0	17	24	350	27 lbs
◆	MUH072-PRO	685360173870	208/240	1-3	5.6/7.5	27.0/31.3	26	24	650	38 lbs
◆	MUH072-PRO-SSP	685360174679	208/240	1-3	5.6/7.5	27.0/31.3	26	24	650	38 lbs
◆	MUH102-PRO	685360173887	208/240	1-3	7.5/10.0	36.0/42.0	34	24	650	38 lbs
◆	MUH102-PRO-SSP	685360174662	208/240	1-3	7.5/10.0	36.0/42.0	34	24	650	38 lbs
◆	MUH0341-PRO	685360173894	480	3	3	3.6	10	24	350	27 lbs
◆	MUH0341-PRO-SSP	685360174624	480	3	3	3.6	10	24	350	27 lbs
◆	MUH0541-PRO	685360173900	480	3	5	6	17	24	350	27 lbs
◆	MUH0541-PRO-SSP	685360174655	480	3	5	6	17	24	350	27 lbs
◆	MUH074-PRO	685360173917	480	3	7.5	9	26	24	650	38 lbs
◆	MUH074-PRO-SSP	685360174686	480	3	7.5	9	26	24	650	38 lbs
◆	MUH104-PRO	685360173924	480	3	10	12	34	24	650	38 lbs
◆	MUH104-PRO-SSP	685360174709	480	3	10	12	34	24	650	38 lbs

SKU Legend: ◆ **= Popular Products** ● **= Extended Offering** (Contact your local Marley Sales Representative for typically associated lead times)

"1-3" phase denotes field convertible to 3-Phase

NOTE: All standard units are supplied with a low voltage control transformer and contactor (24V). Reference the appropriate Bundled Accessory table below for the standard accessories available out of the box with each PRO and PRO+ model. Shipping weight includes mounting bracket.

On dual-voltage units CFM, FPM, & RPM ratings are listed at higher voltage operation. On dual-phase units maximum amp draw is listed for respective voltage.

MUH-PRO SERIES
Bundled Unit Heater

MUH-Pro Bundled Accessories:

ACCESSORY	DESCRIPTION
24VAC Transformer	Takes incoming line voltage and drops it to low voltage (24VAC) to be used with low voltage thermostats.
Disconnect Switch	A three pole non-fused disconnect switch disconnects power to the heater. Design prevents entry into the control compartment until disconnect switch is turned to the OFF position.
Built-In Single Stage Thermostat	Built-in single stage thermostat with adjustable knob to have heater run until demand is satisfied.

MUH-Pro+ Bundled Accessories:

ACCESSORY	DESCRIPTION
24VAC Transformer	Takes incoming line voltage and drops it to low voltage (24VAC) to be used with low voltage thermostats.
Disconnect Switch	A three pole non-fused disconnect switch disconnects power to the heater. Design prevents entry into the control compartment until disconnect switch is turned to the OFF position.
SmartSeries® Plus thermostat	Remote Mount two stage thermostat runs 2/3 elements on stage 1 and full heat for stage 2. Fan cycles on high speed only. Comes with BACnet BMS compatibility, scheduling, cooling mode (Fan-Only), and keypad lock.
B10 mounting bracket	Used to easily mount the unit heater to the wall

Dimensions and Clearances:

CATALOG NO.	HEIGHT	WIDTH	DEPTH
MUH03 & 05	16″	14″	7 ½″
MUH07 & 10	21 ¾″	19″	7 ½″

	3–20 kW
A	7″
B	9 ½″
C	7 ¼″
D	11 5⁄16″
E	2 ¼″
L	20 ½″
M	9 15⁄16″
N	3 ¼″

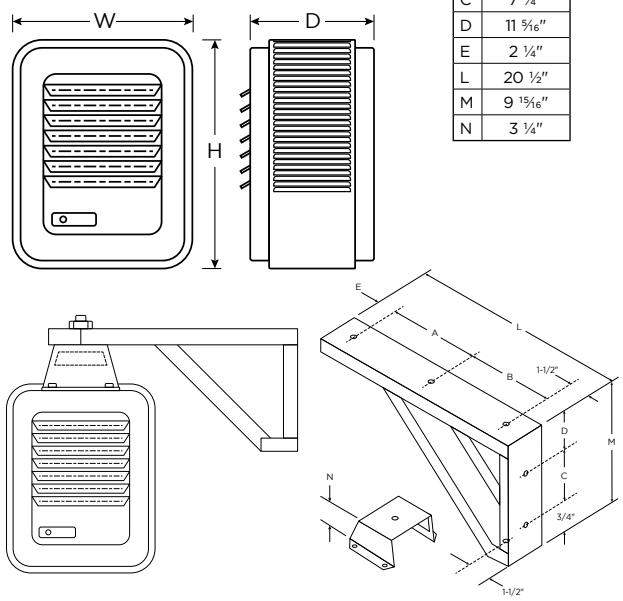

Optional Mounting Brackets:

	CATALOG NO.	UPC	COMPATIBILITY	SHIP WT.*
Standard	B10	685360152295	MUH03–10	8 lbs
Ceiling	CMB10	685360152363	MUH03–10	3 lbs
Vertical Ceiling	VDMB5	685360152455	MUH03–05	5 lbs
	VDMB20	685360152462	MUH07–20	7 lbs

Optional Dust Shields:

CATALOG NO.	UPC	COMPATIBILITY	SHIP WT.*
JRDS8	685360150697	3–10 KW units	5 lbs

MOUNTING LIMITATIONS: Unit heaters should not be used in potentially explosive atmospheres. The finish is not intended for direct salt spray exposure in marine applications or the highly corrosive atmospheres of swimming pools, chemical storage bins, etc. Do not install unit heaters above recommended maximum mounting height. Obstructions must not block unit heater air inlet or discharge. Heaters must be mounted at least 7 ft. above the floor to prevent accidental contact with the heating element or fan blade which could cause injury.

Diffuser Selector Tables for Vertical Mounting

CATALOG NO.	DESCRIPTION	COMPATIBILITY	MAX. MOUNTING HEIGHT	(A) DIMENSION	DIFFUSER PATTERN AND AREA
–	No Diffuser: No diffuser needed where a straight downflow air pattern is required. For maximum air throw, remove louvers. Any of three diffusers can be added to basic heater.	MUH03 & MUH05	9	18 (A)	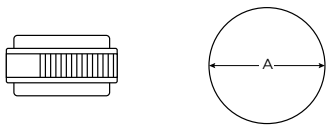
–		MUH07 & MUH10	14	26 (A)	
MLDS	Louver Diffuser: Permits directional (straight line) air flow as in air curtain application over doorways. Rectangular coverage, Louvers can be turned in either direction.	MUH03 & MUH05	9	25(A) 12(B)	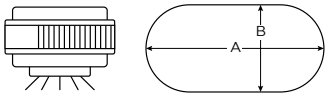
MLDM		MUH07 & MUH10	14	25(A) 12(B)	

For more information visit MarleyMEP.com/Products/Unit-Garage-Heaters

rev: Aug 2026

IUH SERIES
Industrial Unit Heater



This heavy-duty heater provides a **long-term comfort solution** wherever you need to warm up — garages, workshops, basements, even outdoor spaces. Aim heat anywhere with adjustable louvers and **flexible mounting options** for both horizontal and vertical applications.

Key Features:

Long-lasting Comfort
If you've got a constantly cold and drafty garage, basement or workshop, this heavy-duty heater provides a worthy long-term solution. Its powerful output means you can even use it to warm outdoor areas.

Conforms to Your Power System
Whether you need 208 or 240 volts, this heater is fully compatible with your electrical system.

Control Your Output
Multiple wattages enable you to set your heat output level to deliver as much warmth as you need.

Directional Heating
This model features adjustable louvers, so you can aim your heat directly toward your desired area and redirect it whenever your heating needs change.

Install Anywhere
This heater easily makes room for itself. With an optional mounting bracket, this unit can be easily installed vertically or horizontally in any room.

Scan the QR code to access additional specs and features.

Technical Specifications:

Temp Range: 45°–90°F
CFM: 270–1800

Ideal Spaces:

Factories
Garages
Stockrooms
Stores
Maintenance Rooms
Warehouses
Service Stations
Workshops
Stairwells

Beige

rev: Aug 2026

IUH SERIES
Industrial Unit Heater

Models & Specifications:

	ITEM INFORMATION		ELECTRICAL DATA						
	CATALOG NO.	UPC	KW	BTU/HR.	VOLTAGE	PHASE	MAX AMPERAGE 3 PHASE	CFM	WEIGHT
◆	IUH520	685360041964	5**	17	208	1–3	12.5	270	26 lbs
◆	IUH548	685360042022	5**	17	480	1–3	6	270	31 lbs
◆	IUH724	685360042091	7.5**	25.6	240	1–3	18.1	270	27 lbs
◆	IUH748	685360042121	7.5**	25.6	480	1–3	9	270	31 lbs
◆	IUH1020	685360041759	10	34.1	208	1–3	27.8	500	72 lbs
◆	IUH1024	685360041766	10	34.1	240	1–3	25.7	500	62 lbs
◆	IUH1048	685360041803	10	34.1	480	1–3	12.8	500	72 lbs
◆	IUH1520	685360041834	15	51.2	208	1–3	42	750	78 lbs
◆	IUH1524	685360041841	15	51.2	240	1–3	37.7	750	68 lbs
◆	IUH1548	685360041872	15	51.2	480	1–3	18.8	750	78 lbs
◆	IUH2048	685360041902	20	68.2	480	1–3	24.8	1000	78 lbs
◆	IUH3048	685360041940	30	102.2	480	3	36.9	1800	142 lbs
●	IUH524	685360041971	5**	17	240	1–3	13.8	270	26 lbs
●	IUH2548	685360041926	25	85.2	480	3	31.1	1300	136 lbs
●	IUH560	685360042046	5**	17	600	3	4.8	270	31 lbs
●	IUH760	685360042145	7.5**	25.6	600	3	7.2	270	31 lbs
●	IUH1060	685360041827	10	34.1	600	3	9.6	500	72 lbs
●	IUH1560	685360041889	15	51.2	600	3	14.5	750	80 lbs
●	IUH2060	685360041919	20	68.2	600	3	19.3	1000	80 lbs
●	IUH2560	685360041933	25	85.2	600	3	24	1300	142 lbs
●	IUH3060	685360041957	30	102.2	600	3	28.9	1800	142 lbs

SKU Legend: ◆ **= Popular Products** ● **= Extended Offering** (Contact your local Marley Sales Representative for typically associated lead times)

**5 kW and 7.5 kW can be used in horizontal or vertical position. Heaters come equipped with ceiling mounting bracket for horizontal or vertical flow mounting or any position between.

Optional Accessories:

CATALOG NO.	UPC	DESCRIPTION	SHIP WT.
CWB1A	685360018201	Combination wall/ceiling bracket for 5KW thru 15KW units	4 lbs
CWB2A	685360152400	Same as above but for 20KW thru 50KW units	14 lbs
UHTA1	685360152431	Single-Pole Thermostat kit 60-120°F temp. range for field installation in all units	1 lbs
IUHDS30*	685360019956	3-pole power disconnect switch kit for field installation on all horizontal unit heaters rated 24 amps or less.	1 lbs
IUHDS63*	685360019963	3-pole power disconnect switch kit for field installation on all horizontal unit heaters 10KW and above rated 24 to 50 amps.	1 lbs
IUHSW	685360036724	Summer-Winter Fan Switch Kit. Field installed. Provides summer fan operation.	1 lbs

Dimensions and Clearances:

KW Size	A	B	C	D	E	F	G	H	I	J
5–7.5	14″	12 ½″	12 ⅜″	5 ½″	13″	1 ¾″	1 ⅜″	1 ½″	(2) ½″, ¾″	½″
10–20	18″	18″	17 ½″	9 15⁄32″	*	2″	2 ½″	2 ¼″	(2) ¾″, 1″	(3) 1″, 1 ¼″, 1 ½″
25–30	26″	24″	23 ⅛″	9 15⁄32″	20″	2″	2 ¾″	2 ¼″	(2) 1″, 1 ½″	(3) 1″, 1 ½″, 2″

*13 in. for 10-15 kW units; 16 in. for 20 kW unit. 5 kW and 7.5 kW can be used in horizontal or vertical position. Heaters come equipped with ceiling mounting bracket for horizontal or vertical flow mounting or any position between.

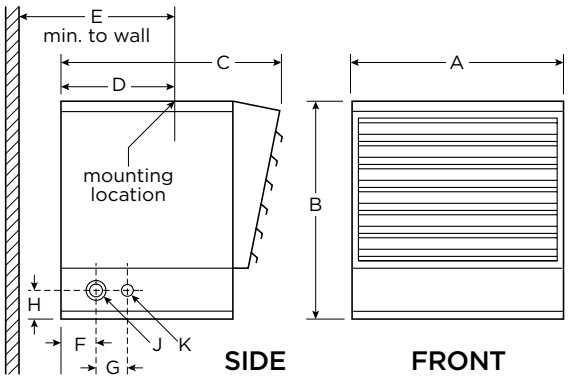

For more information visit MarleyMEP.com/Products/Unit-Garage-Heaters

QMARK A Marley Engineered Products Brand

rev: Aug 2026

MWUH SERIES
Bundled Horizontal/Downflow Unit Heater

Limited space? We've got your customized comfort covered.

Choose the IUH Series Horizontal/Downflow Unit Heater for basic heating or the MWUH Bundle with an included mounting bracket and built-in thermostat for one-stop-shopping. Both have adjustable louvers and flexible mounting options that enable you to take aim at the cold. Best of all, both heaters will keep your coldest spots warm and comfortable for years to come.

IUH SERIES

Basic Model



Unit comes with adjustable louvers to control airflow and put the heat where it is needed

Robust elements are designed to keep your space comfortable for the long haul

Variety of sizes and accessories to meet the demands of any given space

MWUH SERIES

Bundle



Includes the great features of the IUH plus mounting bracket and built-in thermostat

Ceiling/Wall mounting bracket gives you ease and flexibility for installation

The built-in thermostat gives you control to keep the space at the perfect temperature

All the necessary features in one box make this heater the bestselling unit heater

Scan the QR code to access additional specs and features.

rev: Aug 2026

MWUH SERIES
Bundled Horizontal/Downflow Unit Heater

Models & Specifications:

	ITEM INFORMATION		ELECTRICAL DATA				
	CATALOG NO.	UPC	VOLTS	WATTS	BTU/HR.	HEATER AMPS	SHIP WT.
◆	MWUH5004	685360038803	208	1874	6396	9	24 lbs
				2500	8553	12	
				3123	10659	15	
				3750	12799	18	
			240	2500	8533	10.4	
				3332	11365	13.9	
				4165	14215	17.4	
				5000	17065	20.9	
◆	MWUH7504	685360148700	208	2812	9598	13.5	27 lbs
				3750	12799	18	
				4685	15990	22.5	
				5625	19198	27.1	
			240	3750	12799	15.6	
				5000	17065	20.8	
				6250	21331	26	
				7500	25598	31.3	
●	MWUH5008	685360047713	208	2500	8533	12	26 lbs
				3332	11365	16	
				4165	14215	20	
				5000	17065	24	

SKU Legend: ◆ **= Popular Products** ● **= Extended Offering** (Contact your local Marley Sales Representative for typically associated lead times)

NOTE: Disconnect switch (DS30) option available for heaters 24 amps or lower. Units come factory wired to higher wattages. Additional wattages can be achieved with field rewiring per instruction manual.

Controls and Accessories:

	CATALOG NO.	DESCRIPTION
	DS30	3-pole power disconnect switch for field installation on all heaters. Complies with "positive off" requirements.
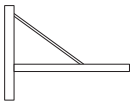	CWB1A	Wall mounting brackets for all units. (Ceiling mounting bracket is included with all heaters.)

Dimensions and Clearances:

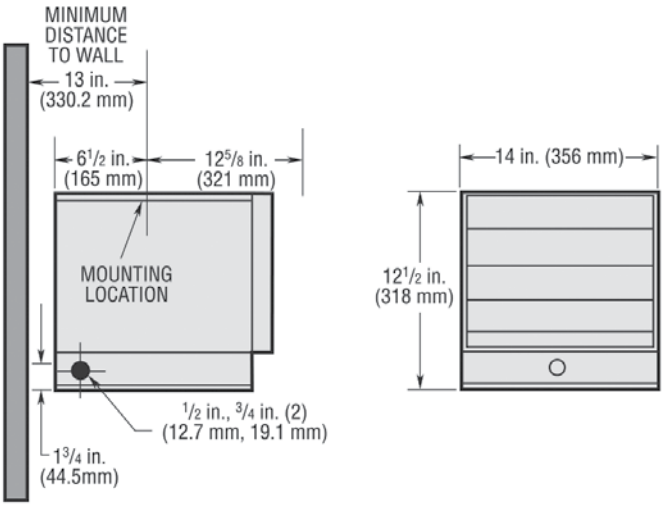

rev: Aug 2026

MUH35 SERIES
Unit Heater



For primary or spot heating in factories, warehouses, garages, and other **open areas**, these unit heaters excel. With a **variety of mounting and airflow options**, you can create just the right comfort level for your space.

Dimensions and Clearances:

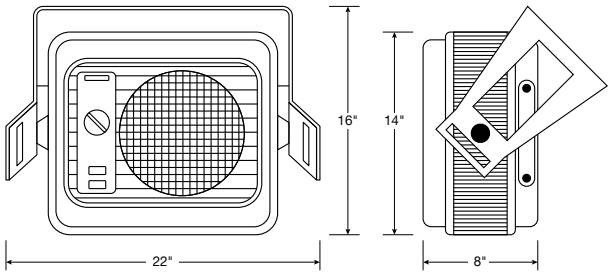

Key Features:

Angle Your Airflow
These unit heaters are designed for maximum flexibility. Install them to create vertical or horizontal airflow patterns or direct them at any angle you desire.

Space Saving Solution
With an included mounting bracket, you can install these unit heaters on a wall or ceiling to make best use of your available installation space and to cover the widest area possible.

Temperature Control
These unit heaters feature a built-in bimetal thermostat, plus a heat selector switch that allows you to select the right wattage for your space.

Fan Only Operation
When you don't need extra heat, set this unit heater to fan only mode for extra airflow and cooling.

Technical Specifications:

Temp Range: 40°–90°F
CFM: 210

Ideal Spaces:

Factories
Garages
Schools
Shipping Docks
Warehouses

Bronze

Models & Specifications:

ITEM INFORMATION			ELECTRICAL DATA				
	CATALOG NO.	UPC	VOLTS	WATTS	BTU/HR.	AMPS	SHIP WT.
◆	MUH35	685360047597	240	5000/3333	17060/11372	21.0/14.0	28 lbs
			208	3750/2500	12795/8530	18.0/12.0	

SKU Legend: ◆ **= Popular Products** ● **= Extended Offering** (Contact your local Marley Sales Representative for typically associated lead times)

Optional Accessories:

CATALOG NO.	UPC	DESCRIPTION
PHCS1B	685360150703	Cord & Plug Assembly (Optional)

Scan the QR code to access additional specs and features.

rev: Aug 2026

GH48R SERIES
Digital Remote-Controlled Garage Heater



Remote control requires (2) AAA batteries. Not included.

Turn your cold garage into a **year-round usable living space** with this robust, reliable fan-forced garage heater. The included bracket makes for easy installation on the wall or ceiling of your garage, workshop or stockroom. The included remote control and timer feature make it simple to set the right temperature and to make sure the heater is **only running when you need it**.

Key Features:

Warm Up Cold Spaces
This powerful heater can go beyond the garage — install it in storage areas stockrooms, workshops, or any other space you need primary or supplemental heat.

Long-Lasting Performance
The unit's built-in fan delay is designed to prolong the life of your heating element.

Total Control
A 9-hour timer with automatic shutoff brings the heat when you need it, while the integrated thermostat ranges from 45° to 99° F to handle your specific garage conditions.

Easy Viewing
The easy-to-read digital LED interface lets you tell at a glance what the current temperature level is.

Stay in Control
The included remote allows you to set your perfect temperature even from across the room.

Technical Specifications:

Temp Range: 45°–99°F
CFM: 160

Ideal Spaces:

Garages
Workshops
Stockrooms
Mechanical Spaces

Intertek

Black

Models & Specifications:

ITEM INFORMATION			ELECTRICAL DATA				
	CATALOG NO.	UPC	VOLTS	WATTS	AMPS	BTU/HR.	SHIP WT.
◆	GH48R	685360165691	240	2400/4800	10/20	8189/16,378	13 lbs
			208	1800/3600	8.6/17.3	6142/12,284	

SKU Legend: ◆ = **Popular Products** ● = **Extended Offering** (Contact your local Marley Sales Representative for typically associated lead times)
Includes mounting bracket for wall or ceiling installation

Scan the QR code to access additional specs and features.

QMARK A Marley Engineered Products Brand
rev: Aug 2026

THE MARLEY ENGINEEREED PRODUCTS BIM LIBRARY

Bringing you Revit Families from the Best in the Industry



Learn more at MarleyMEP.com/Bim-Revit-Library

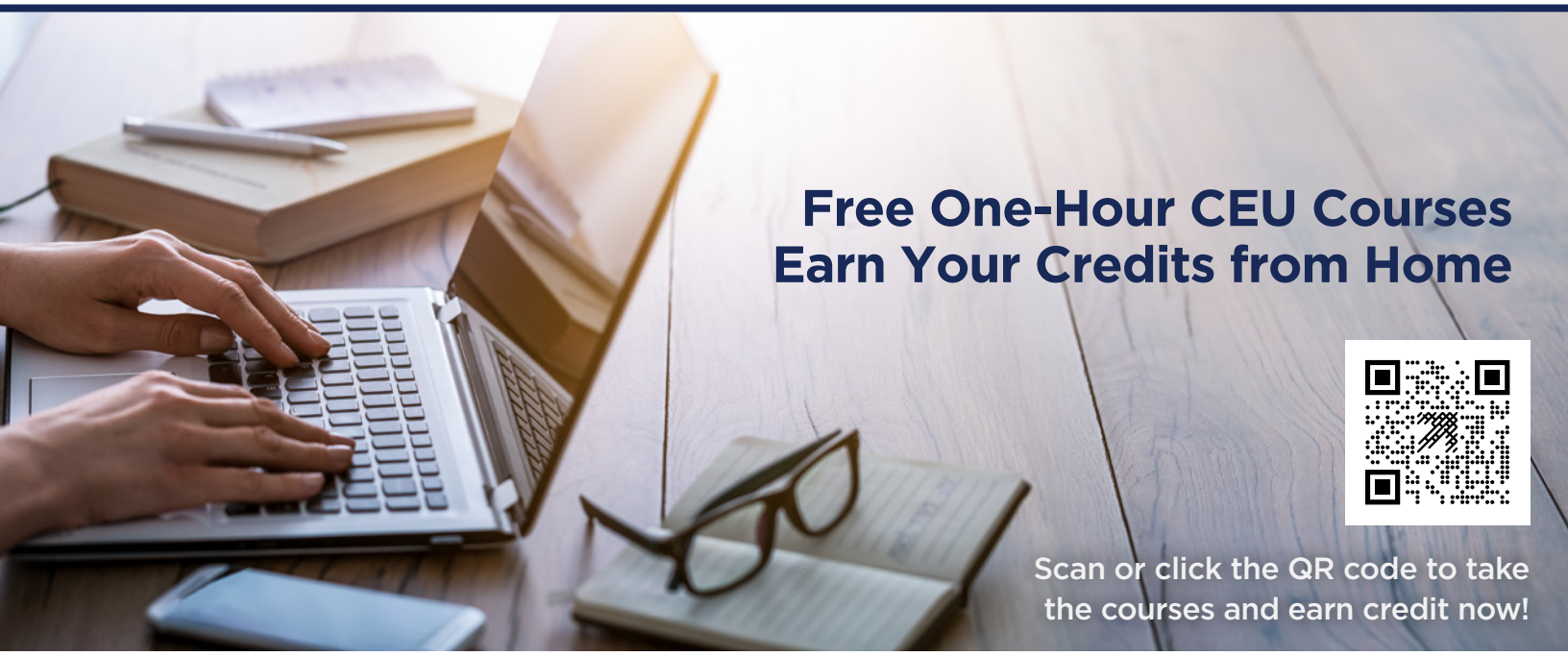

Free One-Hour CEU Courses
Earn Your Credits from Home

Scan or click the QR code to take the courses and earn credit now!

@AECDAILY

AIA Continuing Education Provider

EDUCATION PARTNER

Marley Engineered Products is a Proud Partner of AECDaily.`

CUS900 SERIES
Stock Cabinet Unit Heater

Stock Cabinet Heater with SmartSeries® Plus Controls

Supplemental heat doesn't have to compromise contemporary design. The Stock Cabinet Unit Heater with SmartSeries Plus Controls combines modern design with advanced features making this a smart choice for your supplemental heating needs.

Technical Specifications:

Temp Range: 55°–85°F | **CFM**: 400–1000

c UL us

White

Ideal Spaces:

School Hallways & Churches
Transportation Terminals
Lobbies & Stairwells
Entrance Ways & Vestibule
Mechanical Rooms

FFW MODEL

Basic Model

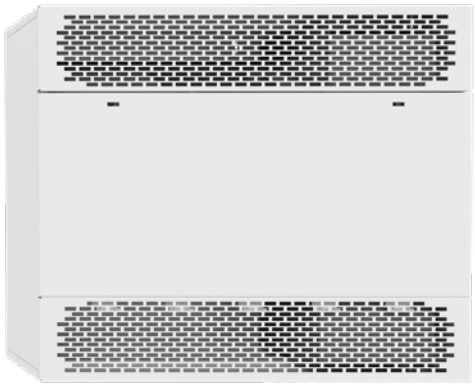

Contemporary design to match modern and future architect specifications

Comes with 24VAC transformer, built-in single stage thermostat, disconnect switch, heat high or low, on/off switch, and 1 to 3 phase conversion

Gives the user the control and features they need all in one package

Newly designed front hinge panel locks in place to allow easy and safe installation or maintenance

FFWD MODEL

Pro+ Bundle

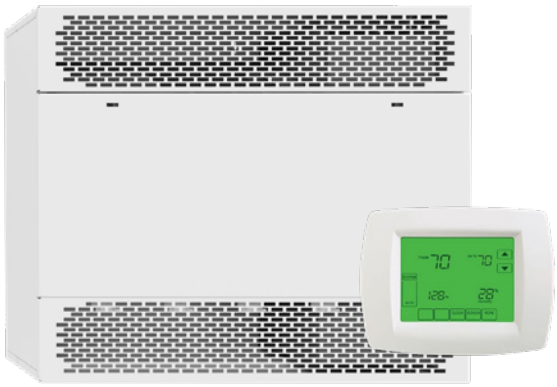

Adds the benefits of the SmartSeries® Plus to the stock Cabinet Unit Heater

The SmartSeries Plus allows user to connect to a BACnet MS/TP Building Management System for easy control and monitoring of product

Digital Touchscreen with 7 day programmability makes it easy to set a schedule if BMS is not needed

Cooling Mode, Keypad lock, and vacation mode add extra value with no extra components

Scan the QR code to access additional specs and features.

NEW PRODUCT!

For more information visit MarleyMEP.com/Products/Unit-Garage-Heaters

QMARK A Marley Engineered Products Brand

rev: Aug 2026

CUS900 SERIES
Stock Cabinet Unit Heater

Stock Cabinet Unit Heaters: Models & Specifications:

Convertible Models											
ITEM INFORMATION										DIMENSIONAL DATA	
	CATALOG NO.	UPC	WATTAGE (KW)	BTU/HR	FINAL AIR TEMP	CFM HI	CFM LO	VOLTS/PH.	AMPS	DIM	SHIP WT.
◆	CUS93505203FFW	685360174051	5	17,060	90° F	500	400	208V/3Ø	14	35" W 26 ⅜" H 9 ⅞" D	120 lbs
◆	CUS93505203FFWD	685360174068			90° F	500	400	208V/3Ø	14		120 lbs
◆	CUS93505243FFW	685360174075			90° F	500	400	240V/3Ø	12		120 lbs
◆	CUS93505243FFWD	685360174082			90° F	500	400	240V/3Ø	12		120 lbs
◆	CUS93505483FFW	685360174099			90° F	500	400	480V/3Ø	6		120 lbs
◆	CUS93505483FFWD	685360174105			90° F	500	400	480V/3Ø	6		120 lbs
◆	CUS94510203FFW	685360174112	10	34,121	90° F	1,000	800	208V/3Ø	34	45" W 26 ⅜" H 9 ⅞" D	120 lbs
◆	CUS94510203FFWD	685360174129			90° F	1,000	800	208V/3Ø	34		120 lbs
◆	CUS94510243FFW	685360174136			90° F	1,000	800	240V/3Ø	15		120 lbs
◆	CUS94510243FFWD	685360174143			90° F	1,000	800	240V/3Ø	15		120 lbs
◆	CUS94510483FFW	685360174150			90° F	1,000	800	480V/3Ø	12		120 lbs
◆	CUS94510483FFWD	685360174167			90° F	1,000	800	480V/3Ø	12		120 lbs

SKU Legend: ◆ **= Popular Products** ● **= Extended Offering** (Contact your local Marley Sales Representative for typically associated lead times)
*Factory supplied 208V or 240V, 3PH field convertible to 1 PH, 480V 3 PH convertible to 277V 1 PH, 600V 3 PH convertible to 347V 1 PH. **Amps shown are 3 PH, High heat operation. Field Convertible to 1PH.

Dimensions and Clearances:

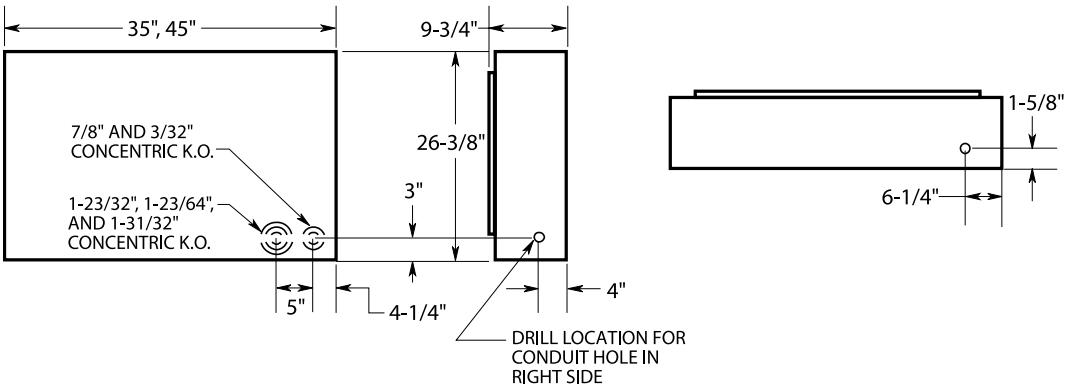

Multiple Air Flow Combinations

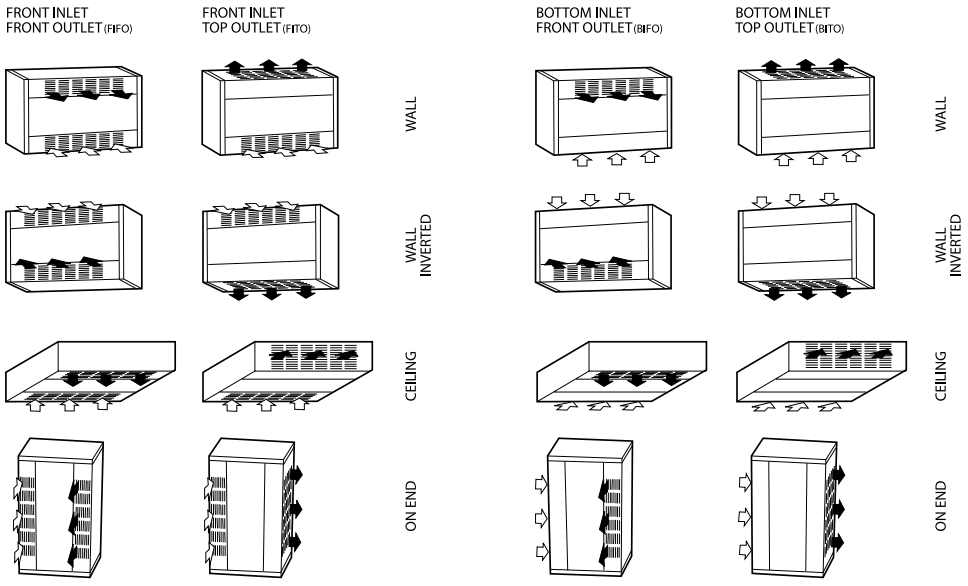

Suggested Controls



Now compatible with SmartSeries® Plus when used with 24VAC control transformer!

For more information visit MarleyMEP.com/Products/Unit-Garage-Heaters

rev: Aug 2026

CUS900 SERIES
Stock Cabinet Unit Heater

Optional Accessories:

CATALOG NO.	DESCRIPTION	COMPATIBLE WITH	FUNCTION	SHIP WT.
CU935RTKW	Ceiling or Wall Recess Trim Kit	CU935	Provides a neat finish to semi-recessed or full recessed application.	3 lbs
CU945RTKW		CU945		4 lbs
CU935BKW	Floor/Toe-Space Base Kit	CU935	16 gauge, muted black base is recessed from the heater front and sides to provide an attractive and practical floor mounting application.	9 lbs
CU945BKW		CU945		10 lbs
CU935WF	Permanent, Reusable Washable Filter	CU935	Replaces standard filter Washable filter can be cleaned and replaced.	4 lbs
CU945WF		CU945		6 lbs

Standard Accessories – FFW Models:

ACCESSORY	DESCRIPTION
Built-In Thermostat	Built-in single stage thermostat with adjustable knob to have heater run until demand is satisfied.
Manual Reset	Manual Reset over temperature cutout wired into control circuit. Supplied in addition to auto-reset cutout.
Dead Front Disconnect Switch	A three pole non-fused disconnect switch disconnects power to the heater. Design prevents entry into the control compartment until disconnect switch is turned to the OFF position.
Fan/Heat High/Low Switch	Allows user to select whether the heater will run in low mode (2/3 output) or high (full output).
ON/OFF Switch	Allows the user to turn off the unit so it will not run during warm months or when not needed.

Standard Accessories – FFWD Models:

ACCESSORY	DESCRIPTION
SmartSeries® Plus	Built-in two stage thermostat runs 2/3 elements on stage 1 and full heat for stage 2. Fan cycles on high speed only. Comes with BACnet BMS compatibility, scheduling, cooling mode (Fan-Only), and keypad lock.
Manual Reset	Manual Reset over temperature cutout wired into control circuit. Supplied in addition to auto-reset cutout.
Dead Front Disconnect Switch	A three pole non-fused disconnect switch disconnects power to the heater. Design prevents entry into the control compartment until disconnect switch is turned to the OFF position.

MSPH SERIES
Plenum-Rated Unit Heater
Concealed Space Use — Zero Clearance



This zero-clearance, plenum-rated unit heater fits unobtrusively into **unique spaces** where you need freeze protection or extra comfort for occupants. It even connects to **existing ductwork**, making it easy to integrate with your building's environmental system.

Key Features:

Concealed Comfort
Address the warming needs of plenum spaces, drop ceilings and other concealed areas with this targeted unit heater. Its zero clearance design allows it to fit into spaces other heating solutions can't reach.

For Any Heating Job
These unit heaters deliver a wide range of output levels, and select models offer a two-speed fan for additional power and specific control of your output temperature.

Plenum-Rated Protection
Install this unit heater anywhere you have sensitive pipes, conduits or other equipment that might be vulnerable to freezing. It provides reliable output to keep your sensitive infrastructure running smoothly.

Technical Specifications:

Temp Range: 40°–90°F
CFM: 350–1000

Ideal Spaces:

Concealed Areas
Concession Stands
Bathrooms
Plenum Areas
Entrance Ways

Intertek

Beige

Dimensions and Clearances:

Small Cabinet

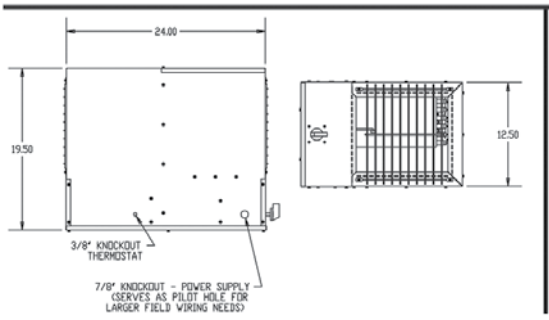

Large Cabinet

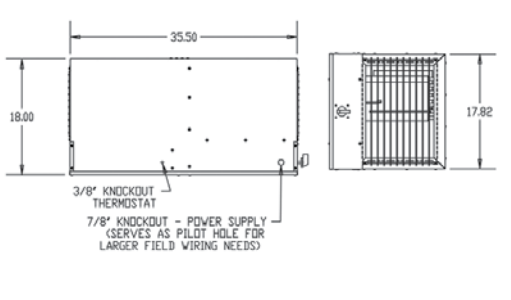

Scan the QR code to access additional specs and features.

Suggested Controls



Now compatible with SmartSeries Plus when used with 24VAC control transformer!

For more information visit MarleyMEP.com/Products/Unit-Garage-Heaters

QMARK A Marley Engineered Products Brand

rev: Aug 2026

MSPH SERIES
Plenum-Rated Unit Heater

Models & Specifications:

	ITEM INFORMATION		ELECTRICAL DATA				LOW SPEED		HIGH SPEED		DIMENSIONAL DATA	
	CATALOG NO.	UPC	PHASE	KW	VOLTS	AMPS	CFM	TEMP RISE	CFM	TEMP RISE	SHIP WT.	DIMENSIONS
◆	MSPH138124	685360149943	1	3	208	15.32	350	27°F	400	24°F	57	12 ½″ x 19 ½″ x 24″
◆	MSPH138324	685360149967	3	3	208	9.23	350	27°F	400	24°F	57	12 ½″ x 19 ½″ x 24″
◆	MSPH134324	685360150147	3	3	480	4.11	—	—	400	24°F	57	12 ½″ x 19 ½″ x 24″
◆	MSPH158124	685360150062	1	5	208	24.94	350	45°F	400	39°F	57	12 ½″ x 19 ½″ x 24″
◆	MSPH158324	685360150086	3	5	208	14.78	350	45°F	400	39°F	57	12 ½″ x 19 ½″ x 24″
●	MSPH132124	685360150109	1	3	240	13.4	350	27°F	400	24°F	57	12 ½″ x 19 ½″ x 24″
●	MSPH137124	685360150161	1	3	277	11.63	350	27°F	400	24°F	57	12 ½″ x 19 ½″ x 24″
●	MSPH132324	685360150123	3	3	240	8.12	350	27°F	400	24°F	57	12 ½″ x 19 ½″ x 24″
●	MSPH152124	685360149981	1	5	240	21.73	350	45°F	400	39°F	57	12 ½″ x 19 ½″ x 24″
●	MSPH157124	685360150048	1	5	277	18.85	350	45°F	400	39°F	57	12 ½″ x 19 ½″ x 24″
●	MSPH152324	685360150000	3	5	240	12.93	350	45°F	400	39°F	57	12 ½″ x 19 ½″ x 24″
●	MSPH154324	685360150024	3	5	480	6.51	—	—	400	39°F	57	12 ½″ x 19 ½″ x 24″
●	MSPH158124L	685360151045	1	5	208	24.94	850	20°F	1000	16°F	69	18″ x 18″ x 35 ½″
●	MSPH152124L	685360150963	1	5	240	21.73	850	20°F	1000	16°F	69	18″ x 18″ x 35 ½″
●	MSPH157124L	685360151021	1	5	277	18.85	850	20°F	1000	16°F	69	18″ x 18″ x 35 ½″
●	MSPH158324L	685360151069	3	5	208	14.78	850	20°F	1000	16°F	69	18″ x 18″ x 35 ½″
●	MSPH152324L	685360150987	3	5	240	12.93	850	20°F	1000	16°F	69	18″ x 18″ x 35 ½″
●	MSPH154324L	685360151007	3	5	480	6.51	—	—	1000	16°F	69	18″ x 18″ x 35 ½″
●	MSPH1758124	685360150260	1	7.5	208	38.12	850	28°F	1000	24°F	69	18″ x 18″ x 35 ½″
●	MSPH1752124	685360150185	1	7.5	240	33.31	850	28°F	1000	24°F	69	18″ x 18″ x 35 ½″
●	MSPH1757124	685360150246	1	7.5	277	28.91	850	28°F	1000	24°F	69	18″ x 18″ x 35 ½″
●	MSPH1758324	685360150284	3	7.5	208	22.88	850	28°F	1000	24°F	69	18″ x 18″ x 35 ½″
●	MSPH1752324	685360150208	3	7.5	240	20.1	850	28°F	1000	24°F	69	18″ x 18″ x 35 ½″
●	MSPH1754324	685360150222	3	7.5	480	10.16	—	—	1000	24°F	69	18″ x 18″ x 35 ½″
●	MSPH1102124	685360150307	1	10	240	43.73	850	37°F	1000	31°F	69	18″ x 18″ x 35 ½″
●	MSPH1107124	685360150369	1	10	277	37.93	850	37°F	1000	31°F	69	18″ x 18″ x 35 ½″
●	MSPH2102124	685360151083	1	10	240	43.73	850	37°F/20°F	1000	31°F/16°F	69	18″ x 18″ x 35 ½″
●	MSPH2107124	685360151144	1	10	277	37.93	850	37°F/20°F	1000	31°F/16°F	69	18″ x 18″ x 35 ½″
●	MSPH1108324	685360150383	3	10	208	29.82	850	37°F	1000	31°F	69	18″ x 18″ x 35 ½″
●	MSPH1102324	685360150321	3	10	240	26.12	850	37°F	1000	31°F	69	18″ x 18″ x 35 ½″
●	MSPH1104324	685360150345	3	10	480	13.17	—	—	1000	31°F	69	18″ x 18″ x 35 ½″
●	MSPH2108324	685360151168	3	10	208	29.82	850	37°F/20°F	1000	31°F/16°F	69	18″ x 18″ x 35 ½″
●	MSPH2102324	685360151106	3	10	240	26.12	850	37°F/20°F	1000	31°F/16°F	69	18″ x 18″ x 35 ½″
●	MSPH2104324	685360151120	3	10	480	13.17	—	—	1000	31°F/16°F	69	18″ x 18″ x 35 ½″
●	MSPH1158324	685360150444	3	15	208	43.9	850	56°F	1000	47°F	69	18″ x 18″ x 35 ½″
●	MSPH1152324	685360150406	3	15	240	38.14	850	56°F	1000	47°F	69	18″ x 18″ x 35 ½″
●	MSPH1154324	685360150420	3	15	480	19.18	—	—	1000	47°F	69	18″ x 18″ x 35 ½″
●	MSPH2152324	685360151182	3	15	240	38.14	850	56°F/28°F	1000	47°F/24°F	69	18″ x 18″ x 35 ½″
●	MSPH2154324	685360151205	3	15	480	19.18	—	—	1000	47°F/24°F	69	18″ x 18″ x 35 ½″

SKU Legend: ◆ **= Popular Products** ● **= Extended Offering** (Contact your local Marley Sales Representative for typically associated lead times)

NOTE: Total Amps including Resistive and Inductive loads.

**Low and High speed fan operation is determined during installation of thermostat set up † Tested @0.2″ S.P. ** Low speed fan operation not available on 480V models.

Optional Accessories:

CATALOG NO.	DESCRIPTION	OPENING	DIMENSIONS (W x H x D)	SHIP WT.
FRST10	Throw away filter, including rack for 3 & 5KW unit.	Inlet side	15″ x 20″ x 4 ½″	4 lbs
FRWS15	Reusable filter, including rack for 3 & 5KW unit.	Inlet side	15″ x 20″ x 4 ½″	4 lbs
FRLT20	Throw away filter, including rack for 7.5 to 15KW unit.	Inlet side	15″ x 20″ x 4 ½″	5 lbs
FRWL25	Reusable filter, including rack for 7.5 to 15KW unit.	Inlet side	15″ x 20″ x 4 ½″	5 lbs
LKS10	Adjustable louver kit for 3 & 5KW units	Outlet side	15″ x 20″ x 4 ½″	5 ½ lbs
LKL15	Adjustable louver kit for 7.5 to 15KW units	Outlet side	15″ x 20″ x 4 ½″	6 lbs
AES10	Aluminum Wall Louver kit for inside heated room for 3 & 5KW units	Inside room	Rough in: 13 ¹¹⁄₁₆″ x 13 ¾″	3 lbs
AESL15	Aluminum Wall Louver kit for inside heated room for 7.5 to 15KW units	Inside room	Rough in: 15 ¾″ x 15 ¾″	3 ½ lbs
PRHT1	Single Pole Field installed thermostat. Range 40° to 85°F	At heater	25A @ 240V resistive; 22A @ 277V	3 lbs

QMARK A Marley Engineered Products Brand

rev: Aug 2026

CHPR25 SERIES
Plenum-Rated Unit Heater
Concealed Space Use — Zero Clearance



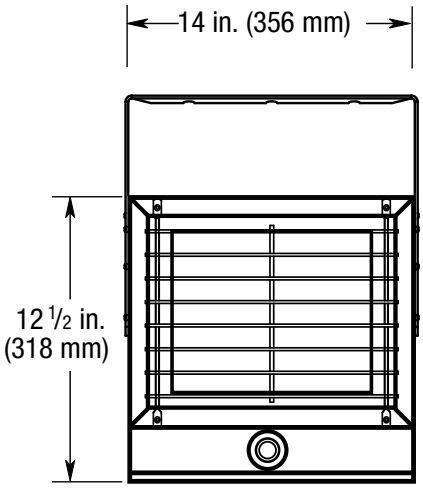

Concealed spaces can be tricky to heat. Choose plenum-rated unit heaters for just that purpose. They provide warmth and **freeze protection** in areas that are otherwise difficult to reach with your main heating solution.

Key Features:

Plenum-Rated Protection
Install this unit heater anywhere you have sensitive pipes, conduits or other equipment that might be vulnerable to freezing. It provides reliable output to keep your sensitive infrastructure running smoothly.

Concealed Comfort
Address the warming needs of plenum spaces, drop ceilings and other concealed areas with this targeted unit heater. Its zero clearance design allows it to fit into spaces other heating solutions can't reach.

Warm Air Only
This unit heater features a fan delay, allowing its heating element to warm up before it begins blowing air into the space.

One Connection
This unit heater is equipped for single-point field wiring, so you can easily install it, and easily disconnect from power when it's time to service it.

Technical Specifications:

Temp Range: 40°–90°F
CFM: 150

Ideal Spaces:

Between Finished Ceiling & Drop Ceiling

Plenum Areas
Freeze Protection

Intertek

Beige

Models & Specifications:

ITEM INFORMATION			ELECTRICAL DATA								
	CATALOG NO.	UPC	VOLTS	kW	AMPS	PHASE	HZ	BTU/HR.	FPM	RISE	SHIP WT.
◆	CHPR25	685360149547	240	2.5	10.7	1	60	8530	1880	60° F	26 lbs
			208	1.9	9.42		60	6398		46° F	

SKU Legend: ◆ **= Popular Products** ● **= Extended Offering** (Contact your local Marley Sales Representative for typically associated lead times)

Optional Accessories:

CATALOG NO.	UPC	DESCRIPTION	SHIP WT.
AFL240	685360153476	Thermal Limit Alarm	1 lbs

Scan the QR code to access additional specs and features.

For more information visit MarleyMEP.com/Products/Unit-Garage-Heaters

QMARK A Marley Engineered Products Brand

rev: Aug 2026

Baseboard heaters provide simplistic comfort

The versatility of baseboard heaters make them an excellent choice for a variety of residential and commercial applications, where quiet, soft heat is desired.

EVERY-DAY VALUE

Simple, Low Cost
Instant Heat
UL Listed for Floor & Wall Mount



2500 Series Electric Baseboards

COST AND SIMPLICITY

PROFESSIONAL VALUE

Good Feature Set
Heavy Gauge Construction



QMKC Commercial Baseboards

COMMERCIAL GRADE CONSTRUCTION

AESTHETIC & COMFORT VALUE

Maximum Comfort
Welded Safety Grill
Gentle & Sustained Heat Transfer



HBB Hydronic Baseboards

PERFORMANCE AND SAFETY



Reliable baseboard heaters are strong enough to be used for primary heating and versatile enough to provide supplemental warmth for cold spots and hard-to-reach areas.

HBB SERIES
Electric Hydronic Baseboard Heater



The heater **keeps on radiating warmth**, even after the thermostat shuts off, due to its fluid-immersed, sealed heating element. Its **low-profile design** makes it a perfect fit for bedrooms, bathrooms, living rooms and dens.

Key Features:

Fewer Allergens in the Air
Heat your space without kicking up dust or other allergens. The natural convection airflow doesn't rely on a blower or fan to move warm air throughout the room

Stable, Gentle Heat
Hydronic baseboards put out smooth, steady warmth without large temperature swings. Their sealed-tube heating element heats up quickly and stays that way for a more stable room climate.

Continuous Comfort
Even after the thermostat turns off, this unit continues heating the room, thanks to its fluid-immersed heating element that better retains warmth to keep your room cozy for longer.

Superior Safety
Heavy-duty welded steel louvered grille discourages insertion of foreign objects and low surface temperatures make it safe for installation around pets and children.

Versatile Installation
Built-in wireway, lead wires, and knockouts allow for quick field connection from either end, whether surface mounted on a wall or flat on the floor.

Ideal Spaces:

Bedrooms
Living/Family Room
Basements
Offices
Conference Rooms
Waiting Rooms
Entrance Ways

c UL US

Beige

Scan the QR code to access additional specs and features.

For more information visit MarleyMEP.com/Products/Baseboard-Heaters

rev: Aug 2026

HBB SERIES
Electric Hydronic Baseboard Heater

Models & Specifications:

	ITEM INFORMATION		ELECTRICAL DATA			DIMENSIONAL DATA	
	CATALOG NO.	UPC	VOLTS	WATTS	AMPS	LENGTH	SHIP WT.
◆	HBB504	68536035789	240/208	500/375	2.1/1.8	28″	10 lbs
◆	HBB754	68536035826	240/208	750/563	3.1/2.7	34″	12 lbs
◆	HBB1004	68536035635	240/208	1000/750	4.2/3.6	46″	15 lbs
◆	HBB1254	68536035673	240/208	1250/938	5.2/4.5	58″	19 lbs
◆	HBB1504	68536035710	240/208	1500/1125	6.3/5.8	70″	22 lbs
◆	HBB2004	68536035741	240/208	2000/1500	8.3/7.2	94″	30 lbs
●	HBB500	68536035772	120	500	4.2	28″	10 lbs
●	HBB508	68536035802	208	500	2.4	28″	10 lbs
●	HBB750	68536035819	120	750	6.3	34″	12 lbs
●	HBB758	68536035840	208	750	3.6	34″	12 lbs
●	HBB1000	68536035628	120	1000	8.3	46″	15 lbs
●	HBB1008	68536035659	208	1000	4.8	46″	15 lbs
●	HBB1250	68536035666	120	1250	10.4	58″	19 lbs
●	HBB1258	68536035697	208	1250	6	58″	19 lbs
●	HBB1500	68536035703	120	1500	12.5	70″	22 lbs
●	HBB1508	68536035734	208	1500	7.2	70″	22 lbs
●	HBB2008	68536035765	208	2000	9.6	94″	30 lbs

SKU Legend: ◆ **= Popular Products** ● **= Extended Offering** (Contact your local Marley Sales Representative for typically associated lead times)

Optional Accessories:

CATALOG NO.	UPC	DESCRIPTION	SHIP WT.*
HBBT1	685360035574	25 amp @ 120-277 VAC; Single-Pole Thermostat Snap-Action Type; Field-Installed in Junction Box	1 lbs
HBBT2	685360035598	25 amp @ 120-277 VAC; Double-Pole Thermostat Snap-Action Type; Field-Installed in Junction Box	1 lbs
HBBT1TP	685360035581	Same as Model HBBT1 except Tamper-Resistant	1 lbs
HBBT2TP	685360035604	Same as Model HBBT2 except Tamper-Resistant	1 lbs
HBBAC*	685360035383	Air Conditioner Outlet Section, 20 amps @ 208/240 VAC	2 lbs
HBBDR	685360035420	Duplex Receptacle Section, 15 amps @ 120 VAC	2 lbs
HBBDSDR120	685360147970	Double-Pole Disconnect Switch /120V Receptacle	3 lbs
HBBWS	685360035611	8 in. Blank Wiring Section	1 lbs
HBBLVR0*	685360035475	Low Voltage Relay Control Section, 22 amps @ 120 VAC	3 lbs
HBBLVR8*	685360035505	Low Voltage Relay Control Section, 22 amps @ 208 VAC	3 lbs
HBBLVR4*	685360035482	Low Voltage Relay Control Section, 22 amps @ 240 VAC	3 lbs
HBBCDS2	685360035390	Double-Pole Power On/Off Switch Section	2 lbs
CBDCIC*	685360014609	Inside Corner	1 lbs
CBDCOC*	685360014616	Outside Corner	1 lbs

*HBBAC - HBBDR - HBBLVR - HBBWS accessories add 8 in. to baseboard length.



HBBT1 & HBBT2



HBB1TP & HBB2TP



*HBBAC

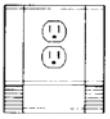

*HBBDR



*HBBLVR

*Add 8″ to length of installation

Dimensions and Clearances:

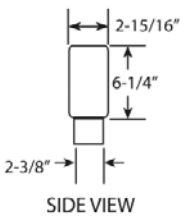

SIDE VIEW

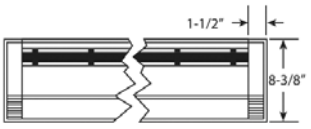

Length varies with model.
See selection chart.

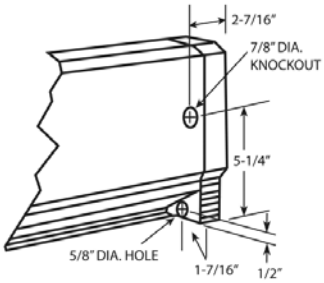

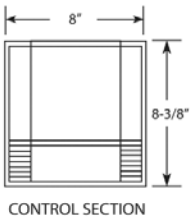

CONTROL SECTION

For more information visit MarleyMEP.com/Products/Baseboard-Heaters

rev: Aug 2026

2500 SERIES
Electric Baseboard Heater



For **quiet**, comfortable heating, choose these baseboard heaters. These **fan-free heating** units deliver warmth and comfort in a **low-profile housing** that's safe to install on the wall or directly on carpet, tile or other flooring.

Key Features:

Fast-Acting Warmth
Convection heats the room rapidly, without uneven hot and cold zones, providing comfort from floor to ceiling.

Fewer Allergens in the Air
Heat your space without kicking up dust or other allergens. The natural convection airflow doesn't rely on a blower or fan to move warm air throughout the room.

Installs Quickly and Easily
Wire up and connect this baseboard quickly and easily with its large wiring compartment, dual knockouts and built-in cable clamp.

Optimum Efficiency
For maximum efficiency, the unit converts all incoming electric energy into heat, according to Department of Energy standards.

Safe Operation
For worry-free warmth, these UL Listed baseboard heaters offer an overheat protection feature that prevents the unit from running when its air intake is blocked.

Ideal Spaces:

Bedrooms
Living/Family Room
Kitchens
Basements
Offices
Conference Rooms
Lobbies
Waiting Rooms
Bathrooms

White Beige

Scan the QR code to access additional specs and features.

For more information visit MarleyMEP.com/Products/Baseboard-Heaters

rev: Aug 2026

2500 SERIES
Electric Baseboard Heater

Models & Specifications:

	ITEM INFORMATION		ELECTRICAL DATA			DIMENSIONAL DATA	
	CATALOG NO.	UPC	VOLTS	WATTS	AMPS	LENGTH	SHIP WT.
◆	2512NW	098319730008	120	400	3.4	24″	5.2 lbs
◆	2542NW	098319730022	240/208	400/300	1.7/1.5	24″	5.2 lbs
◆	2513NW	098319730084	120	750	6.3	36″	7.5 lbs
◆	2543NW	098319730107	240/208	750/564	3.2/2.8	36″	7.5 lbs
◆	2514NW	098319730121	120	1000	8.4	48″	10 lbs
◆	2544NW	098319730145	240/208	1000/752	4.2/3.7	48″	10 lbs
◆	2574NW	098319730152	277/240/208	1000/752/564	3.7/3.2/2.8	48″	10 lbs
◆	2545NW	098319730183	240/208	1250/940	5.2/4.6	60″	11.5 lbs
◆	2516NW	098319730206	120	1500	12.6	72″	14 lbs
◆	2546NW	098319730220	240/208	1500/1128	6.3/5.5	72″	14 lbs
◆	2576NW	098319730237	277/240/208	1500/1128/846	5.5/4.7/4.1	72″	14 lbs
◆	2548NW	098319730251	240/208	2000/1504	8.4/7.3	96″	18.5 lbs
●	2502NW	098319730015	208	400	2	24″	5.2 lbs
●	2572NW	098319730039	277/240/208	400/300/225	1.5/1.3/1.1	24″	5.2 lbs
●	25126NW	098319730046	120	500	4.2	30″	6.3 lbs
●	25026NW	098319730053	208	500	2.4	30″	6.3 lbs
●	25426NW	098319730060	240/208	500/376	2.1/1.9	30″	6.3 lbs
●	25726NW	098319730077	277/240/208	500/376/282	1.8/1.6/1.4	30″	6.3 lbs
●	2503NW	098319730091	208	750	3.6	36″	7.5 lbs
●	2573NW	098319730114	277/240/208	750/564/423	2.7/2.4/2.1	36″	7.5 lbs
●	2504NW	098319730138	208	1000	4.8	48″	10 lbs
●	2515NW	098319730169	120	1250	10.5	60″	11.5 lbs
●	2505NW	098319730176	208	1250	6	60″	11.5 lbs
●	2575NW	098319730190	277/240/208	1250/940/705	4.6/4.0/3.4	60″	11.5 lbs
●	2506NW	098319730021	208	1500	7.3	72″	14 lbs
●	25008NW	098319729811	208	2500	12	96″	18.5 lbs
●	2508NW	098319730244	208	2000	9.7	96″	18.5 lbs
●	25408NW	098319729828	240/208	2500/1880	10.5/9.1	96″	18.5 lbs
●	2578NW	098319730268	277/240/208	2000/1504/1128	7.3/6.3/5.5	96″	18.5 lbs
●	25708NW	098319729835	277/240/208	2500/1880/1410	9.1/7.9/6.8	96″	18.5 lbs

SKU Legend: ◆ **= Popular Products** ● **= Extended Offering** (Contact your local Marley Sales Representative for typically associated lead times)

NOTE: Unit and accessories represent White finish. For Beige, remove N suffx to catalog number (ex. 2544W). Availability for the Beige skus is the exact same as it is for the White sku (ex. 25708W = Extending offering) For high-altitude baseboard heater (mounted above 7,500 ft.), add suffx "H" to catalog number. 8 ft. length baseboards must be ordered in multiples of two pieces for shipment.

Dimensions and Clearances:

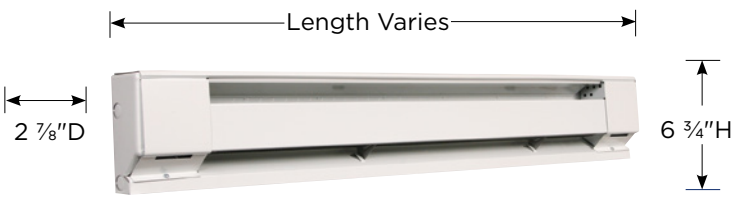

Suggested Controls



TH114A240DBA



MS26 or M601W

For more information visit MarleyMEP.com/Products/Baseboard-Heaters

rev: Aug 2026

2500 SERIES
Electric Baseboard Heater

Filler Sections:

CATALOG NO.	UPC	DESCRIPTION	SHIP WT.
FS12NW	685360185989	1 ft. Filler Section	2 lbs
FS24NW	685360010960	2 ft. Filler Section	4 lbs
FS36NW	685360010984	3 ft. Filler Section	6 lbs
FS48NW	685360061702	4 ft. Filler Section	8 lbs
FSJ2NW	685360010922	2 in. Joiner Strip	0.5 lbs

Blank Sections:

CATALOG NO.	UPC	DESCRIPTION	SHIP WT.
QMKCBDA2NW	685360059594	2.6 ft. Blank Section, Beige	4 lbs
QMKCBDA3NW	685360059617	3 ft. Blank Section, Beige	5 lbs
QMKCBDA4NW	685360059631	4 ft. Blank Section, Beige	7 lbs
QMKCBDA5NW	685360059655	5 ft. Blank Section, Beige	9 lbs
QMKCBDA6NW	685360059679	6 ft. Blank Section, Beige	11 lbs
OMKCBDABNW	685360059693	8 ft. Blank Section, Beige	14 lbs

Optional Controls & Accessories:

CATALOG NO.	UPC	DESCRIPTION	SHIP WT.
TA1ANW	098319730411	SP Thermostat, rated 22A @ 120–277V	1 lbs
TA1TPANW	098319730428	Tamper-Resistant Version of TA1AW	1 lbs
TA2ANW	098319730435	DP Thermostat, rated 22A @ 120–277V	1 lbs
TA2TPANW	098319730442	Tamper-Resistant Version of TA2AW	1 lbs
HCA2415/20NW	098319730466	240V Load Transfer Switch, 20A	1 lbs
HCA1215/20NW	098319730459	120V Load Transfer Switch, 20A	1 lbs
RSA1224	098319714800	120V/24V Transformer Relay, 22A	1 lbs
RSA2024	098319714855	208V/24V Transformer Relay, 22A	1 lbs
RSA2424	098319714909	240V/24V Transformer Relay, 22A	1 lbs
RSA2724	098319714954	277V/24V Transformer Relay, 19A	1 lbs
RA1NW	098319730473	120V Duplex Receptacle	1 lbs
DSW2NW	098319730497	Double-Pole Power On/Off Switch rated 20A @ 120–277V	1 lbs
PR24	098319713674	Single-Pole Power Relay, 24VControl rated 30A @ 120–240V, 23A @ 277V	1 lbs
PR120	098319713681	Same as PR24 except with 120V Control	1 lbs
ICANW	098319730503	Inside Corner	1 lbs
RA1COMPNW	098319730480	Duplex Receptacle Cover only — carton of 10	1 lbs

NOTE: Unit and accessories represent White finish. For Beige, remove N suffix to catalog number (ex. 2544W)

WHERE DESIGN AND COMFORT MEET

THX zero vertical profile eliminates visual disruptions while preserving the building's heat envelope and amplifying building aesthetics. Maximize building comfort and reclaim floor space with the most compact, in-floor convector on the market today.

Brought to you by Marley Engineered Products—a trusted leader in comfort solutions—THX is designed with durability in mind to withstand daily cleaning, water and debris.

THX

THE OUT-OF-SIGHT, OUT-OF-MIND UL LISTED **IN-FLOOR PERIMETER HEATER**



Learn more about this revolutionary convector in our digital catalog

Find out how you can incorporate THX into your next supplemental heating spec.
Visit **CustomHeatSolutions.com/THX-Trench-Heater** or contact your QMark representative.

QMKC SERIES
Commercial Baseboard Heater



Commercial baseboard heaters provide comfort with **no need for a fan or blower**. Their durable design allows for safe, reliable operation in **high-traffic areas** like hallways, lobbies and waiting rooms.

Key Features:

Fast-Acting Warmth
Convection heats the room rapidly, without uneven hot and cold zones, providing comfort from floor to ceiling.

Fewer Allergens in the Air
Heat your space without kicking up dust or other allergens. The radiant airflow doesn't rely on a blower or fan to move warm air throughout the room.

Durable Design
Add heat and comfort to high-traffic hallways and lobbies. The unit's commercial-grade cold-rolled steel cover and bracket protect the heating mechanism from damage.

Installs Quickly and Easily
Wire up and connect this baseboard quickly and easily with its large wiring compartment, dual knockouts and built-in cable clamp.

Optimum Efficiency
For maximum efficiency, the unit converts all incoming electric energy into heat, according to Department of Energy standards.

Ideal Spaces:

Bedrooms
Living/Family Room
Kitchens
Bathrooms
Basements
Offices
Conference Rooms
Hallways
Waiting Rooms

c UL US

Beige

Dimensions and Clearances:



Scan the QR code to access additional specs and features.

For more information visit MarleyMEP.com/Products/Baseboard-Heaters

rev: Aug 2026

QMKC SERIES
Commercial Baseboard Heater

Models & Specifications:

	ITEM INFORMATION		ELECTRICAL DATA			DIMENSIONAL DATA	
	CATALOG NO.	UPC	VOLTS	WATTS	AMPS	LENGTH	SHIP WT.
●	QMKC25126W	685360060460	120	500	4.2	30″	7 ⅘ lbs
●	QMKC25026W	685360060163	208	500	2.4		
●	QMKC25426W	685360060873	240/208	500/376	2.1/1.8		
●	QMKC25726W	685360061320	277/240/208	500/376/282	1.8/1.6/1.4		
●	QMKC2513W	685360060514	120	750	6.5	36″	9 lbs
●	QMKC2503W	685360060217	208	750	3.6		
●	QMKC2543W	685360060927	240/208	750/564	3.1/2.7		
●	QMKC2573W	685360061375	277/240/208	750/564/423	2.7/2.4/2.0		
●	QMKC2514W	685360060569	120	1000	8.3	48″	11 ½ lbs
●	QMKC2504W	685360060262	208	1000	4.8		
●	QMKC2544W	685360060972	240/208	1000/752	4.2/3.6		
●	QMKC2574W	685360061429	277/240/208	1000/752/564	3.6/3.1/2.7		
●	QMKC2515W	685360060613	120	1250	10.4	60″	13 lbs
●	QMKC2505W	685360060316	208	1250	6.0		
●	QMKC2545W	685360061023	240/208	1250/940	5.2/4.5		
●	QMKC2575W	685360061474	277/240/208	1250/940/705	4.5/3.9/3.4		
●	QMKC2516W	685360060668	120	1500	12.6	72″	15 ½ lbs
●	QMKC2506W	685360060361	208	1500	7.2		
●	QMKC2546W	685360061078	240/208	1500/1128	6.3/5.4		
●	QMKC2576W	685360061528	277/240/208	1500/1128/846	5.4/4.7/4.1		
●	QMKC2508W	685360060415	208	2000	9.6	96″	20 lbs
●	QMKC2548W	685360061122	240/208	2000/1504	8.3/7.2		
●	QMKC2578W	685360061573	277/240/208	2000/1504/1128	7.2/6.3/5.4		
●	QMKC25008W	685360060118	208	2500	12.0	96″	20 lbs
●	QMKC25408W	685360060828	240/208	2500/1880	10.4/8.7		
●	QMKC25708W	685360061276	277/240/208	2500/1880/1410	9.0/7.5/6.8		

SKU Legend: ◆ **= Popular Products** ● **= Extended Offering** (Contact your local Marley Sales Representative for typically associated lead times)

Filler Sections:

CATALOG NO.	UPC	DESCRIPTION	SHIP WT.
FS12	098319731500	1 ft. Filler Section	2 lbs
FS24	098319731517	2 ft. Filler Section	4 lbs
FS36	098319731524	3 ft. Filler Section	6 lbs
FS48	098319731531	4 ft. Filler Section	8 lbs
FSJ2	098319731548	2 in. Joiner Strip	½ lbs

Blank Sections:

CATALOG NO.	UPC	DESCRIPTION	SHIP WT.
QMKCBDA2W	685360059594	2 ⅗ ft. Blank Section	4 lbs
QMKCBDA3W	685360059617	3 ft. Blank Section	5 lbs
QMKCBDA4W	685360059631	4 ft. Blank Section	7 lbs
QMKCBDA5W	685360059655	5 ft. Blank Section	9 lbs
QMKCBDA6W	685360059679	6 ft. Blank Section	11 lbs
QMKCBDA8W	685360059693	8 ft. Blank Section	14 lbs

Optional Controls & Accessories:

CATALOG NO.	UPC	DESCRIPTION	SHIP WT.
TA1AW	098319730411	SP Thermostat, rated 22A @ 120–277V	1 lbs
TA1TPAW	685360185996	Tamper-Resistant Version of TA1AW	1 lbs
TA2AW	685360186009	DP Thermostat, rated 22A @ 120–277V	1 lbs
TA2TPAW	098319730442	Tamper-Resistant Version of TA2AW	1 lbs
HCA2415/20W	098319730466	240V Load Transfer Switch, 20A	1 lbs
HCA1215/20W	098319730459	120V Load Transfer Switch, 20A	1 lbs
RSA1224	098319714800	120V/24V Transformer Relay, 22A	1 lbs
RSA2024	098319714855	208V/24V Transformer Relay, 22A	1 lbs
RSA2424	098319714909	240V/24V Transformer Relay, 22A	1 lbs
RSA2724	098319714954	277V/24V Transformer Relay, 19A	1 lbs
RA1W	098319730473	120V Duplex Receptacle	1 lbs
DSW2W	685360165066	Double-Pole Power On/Off Switch rated 20A @ 120–277V	1 lbs
PR24	098319713674	Single-Pole Power Relay, 24VControl rated 30A @ 120–240V, 23A @ 277V	1 lbs
PR120	098319713681	Same as PR24 except with 120V Control	1 lbs
ICANW	685360011097	Inside Corner	1 lbs
RA1COMPW	098319730480	Duplex Receptacle Cover only — carton of 10	1 lbs

NOTE: For high-altitude baseboard heater (mounted above 7,500 ft.), add suffix "H" to catalog number. 8 ft. length baseboards must be ordered in multiples of two pieces for shipment.

Suggested Controls



TH114A240DBA



MS26 or M601W

For more information visit MarleyMEP.com/Products/Baseboard-Heaters

rev: Aug 2026

A blanket of warmth for hard-to-heat areas

Radiant technology works like the sun's rays to put warmth right where you need it — without having to heat (or pay for heating) the surrounding air.

Customizations AVAILABLE!*



Transit Station | Stadium | Loading Dock | Open-Air Dining | Entryway | Offices & Basements

Why Radiant Heating

SAVE ON ENERGY & MAINTENANCE COSTS

By transferring warmth directly, radiant heaters don't waste energy heating the surrounding air. With no filters or moving parts to maintain, they are less costly to service as well.

HEAT WHERE AND WHEN YOU NEED IT

As a direct heat source, radiant output is unaffected by wind and rain. QMark radiant heaters can be used for everything from snow removal to cozying up counter and desk areas.

CLEANER ALTERNATIVE TO GAS HEATING

QMark radiant heaters can be installed in tight spaces with little to no clearance. There's no need for ducting or exhaust, so these heaters operate cleanly without circulating dust or fumes.

Versatile, Superior Value Both Indoors and Outdoors

Instant & Targeted Heat: Infrared energy delivers direct, uniform and localized heat — heating people and objects rather than the air, just like the sun.

Clean & Safe Heat: No fumes, odors or combustion. Does not circulate dust or other irritants and allergens.

Energy Efficient: Optimized shortwave infrared energy delivers continuous comfort efficiently without energy waste due to the wind and heating of the surrounding air.

Easy to Install: No need for gas lines, ducting or venting. Install in compact spaces.

Low Maintenance: No filters or moving parts to service.

Money Savings: Minimal upfront costs due to material and labor. Minimal energy usage and no need to purchase propane or other fuels to maintain operation.

*Customizations not available for all products.

CP SERIES
Radiant Ceiling Panel



Radiant ceiling panels go where other comfort solutions can't. With three mounting options, they can **fit any ceiling space**, helping to offset heat loss through perimeter windows and entrances. Install them in your bathroom, office or studio—anywhere you need to keep warm and **conserve floor space** for activities.

Key Features:

The Clear Choice

Keep floor and wall space free for use with radiant ceiling panels. They are compatible with almost any ceiling type and make a welcome addition to any cold room.

Save Money and Energy

By offsetting heat loss efficiently, radiant ceiling panels are able to keep you comfortable without overtaxing your main HVAC system or your energy budget.

Easy Operation

Radiant ceiling panels put out heat with no moving parts. This makes them quieter to operate and also lowers their maintenance cost.

Preserve Your Heating Envelope

Radiant ceiling panels provide clean, gentle, comfortable heat. This makes them a perfect choice for offsetting heat loss in drafty spaces and rooms with large windows.

Keep Clear

With no fan or exhaust, radiant ceiling panels heat without drying out room air. This also reduces the need to clear settled dust and particles from your ceilings, walls and drapes.

Scan the QR code to access additional specs and features.

Technical Specifications:

Dimensions: 2′x2′ 2′x4′ and Custom Sizing Available

Ideal Spaces:

Living/Family Room
Offices & Retail Spaces
Hallways & Lobbies
Conference Rooms
Locker Rooms & Bathrooms
Laboratories
Yoga Studios
Bedrooms
Basements

c UL us

White

Custom Colors and Silkscreens Available

For more information visit MarleyMEP.com/Products/Radiant-Heaters

QMARK A Marley Engineered Products Brand

rev: Aug 2026

CP SERIES
Radiant Ceiling Panel

Models & Specifications:

	ITEM INFORMATION		ELECTRICAL DATA				DIMENSIONAL DATA	
	CATALOG NO.	UPC	VOLTS	WATTS	BTU/HR.	AMPS	SIZE	SHIP WT.
◆	CP371F	685360168821	120	375	1280	3.1	2′ x 2′	15 lbs
◆	CP378F	685360168838	208	375	1280	1.8	2′ x 2′	15 lbs
◆	CP372F	685360168845	240	375	1280	1.6	2′ x 2′	15 lbs
◆	CP501F	685360168869	120	500	1706	4.2	2′ x 4′	28 lbs
◆	CP508F	685360168876	208	500	1706	2.4	2′ x 4′	28 lbs
◆	CP502F	685360168883	240	500	1706	2.1	2′ x 4′	28 lbs
◆	CP621F	685360168913	120	625	2133	5.2	2′ x 4′	28 lbs
◆	CP628F	685360168920	208	625	2133	3.0	2′ x 4′	28 lbs
◆	CP622F	685360168937	240	625	2133	2.6	2′ x 4′	28 lbs
◆	CP751F	685360168968	120	750	2559	6.3	2′ x 4′	28 lbs
◆	CP758F	685360168975	208	750	2559	3.6	2′ x 4′	28 lbs
◆	CP752F	685360168982	240	750	2559	3.1	2′ x 4′	28 lbs
●	CP251F	685360168739	120	250	853	2.1	2′ x 2′	15 lbs
●	CP258F	685360168746	208	250	853	1.2	2′ x 2′	15 lbs
●	CP252F	685360168753	240	250	853	1.0	2′ x 2′	15 lbs
●	CP257F	685360168760	277	250	853	0.9	2′ x 2′	15 lbs
●	CP311F	685360168784	120	310	1058	2.6	2′ x 2′	15 lbs
●	CP318F	685360168791	208	310	1058	1.5	2′ x 2′	15 lbs
●	CP312F	685360169019	240	310	1058	1.3	2′ x 2′	15 lbs
●	CP317F	685360168807	277	310	1058	1.1	2′ x 2′	15 lbs
●	CP377F	685360169026	277	375	1280	1.4	2′ x 2′	15 lbs
●	CP507F	685360168890	277	500	1706	1.8	2′ x 4′	28 lbs
●	CP627F	685360168944	277	625	2133	2.3	2′ x 4′	28 lbs
●	CP757F	685360168999	277	750	2559	2.7	2′ x 4′	28 lbs
●	CP253F	685360168777	347	250	853	0.7	2′ x 2′	15 lbs
●	CP313F	685360168814	347	310	1058	0.9	2′ x 2′	15 lbs
●	CP373F	685360168852	347	375	1280	1.1	2′ x 2′	15 lbs
●	CP503F	685360168906	347	500	1706	1.4	2′ x 4′	28 lbs
●	CP623F	685360168951	347	625	2133	1.8	2′ x 4′	28 lbs
●	CP753F	685360169002	347	750	2559	2.1	2′ x 4′	28 lbs

SKU Legend: ◆ **= Popular Products** ● **= Extended Offering** (Contact your local Marley Sales Representative for typically associated lead times)

NOTE: When ordering panels with custom features, the catalog number will change. Please see next page for more information on made to order custom products.

Optional Mounting Accessories:

CATALOG NO.	UPC	DESCRIPTION
QSF2424	685360065267	Surface Mounting Frame for 24" x 24" Panels
QSF2448	685360065274	Surface Mounting Frame for 24" x 48" Panels
QRF2424	685360065090	Recess Mounting Frame for 24" x 24" Panels
QRF2448	685360065106	Recess Mounting Frame for 24" x 48" Panels

NOTE: Heating panels do not have a fire or hazardous rating, but construction is of fire retardant materials. Panels normally are treated like light fixtures. If necessary, acoustical tile can be placed on top of the panels.

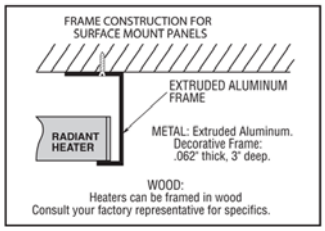

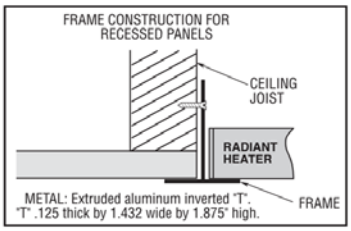

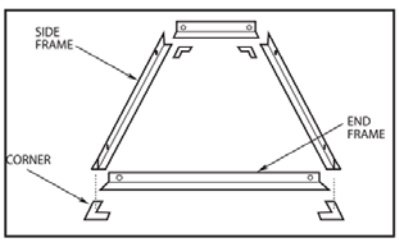

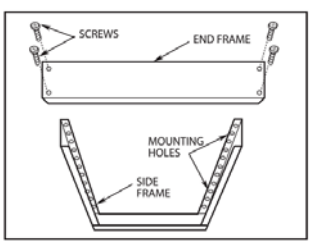

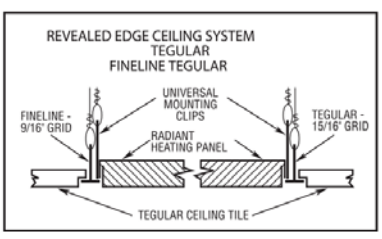

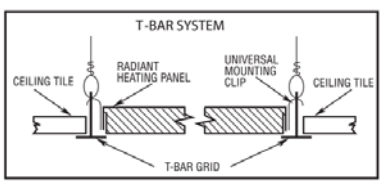

NOTE: Heating panels do not have a fire or hazardous rating, but construction is of fire retardant materials. Panels normally are treated like light fixtures. If necessary, acoustical tile can be placed on top of the panels.

QMARK A Marley Engineered Products Brand

rev: Aug 2026

RCC SERIES
Cove Heater



For gentle heating in spaces **where wall space is at a premium**, select a cove heater. It **mounts easily** on the wall, providing warmth for your living room, bedroom, bathroom, basement or office.

Key Features:

Fanless Operation

This cove heater's radiant design allows it to warm the room without the use of a fan, for less noise and circulation of particles in the air.

Easy to Maintain

The lack of moving parts means this unit can function well over the long term without the wear and tear associated with motors and fans that break down over time.

Uniform Comfort

With an aluminum front panel coated with high temperature textured paint, this cove heater focuses on radiating as much heat energy as possible into the room.

Out of Reach

The cove heater is ideal for those spaces where occupant safety is top of mind and quiet operation is desired. Installed high up on the wall and out of reach of occupants, the cove heater delivers clean, gentle comfort to the space.

Technical Specifications:

Length: 34"–132"
Output: 450–1800 watts

Ideal Spaces:

Offices & Retail Spaces
Hallways & Lobbies
Conference Rooms
Day Care Centers
Geriatric Facilities
Laboratories
Living Room & Kitchens
Bathrooms
Basements

c UL US

Textured White

Scan the QR code to access additional specs and features.

QMARK A Marley Engineered Products Brand
rev: Aug 2026

RCC SERIES
Cove Heater

Models & Specifications:

	ITEM INFORMATION		ELECTRICAL DATA				DIMENSIONAL DATA	
	CATALOG NO.	UPC	VOLTS	WATTS	BTU/HR.	AMPS	LENGTH	SHIP WT.
◆	RCC4524C	685360147192	240	450	1536	2.2	34″	4 lbs
◆	RCC6024C	685360147222	240	600	2048	2.5	47″	6 lbs
◆	RCC7524C	685360147260	240	750	2560	3.1	59″	7 lbs
◆	RCC9024C	685360147307	240	900	3072	3.7	71″	8 lbs
◆	RCC10524C	685360147451	240	1050	3583	4.4	83″	9 lbs
◆	RCC12024C	685360147376	240	1200	4095	5.0	94″	10 lbs
◆	RCC15024C	685360147406	240	1500	5120	6.2	118″	13 lbs
◆	RCC18008C	685360147420	208	1800	6142	8.7	132″	15 lbs
●	RCC4512C	685360147185	120	450	1536	2.2	34″	4 lbs
●	RCC4508C	685360147178	208	450	1536	2.2	34″	4 lbs
●	RCC6012C	685360147215	120	600	2048	5.0	47″	6 lbs
●	RCC6008C	685360147208	208	600	2048	2.9	47″	6 lbs
●	RCC6027C	685360147239	277	600	2048	2.2	47″	6 lbs
●	RCC7512C	685360147253	120	750	2560	6.2	59″	7 lbs
●	RCC7508C	685360147246	208	750	2560	3.6	59″	7 lbs
●	RCC7527C	685360147277	277	750	2560	2.7	59″	7 lbs
●	RCC9012C	685360147291	120	900	3072	7.5	71″	8 lbs
●	RCC9008C	685360147284	208	900	3072	4.3	71″	8 lbs
●	RCC9027C	685360147314	277	900	3072	3.2	71″	8 lbs
●	RCC10512C	685360147338	120	1050	3583	8.8	83″	9 lbs
●	RCC10508C	685360147321	208	1050	3583	5.0	83″	9 lbs
●	RCC10527C	685360147345	277	1050	3583	3.8	83″	9 lbs
●	RCC12012C	685360147369	120	1200	4095	10.0	94″	10 lbs
●	RCC12008C	685360147352	208	1200	4095	5.8	94″	10 lbs
●	RCC12027C	685360147383	277	1200	4095	4.3	94″	10 lbs
●	RCC15008C	685360147390	208	1500	5120	7.2	118″	13 lbs
●	RCC15027C	685360147413	277	1500	5120	5.4	118″	13 lbs
●	RCC18024C	685360147437	240	1800	6142	7.5	132″	15 lbs
●	RCC18027C	685360147444	277	1800	6142	6.5	132″	15 lbs

SKU Legend: ◆ **= Popular Products** ● **= Extended Offering** (Contact your local Marley Sales Representative for typically associated lead times)

Optional Accessories:

CATALOG NO.	UPC	DESCRIPTION	SHIP WT.
RCCT	685360065663	Integral Thermostat: Range 45–90°F with Positive Off	1 lbs
RCCSPC	685360147666	Splice Plate Assembly	2 lbs

Dimensions and Clearances:

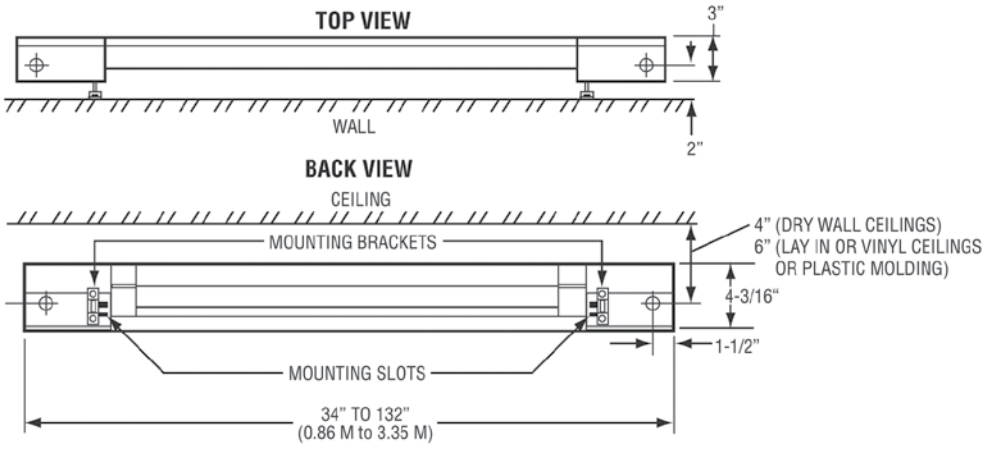

QMARK A Marley Engineered Products Brand
rev: Aug 2026

INFRARED HEATERS
Introduction

Infrared technology permits the heating of areas where it is impractical, either economically or physically, to heat air. The physics that causes warm air to rise and cool air to fall are constantly working against forced air heating systems, particularly in outdoor or high ceiling areas. The radiant heat energy emitted by infrared heaters is transferred direct to the people and objects under them. It is the same principle that allows the sun to make a clear, cold day feel warm. The radiant energy from infrared heaters can be directed and focused in any direction to evenly blanket people and equipment with comforting warmth, free from drafts and noisy fans or blowers.

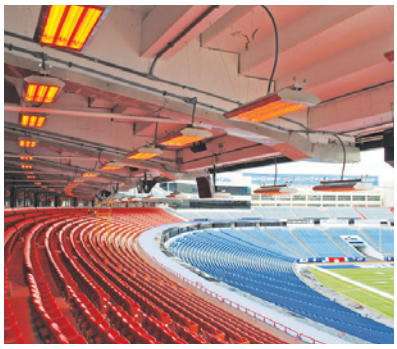







Selecting the Right Models

Keep in mind these elements when selecting the correct infrared heater for your needs. **Consult your MEP sales representative for additional design assistance**.

1. **Type of application**: area heating, snow melting, or spot heating
2. **Type of environment**: outdoors, indoors, marine or corrosive atmospheres
3. **Design area**: square footage, objects/people standing or sitting
4. **Watt density required to maintain comfort**
5. **Mounting height**
6. **Selecting Proper Heat Pattern**

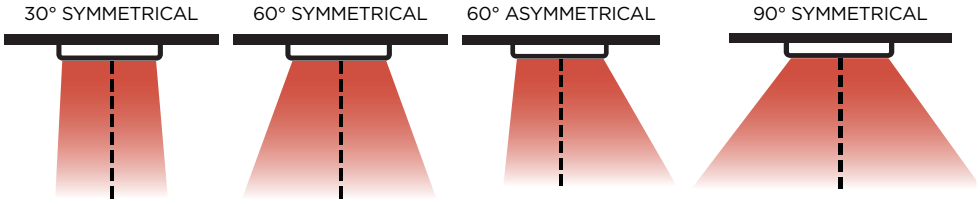

7. **Selecting Proper Heating Elements**

Metal Sheath *High Traffic Areas*	Quartz Tube *Indoor/Outdoor Area/Spot Heating*	Quartz Lamp *High Bays, Snow Melting*	Flat Panel Emitter *Indoor/Outdoor Area/Invisible Heating*
Impact ✓✓✓	Impact ✓	Impact ✓	Impact ✓✓
Vibration ✓✓✓	Vibration ✓	Vibration ✓	Vibration ✓✓✓
Splashing ✓✓✓	Splashing ✓✓✓	Splashing ✓✓	Splashing ✓
Wind ✓	Wind ✓✓	Wind ✓✓✓	Wind ✓✓

RESPONSE TIME, DESIGN TO SPEC, INTENSITY/OUTPUT, EFFICIENCY

8. **Product Selection** After determining the requirements above, visit the product portion of our catalog to select appropriately sized heaters for your application. Contact your sales representative for more information on which infrared heaters will work for your specific application.
9. **Control Optimization** For the optimal preforming solution, it is important to understand how the application space should be controlled. Marley offers a variety of control solutions for various types of application needs. Please consult your sales representative for more information on which control options are ideal for your specific application.

For Spaces that Require High Output & Optimal Design Flexibility

The QMark infrared heater line is designed with multiple configurations and options to meet the unique requirements of any environment. Whether you need targeted spot heating or snow melting solutions for harsh winter conditions, our systems deliver exceptional performance and reliability. With a focus on flexibility, our products adapt seamlessly to your specific needs, ensuring optimal efficiency and comfort. Ideal for residential, commercial and industrial applications, our solutions provide the perfect balance of functionality and design.



FRP & FRS INFRARED

Elevate the safety and comfort of your outdoor spaces with infrared heat from QMark. The 2- or 3-element models provide concentrated heating capacity in a single infrared radiant heater. Specifically designed for high output and rapid response, these heaters are the perfect solution for supplemental or spot heating target areas.



FRP & FRS INFRARED WITH RECESSED FRAME

Keep visitors warm and comfortable with our recessed infrared heater. This heater combines an FRP or FRS infrared unit with an additional trim kit accessory that enables the heater to be used in spaces with overhangs without consequence of wind or inclement weather adversely affecting the installation of the heater or obscuring the surrounding views.

Preserve sight lines and reclaim space with a mostly hidden heat source that installs right in the ceiling.

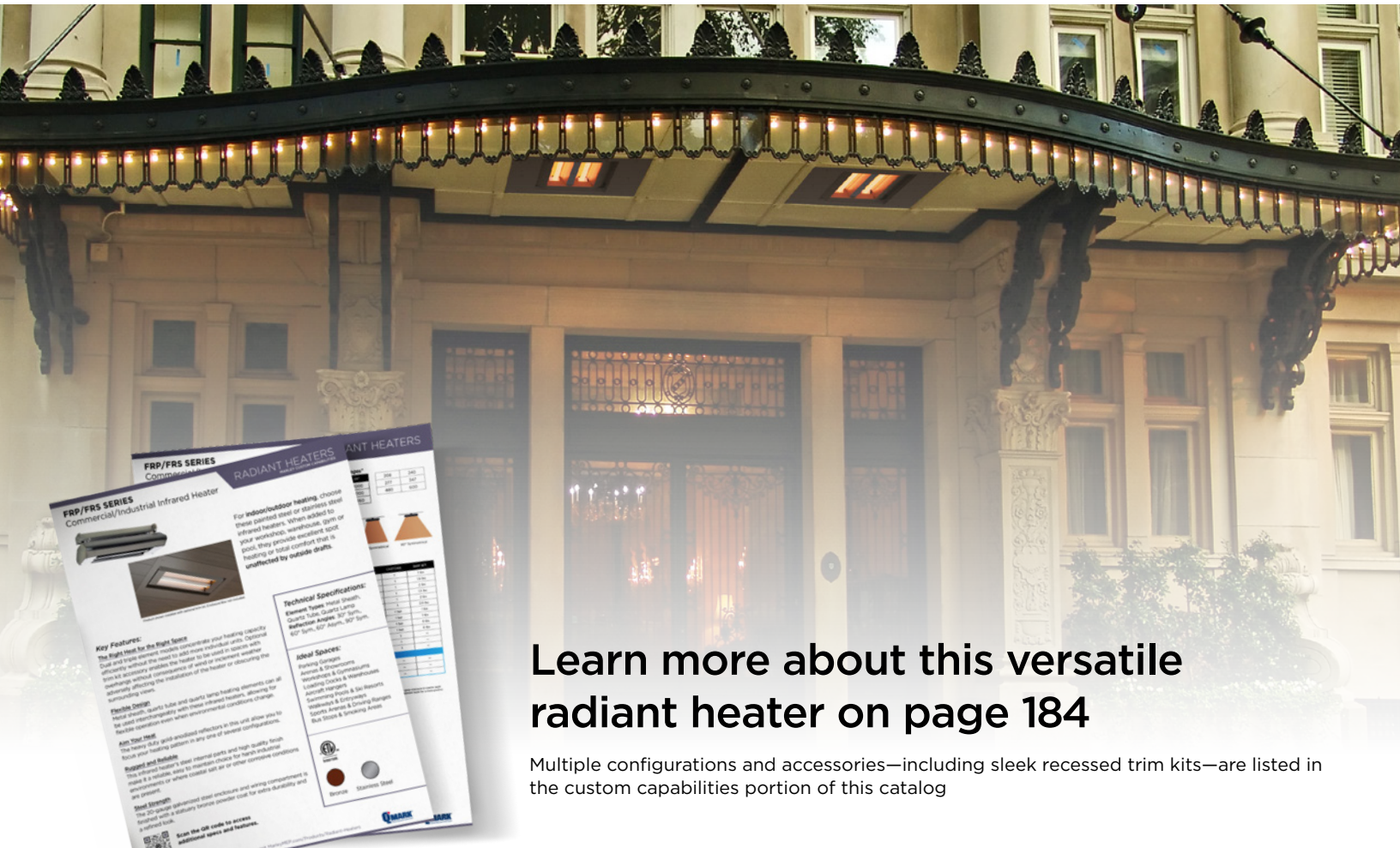

Learn more about this versatile radiant heater on page 184

Multiple configurations and accessories—including sleek recessed trim kits—are listed in the custom capabilities portion of this catalog

THERMAZONE® SERIES
Industrial/Commercial/Residential Infrared Heater

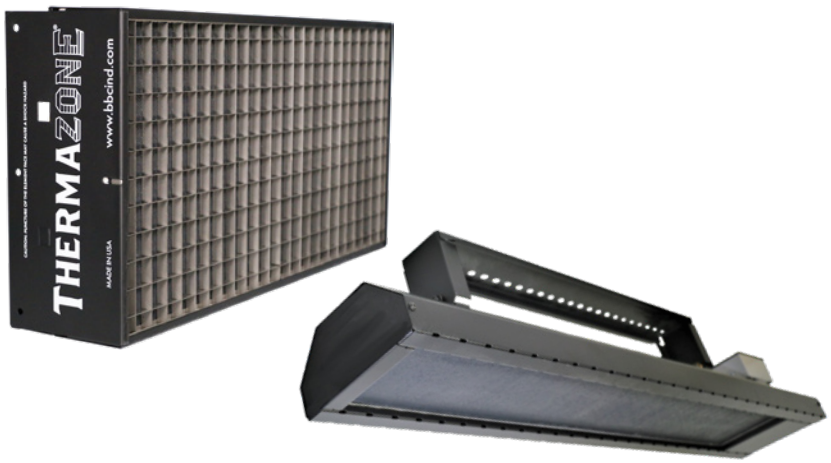

With **no moving parts** to wear out, Thermazone will last you for years to come, all the while giving you **safe, clean, energy-efficient heat**. There are no combustion products discharged, no flames, and no noxious gases emitted. Meaning there is no need to ventilate.

Key Features:

No Moving Parts
Nothing to break or wear out means the Thermazone is maintenance free.

No Lamps
Save yourself money and frustration by never having to replace a lamp.

No Reflectors to Clean
No lamps mean no need for reflectors. Another reason Thermazone® heaters require zero maintenance.

No Orange Glow
Every Thermazone has a clean, black face which does not give off any light, meaning it neatly blends into the background.

100% Electric
No flames or noxious gases means Thermazone heaters are odor free and do not require ventilation.

Superior Energy Efficiency
Nearly all of the energy provided to the heater is converted into useful heat.

NEW PRODUCT!

Scan the QR code to access additional specs and features.

Technical Specifications:

Element Types:
Flat Panel Emitter
Reflection Angle: 60° Sym.

Ideal Spaces:

Warehouses & Factories
Manufacturing Plants
Storage Facilities
Workshops and Garages
Autobody and Repair Shops
Fitness Studios & Hot Yoga
Restaurants
Patios & Docks
Walkways & Entryways

Black
Stainless Steel

QMARK A Marley Engineered Products Brand
rev: Aug 2026

THERMAZONE® SERIES
Industrial/Commercial/Residential Infrared Heater

Models & Specifications — Thermazone:

ITEM INFORMATION		ELECTRICAL DATA					DIMENSIONAL DATA	
	CATALOG NO.	MODEL	WATTS	PHASE	VOLTS	AMPS	DIMENSIONS	SHIP WT.
●	QR-STS-U12-0871B	1X	871	1	120	7.3	12" x 12" x 5 ½"	10 lbs
●	QR-STS-U12-1081B	1X	1081	1	120	9.0	12" x 12" x 5 ½"	10 lbs
●	QR-STS-U12-1111B	1X	1111	1	120	9.3	12" x 12" x 5 ½"	10 lbs
●	QR-STS-U12-1681B	1X	1681	1	120	14.0	12" x 12" x 5 ½"	10 lbs
●	QR-STS-U12-1436V	1X	1077	1	208	5.2	12" x 12" x 5 ½"	10 lbs
			1436		240	6.0	12" x 12" x 5 ½"	10 lbs
●	QR-STS-U24-1015V	2X	762	1	208	3.7	24" x 12" x 5 ½"	20 lbs
			1015		240	4.2	24" x 12" x 5 ½"	20 lbs
●	QR-STS-U24-1316B	2X	1316	1	120	11.0	24" x 12" x 5 ½"	20 lbs
●	QR-STS-U24-1297V	2X	974	1	208	4.7	24" x 12" x 5 ½"	20 lbs
			1297		240	5.4	24" x 12" x 5 ½"	20 lbs
●	QR-STS-U24-1659B	2X	1659	1	120	13.8	24" x 12" x 5 ½"	20 lbs
●	QR-STS-U24-1701V	2X	1276	1	208	6.1	24" x 12" x 5 ½"	20 lbs
			1701		240	7.1	24" x 12" x 5 ½"	20 lbs
●	QR-STS-U24-2192B	2X	2192	1	120	18.3	24" x 12" x 5 ½"	20 lbs
●	QR-STS-U24-2001V	2X	1501	1	208	7.2	24" x 12" x 5 ½"	20 lbs
			2001		240	8.3	24" x 12" x 5 ½"	20 lbs
●	QR-STS-U24-1982N	2X	1982	1	277	7.2	24" x 12" x 5 ½"	20 lbs
●	QR-STS-U24-2060I	2X	2060	1	347	6.0	24" x 12" x 5 ½"	20 lbs
●	QR-STS-U24-2222B	2X	2222	1	120	18.5	24" x 12" x 5 ½"	20 lbs
●	QR-STS-U24-2428V	2X	1821	1	208	8.8	24" x 12" x 5 ½"	20 lbs
			2428		240	10.1	24" x 12" x 5 ½"	20 lbs
●	QR-STS-U24-2388N	2X	2388	1	277	8.6	24" x 12" x 5 ½"	20 lbs
●	QR-STS-U24-2488I	2X	2488	1	347	7.2	24" x 12" x 5 ½"	20 lbs
●	QR-STS-U24-3363B	2X	3363	1	120	28.0	24" x 12" x 5 ½"	20 lbs
●	QR-STS-U24-3239V	2X	2429	1	208	11.7	24" x 12" x 5 ½"	20 lbs
			3239		240	13.5	24" x 12" x 5 ½"	20 lbs
●	QR-STS-U24-3008N	2X	3008	1	277	10.9	24" x 12" x 5 ½"	20 lbs
●	QR-STS-U24-3176I	2X	3176	1	347	9.2	24" x 12" x 5 ½"	20 lbs
●	QR-STS-U24-1992P	2X	1496	3	208	4.2	24" x 12" x 5 ½"	20 lbs
			1992		240	4.8	24" x 12" x 5 ½"	20 lbs
●	QR-STS-U24-2442P	2X	1834	3	208	5.1	24" x 12" x 5 ½"	20 lbs
			2442		240	5.9	24" x 12" x 5 ½"	20 lbs
●	QR-STS-U24-3041P	2X	2284	3	208	6.4	24" x 12" x 5 ½"	20 lbs
			3041		240	5.9	24" x 12" x 5 ½"	20 lbs
●	QR-STS-U48-2030V	4X	1523	1	208	7.3	48" x 12" x 5 ½"	38 lbs
			2030		240	8.5	48" x 12" x 5 ½"	38 lbs
●	QR-STS-U48-2014I	4X	2014	1	347	5.8	48" x 12" x 5 ½"	38 lbs
●	QR-STS-U48-2030T	4X	2030	1	480	4.2	48" x 12" x 5 ½"	38 lbs
●	QR-STS-U48-2594V	4X	1946	1	208	9.4	48" x 12" x 5 ½"	38 lbs
			2594		240	10.8	48" x 12" x 5 ½"	38 lbs
●	QR-STS-U48-2502I	4X	2502	1	347	7.2	48" x 12" x 5 ½"	38 lbs
●	QR-STS-U48-2594T	4X	2594	1	480	5.4	48" x 12" x 5 ½"	38 lbs
●	QR-STS-U48-3402V	4X	2552	1	208	12.3	48" x 12" x 5 ½"	38 lbs
			3402		240	14.2	48" x 12" x 5 ½"	38 lbs
●	QR-STS-U48-3206I	4X	3206	1	347	9.2	48" x 12" x 5 ½"	38 lbs
●	QR-STS-U48-3402T	4X	3402	1	480	7.1	48" x 12" x 5 ½"	38 lbs
●	QR-STS-U48-4002V	4X	3002	1	208	14.5	48" x 12" x 5 ½"	38 lbs
			4002		240	16.7	48" x 12" x 5 ½"	38 lbs
●	QR-STS-U48-3964N	4X	3964	1	277	14.3	48" x 12" x 5 ½"	38 lbs
●	QR-STS-U48-4120I	4X	4120	1	347	11.9	48" x 12" x 5 ½"	38 lbs
●	QR-STS-U48-4002T	4X	4002	1	480	8.3	48" x 12" x 5 ½"	38 lbs
●	QR-STS-U48-4042Y	4X	4042	1	600V	6.7	48" x 12" x 5 ½"	38 lbs

SKU Legend: ◆ **= Popular Products** ● **= Extended Offering** (Contact your local Marley Sales Representative for typically associated lead times)

QMARK A Marley Engineered Products Brand

rev: Aug 2026

THERMAZONE® SERIES
Industrial/Commercial/Residential Infrared Heater

Models & Specifications — Thermazone (continued):

ITEM INFORMATION		ELECTRICAL DATA					DIMENSIONAL DATA	
	CATALOG NO.	MODEL	WATTS	PHASE	VOLTS	AMPS	DIMENSIONS	SHIP WT.
●	QR-STS-U48-4856V	4X	3642	1	208	17.5	48″ x 12″ x 5 ½″	38 lbs
			4856		240	20.2	48″ x 12″ x 5 ½″	38 lbs
●	QR-STS-U48-4776N	4X	4776	1	277	17.2	48″ x 12″ x 5 ½″	38 lbs
●	QR-STS-U48-4976I	4X	4976	1	347	14.4	48″ x 12″ x 5 ½″	38 lbs
●	QR-STS-U48-4856T	4X	4856	1	480	10.1	48″ x 12″ x 5 ½″	38 lbs
●	QR-STS-U48-4878Y	4X	4878	1	600	8.1	48″ x 12″ x 5 ½″	38 lbs
●	QR-STS-U48-6478V	4X	4859	1	208	23.4	48″ x 12″ x 5 ½″	38 lbs
			6478		240	27.0	48″ x 12″ x 5 ½″	38 lbs
●	QR-STS-U48-6056N	4X	6056	1	277	21.7	48″ x 12″ x 5 ½″	38 lbs
●	QR-STS-U48-6352I	4X	6352	1	347	18.3	48″ x 12″ x 5 ½″	38 lbs
●	QR-STS-U48-6478T	4X	6478	1	480	13.5	48″ x 12″ x 5 ½″	38 lbs
●	QR-STS-U48-6118Y	4X	6118	1	600	10.2	48″ x 12″ x 5 ½″	38 lbs
●	QR-STS-U48-3971P	4X	2983	3	208	8.3	48″ x 12″ x 5 ½″	38 lbs
			3971		240	9.6	48″ x 12″ x 5 ½″	38 lbs
●	QR-STS-U48-3928U	4X	3928	3	480	4.7	48″ x 12″ x 5 ½″	38 lbs
●	QR-STS-U48-3963Z	4X	3963	3	600	3.8	48″ x 12″ x 5 ½″	38 lbs
●	QR-STS-U48-4794P	4X	3601	3	208	10.0	48″ x 12″ x 5 ½″	38 lbs
			4794		240	11.5	48″ x 12″ x 5 ½″	38 lbs
●	QR-STS-U48-4838U	4X	4838	3	480	5.8	48″ x 12″ x 5 ½″	38 lbs
●	QR-STS-U48-4797Z	4X	4797	3	600	4.6	48″ x 12″ x 5 ½″	38 lbs
●	QR-STS-U48-5954P	4X	4472	3	208	12.4	48″ x 12″ x 5 ½″	38 lbs
			5954		240	14.3	48″ x 12″ x 5 ½″	38 lbs
●	QR-STS-U48-6060U	4X	6060	3	480	7.3	48″ x 12″ x 5 ½″	38 lbs
●	QR-STS-U48-5982Z	4X	5982	3	600	5.8	48″ x 12″ x 5 ½″	38 lbs

SKU Legend: ◆ **= Popular Products** ● **= Extended Offering** (Contact your local Marley Sales Representative for typically associated lead times)

Models & Specifications — Thermazone Thin:

ITEM INFORMATION		ELECTRICAL DATA					DIMENSIONAL DATA	
	CATALOG NO.	MODEL	WATTS	PHASE	VOLTS	AMPS	DIMENSIONS	SHIP WT.
●	QR-STT-U18-1091B	18″	1091	1	120	9.1	23 ½″	16 lbs
●	QR-STT-U18-1330B	18″	1330	1	120	11.1	23 ½″	16 lbs
●	QR-STT-U18-1767B	18″	1767	1	120	14.8	23 ½″	16 lbs
●	QR-STT-U18-2161B	18″	2161	1	120	18.0	23 ½″	16 lbs
●	QR-STT-U36-2180V	36″	1635	1	208	6.8	41 ½″	21 lbs
			2180		240	9.1	41 ½″	21 lbs
●	QR-STT-U36-2660V	36″	1998	1	208	7.9	41 ½″	21 lbs
			2660		240	11.1	41 ½″	21 lbs
●	QR-STT-U36-3104V	36″	2331	1	208	11.2	41 ½″	21 lbs
			3104		240	12.9	41 ½″	21 lbs
●	QR-STT-U36-3534V	36″	2665	1	208	12.8	41 ½″	21 lbs
			3534		240	14.8	41 ½″	21 lbs
●	QR-STT-U36-4322V	36″	3246	1	208	15.6	41 ½″	21 lbs
			4322		240	18.0	41 ½″	21 lbs

SKU Legend: ◆ **= Popular Products** ● **= Extended Offering** (Contact your local Marley Sales Representative for typically associated lead times)

Optional Accessories — Thermazone:

CATALOG NO.	DESCRIPTION	COMPATIBLE WITH
03-104	12″ x 24″ SS Grid	All 12″ x 24″ Heaters
		All 1P 12″ x 48″ Heaters*
03-105	12″ x 12″ SS Grid	All 12″ x 12″ Heaters
03-106	12″ x 16″ SS Grid	All 3P 12″ x 48″ Heaters**

* Requires quantity of 2. ** Requires quantity of 3.

THERMAZONE® SERIES
Industrial/Commercial/Residential Infrared Heater

Optional Compatible Controls:

CATALOG NO.	DESCRIPTION	SUPPLY VOLTAGE	PHASE	AMP RATING	SUITABLE WITH		
					CONTACTOR PANEL	STAND ALONE	SSR PANEL
TZ-REM-PT	Fixed Cycle Controller w/ Adjustable Output	120/24	1	NA	—	—	Yes
TZ-PCT	Adjustable Cycle Controller w/ Adjustable Output	120/240	1	28	Yes	Yes	Yes
TZ-TIMER	0–60 Min Heavy Duty In-Wall On/Off Timer	120/240	1	28	Yes	Yes	Yes
TZ-TIMER2HR	0–120 Min Heavy Duty In-Wall On/Off Timer	120/240	1	28	Yes	Yes	Yes
TZ-HUB	App Based Z-Wave Wireless Connection Hub	120	1	NA	Yes	Yes	Yes
TZ-SWITCH	App Based Z-Wave Wireless Junction Box	120/240	1	40	Yes	Yes	Yes
TZ-REMOTE	Z-Wave Compatible Wireless Switch/Wall Remote	Battery	—	NA	—	—	—

Optional controls suitable for isolated control of your heater(s), or to be paired with QMark's line of control panels to operate banks of heaters together. Options range from adjustable output cycle timers with fixed and adjustable cycle times, to standard on/off timer control, and introducing market leading Z-Wave app based control for easy operation from your phone.

Dimensions – Thermazone:

Model	A	B	C	D*
1X	5 ½"	12"	12"	14 ½"
2X	5 ½"	24"	12"	14 ½"
4X	5 ½"	48"	12"	14 ½"

*If using attached bracket

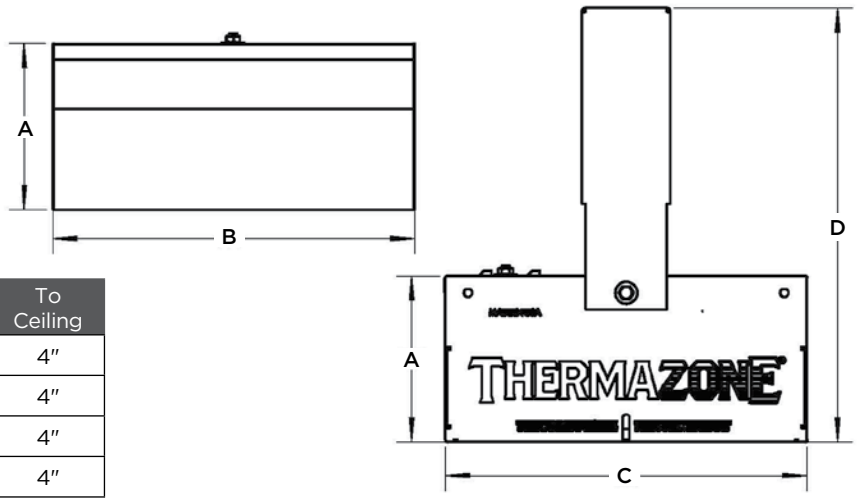

Clearances – Thermazone:

	Between Heaters	To Side Walls	To Ceiling
Wall Mounted	36"	4"	4"
Ceiling Mounted Vertical	36"	36"	4"
Ceiling Mounted Angled Away	36"	4"	4"
Ceiling Mounted Angled Toward	36"	72"	4"

Dimensions – Thermazone Thin:

Model	A	B	C*	D
18"	3 ¾"	24"	9"	8"
36"	3 ¾"	42"	9"	8"

*If using attached bracket

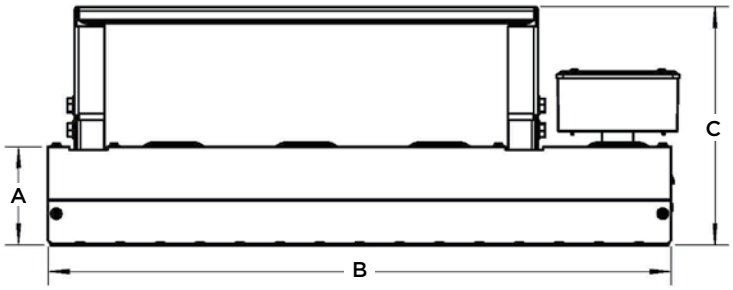

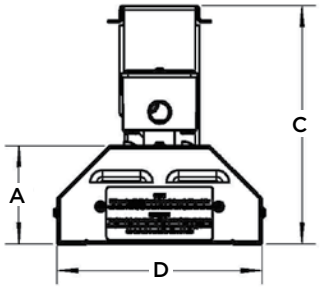

Clearances – Thermazone Thin:

	Between Heaters	To Side Walls	To Ceiling
Wall Mounted	36"	7"	7"
Ceiling Mounted Vertical	36"	36"	4"
Ceiling Mounted Angled Away	36"	7"	7"
Ceiling Mounted Angled Toward	36"	72"	4"

Reflection Angle:

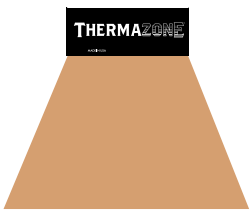

60° Symmetrical

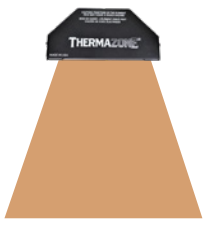

60° Symmetrical

QMARK A Marley Engineered Products Brand
rev: Aug 2026

THZ CONTROL PANELS

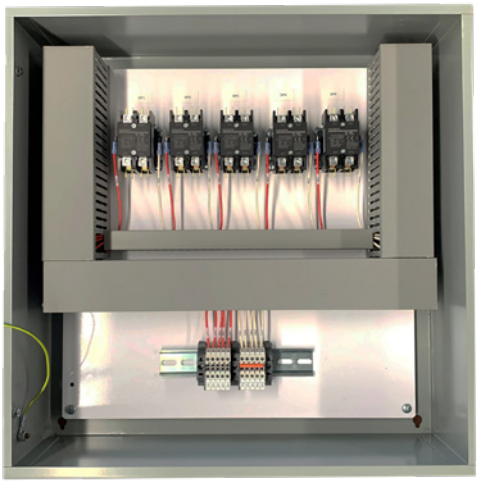

Contactor Panel



SSR Panel

Key Features:

Wide Range of Configurations

Factory-wired for efficient installations to include terminal blocks, multi-position selector switches, 24V or 120V low voltage control circuit, and other project specific accessories. Three phase panels available with 30A or 60A contactors in 2, 5, 10 or 20 unit designs; supply voltage from 208–600V. Single phase panels available with 30A contactors in 2, 5, 10 or 20 unit designs; supply voltage from 120–600V.

Enclosure Options

Nema Type 1 and Type 3R enclosure available, cULus listed and labeled control panels.

Suitable for Low and Medium Cycle Controllers

Designed to take in a wide variety of inputs. As example: standard wall thermostats, smart thermostats, on/off, timers, rheostats, percentage timers, and custom touch screen operation.

Zone Control

Single and multi-zone control capability.

GFI Protection

GFI protection can be added to all 30A options for the 2, 5, and 10 circuits panels.

Customizations

Custom panels available to include BACnet support, BMS integration, touch screen control, safety disconnects, and anything else your project requires. Reach out to your local Marley sales representative for additional details.

NEW PRODUCT!

Scan the QR code to access additional specs and features.

QMARK A Marley Engineered Products Brand

rev: Aug 2026

Models & Specifications – Contactor Panel:

		ITEM INFORMATION		ELECTRICAL DATA		ENCLOSURE SIZE (H x W x D)			
		CATALOG NO.	DESCRIPTION	SUPPLY VOLTAGE	PHASE	TYPE 1	TYPE 1 "-GFI"	TYPE 3R "-3R"	TYPE 3R "-3R-GFI"
■	1-Circuit Panel	BR-THZ-S30-1C-0	1 DP Contactor, 30amps each, 24vac control	120–600	1	20" x 16" x 6"	24" x 16" x 6"	20" x 16" x 6"	24" x 20" x 6"
■		BR-THZ-S30-1C-1	1 DP Contactor, 30amps each, 120vac control	120–600	1	20" x 16" x 6"	24" x 16" x 6"	20" x 16" x 6"	24" x 20" x 6"
■		BR-THZ-T30-1C-0	1 DP Contactor, 30amps each, 24vac control	208–600	3	20" x 16" x 6"	24" x 20" x 6"	20" x 16" x 6"	24" x 20" x 6"
■		BR-THZ-T30-1C-1	1 DP Contactor, 30amps each, 120vac control	208–600	3	20" x 16" x 6"	24" x 20" x 6"	20" x 16" x 6"	24" x 20" x 6"
■	2-Circuit Panel	BR-THZ-S30-2C-0	2 DP Contactors, 30amps each, 24vac control	120–600	1	20" x 16" x 6"	24" x 16" x 6"	20" x 16" x 6"	24" x 20" x 6"
■		BR-THZ-S30-2C-1	2 DP Contactors, 30amps each, 120vac control	120–600	1	20" x 16" x 6"	24" x 16" x 6"	20" x 16" x 6"	24" x 20" x 6"
■		BR-THZ-T30-2C-0	2 DP Contactors, 30amps each, 24vac control	208–600	3	20" x 16" x 6"	24" x 20" x 6"	20" x 16" x 6"	24" x 20" x 6"
■		BR-THZ-T30-2C-1	2 DP Contactors, 30amps each, 120vac control	208–600	3	20" x 16" x 6"	24" x 20" x 6"	20" x 16" x 6"	24" x 20" x 6"
■	5-Circuit Panel	BR-THZ-S30-5C-0	5 DP Contactors, 30amps each, 24vac control	120–600	1	24" x 16" x 6"	24" x 24" x 6"	24" x 20" x 6"	24" x 20" x6"
■		BR-THZ-S30-5C-1	5 DP Contactors, 30amps each, 120vac control	120–600	1	24" x 16" x 6"	24" x 24" x 6"	24" x 20" x 6"	24" x 20" x 6"
■		BR-THZ-T30-5C-0	5 DP Contactors, 30amps each, 24vac control	208–600	3	24" x 24" x 6"	30" x 24" x 6"	24" x 24" x 6"	30" x 24" x 8"
■		BR-THZ-T30-5C-1	5 DP Contactors, 30amps each, 120vac control	208–600	3	24" x 24" x 6"	30" x 24" x 6"	24" x 24" x 6"	30" x 24" x 8"
■		BR-THZ-T60-5C-0	5 DP Contactors, 60amps each, 24vac control	208–600	3	30" x 24" x 8"	—	30" x 24" x 8"	—
■		BR-THZ-T60-5C-1	5 DP Contactors, 60amps each, 120vac control	208–600	3	30" x 24" x 8"	—	30" x 24" x 8"	—
■	10-Circuit Panel	BR-THZ-S30-10C-0	10 DP Contactors, 30amps each, 24vac control	120–600	1	24" x 20" x 6"	30" x 24" x 6"	24" x 20" x 6"	36" x 24" x 8"
■		BR-THZ-S30-10C-1	10 DP Contactors, 30amps each, 120vac control	120–600	1	24" x 20" x 6"	30" x 24" x 6"	24" x 20" x 6"	26" x 24" x 8"
■		BR-THZ-T30-10C-0	10 DP Contactors, 30amps each, 24vac control	208–600	3	30" x 24" x 6"	36" x 24" x 6"	30" x 24" x 8"	36" x 30" x 8"
■		BR-THZ-T30-10C-1	10 DP Contactors, 30amps each, 120vac control	208–600	3	30" x 24" x 6"	36" x 24" x 6"	30" x 24" x 8"	36" x 30" x 8"
■		BR-THZ-T60-10C-0	10 DP Contactors, 60amps each, 24vac control	208–600	3	30" x 24" x 6"	—	30" x 24" x 8"	—
■		BR-THZ-T60-10C-1	10 DP Contactors, 60amps each, 120vac control	208–600	3	30" x 24" x 6"	—	30" x 24" x 8"	—
■	20-Circuit Panel	BR-THZ-S30-20C-0	20 DP Contactors, 30amps each, 24vac control	120–600	1	36" x 24" x 6"	—	36" x 24" x 8"	—
■		BR-THZ-S30-20C-1	20 DP Contactors, 30amps each, 120vac control	120–600	1	36" x 24" x 6"	—	36" x 24" x 8"	—
■		BR-THZ-T30-20C-0	20 DP Contactors, 30amps each, 24vac control	208–600	3	36" x 36" x 6"	—	36" x 30" x 8"	—
■		BR-THZ-T30-20C-1	20 DP Contactors, 30amps each, 120vac control	208–600	3	36" x 30" x 6"	—	36" x 30" x 8"	—
■		BR-THZ-T60-20C-0	20 DP Contactors, 60amps each, 24vac control	208–600	3	36" x 30" x 6"	—	36" x 30" x 8"	—
■		BR-THZ-T60-20C-1	20 DP Contactors, 60amps each, 120vac control	208–600	3	36" x 30" x 6"	—	36" x 30" x 8"	—

SKU Legend: ◆ **= Popular Products** ● **= Extended Offering** ■ **= Made to Order** (Contact your local Marley Sales Representative for typically associated lead times)
Add "-3R" to Catalog No. to upgrade the Contactor Panel or SSR Panel to a Type 3R enclosure.
Add "-GFI" to Catalog No. GFI protection to the control panel.

THZ CONTROL PANELS

Models & Specifications – SSR Panel:

		ITEM INFORMATION		ELECTRICAL DATA		ENCLOSURE SIZE (H x W x D)			
		CATALOG NO.	DESCRIPTION	SUPPLY VOLTAGE	PHASE	TYPE 1	TYPE 1 "-GFI"	TYPE 3R "-3R"	TYPE 3R "-3R-GFI"
■	1-Circuit Panel	QR-THZ-S30-1SR-24DC	1 SSR, 30amps each, 24vdc control	120-480	1	20" x 16" x 8"	30" x 24" x 6"	20" x 16" x 8"	24" x 20" x 6"
■		QR-THZ-T30-1SR-24DC	1 SSR, 30amps each, 24vdc control	208-480	3	20" x 16" x 8"	30" x 24" x 6"	20" x 16" x 8"	24" x 20" x 6"
■	2-Circuit Panel	QR-THZ-S30-2C-0	2 SSR's, 30amps each, 24vdc control	120–480	1	20" x 16" x 8"	30" x 24" x 6"	20" x 16" x 8"	24" x 20" x 6"
■		QR-THZ-T30-2C-1	2 SSR's, 30amps each, 24vdc control	208–480	3	20" x 16" x 8"	30" x 24" x 6"	20" x 16" x 8"	24" x 20" x 6"
■	5-Circuit Panel	QR-THZ-S30-5SR-24DC	5 SSR's, 30amps each, 24vdc control	120–480	1	20" x 20" x 8"	30" x 24" x 8"	30" x 24" x 8"	30" x 24" x 8"
■		QR-THZ-T30-5SR-24DC	5 SSR's, 30amps each, 24vdc control	208–480	3	24" x 20" x 8"	30" x 24" x 8"	30" x 24" x 8"	30" x 24" x 8"
■	10-Circuit Panel	QR-THZ-S30-10SR-24DC	10 SSR's, 30amps each, 24vdc control	120–480	1	30" x 24" x 8"	30" x 24" x 8"	30" x 24" x 8"	36" x 30" x 8"
■		QR-THZ-T30-10SR-24DC	10 SSR's, 30amps each, 24vdc control	208–480	3	30" x 24" x 8"	30" x 24" x 8"	30" x 24" x 8"	36" x 30" x 8"
■	20-Circuit Panel	QR-THZ-S30-20SR-24DC	20 SSR's, 30amps each, 24vdc control	120–480	1	36" x 24" x 8"	—	42" x 30" x 8"	—
■		QR-THZ-T30-20SR-24DC	20 SSR's, 30amps each, 24vdc control	208–480	3	36" x 30" x 8"	—	42" x 30" x 8"	—

SKU Legend: ◆ **= Popular Products** ● **= Extended Offering** ■ **= Made to Order** (Contact your local Marley Sales Representative for typically associated lead times)
Add "-3R" to Catalog No. to upgrade the Contactor Panel or SSR Panel to a Type 3R enclosure.
Add "-GFI" to Catalog No. GFI protection to the control panel.

Optional Compatible Controls:

CATALOG NO.	DESCRIPTION	SUPPLY VOLTAGE	PHASE	AMP RATING	SUITABLE WITH		
					CONTACTOR PANEL	STAND ALONE	SSR PANEL
TZ-REM-PT	Fixed Cycle Controller w/ Adjustable Output	120/24	1	NA	—	—	Yes
TZ-PCT	Adjustable Cycle Controller w/ Adjustable Output	120/240	1	28	Yes	Yes	Yes
TZ-TIMER	0–60 Min Heavy Duty In-Wall On/Off Timer	120/240	1	28	Yes	Yes	Yes
TZ-TIMER2HR	0–120 Min Heavy Duty In-Wall On/Off Timer	120/240	1	20	Yes	Yes	Yes
TZ-HUB	App Based Z-Wave Wireless Connection Hub	120	1	NA	Yes	Yes	Yes
TZ-SWITCH	App Based Z-Wave Wireless Junction Box	120/240	1	40	Yes	Yes	Yes
TZ-REMOTE	Z-Wave Compatible Wireless Switch/Wall Remote	Battery	—	NA	—	—	—

Optional controls suitable for isolated control of your heater(s), or to be paired with QMarks line of control panels to operate banks of heaters together. Options range from adjustable output cycle timers with fixed and adjustable cycle times, to standard on/off timer control, and introducing market leading Z-Wave app based control for easy operation from your phone.

NEW PRODUCT!



Learn more about this flipable duct heater in our digital catalog

New Energy Efficiency Ratings for

COMMERCIAL AND INDUSTRIAL CEILING FANS

Learn more on page 111

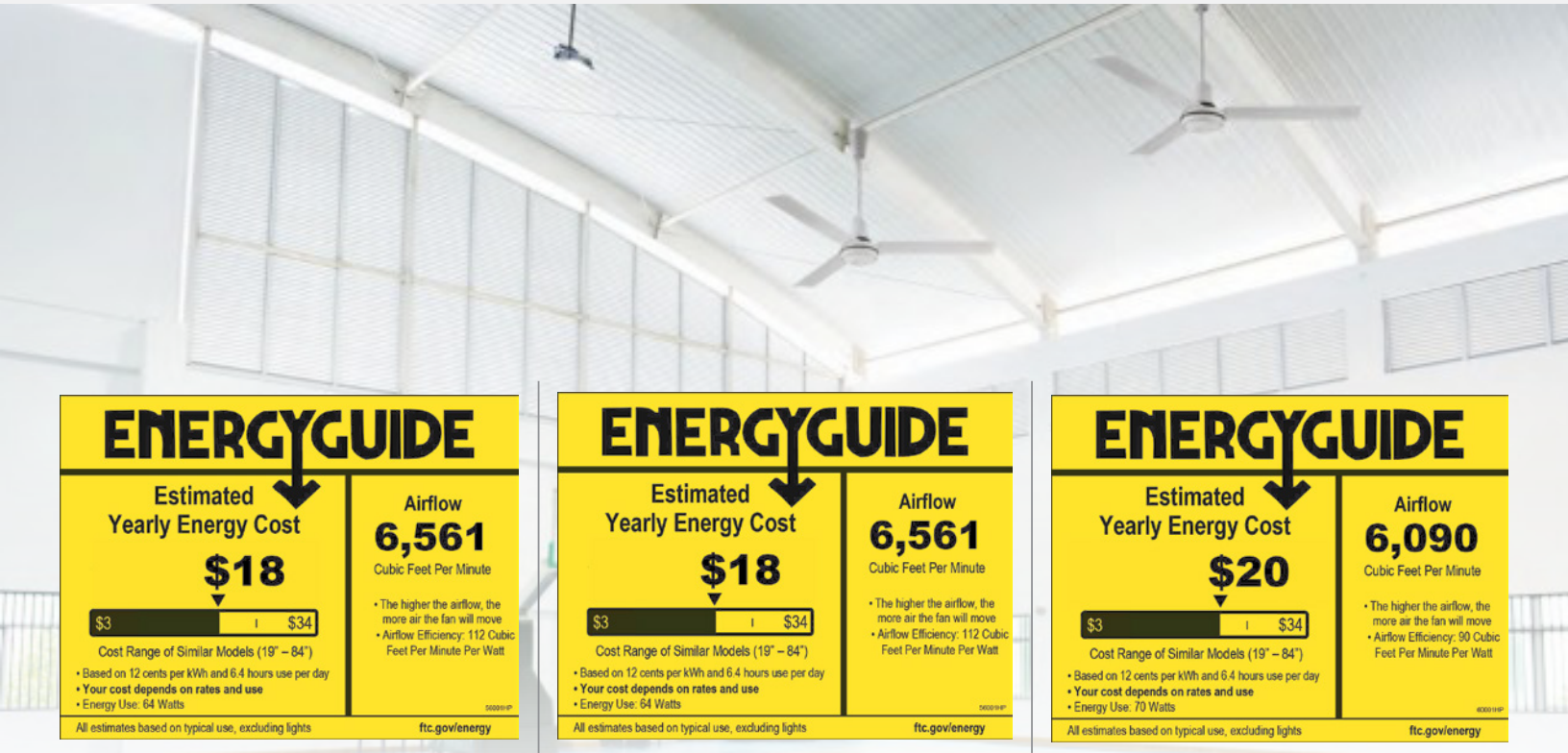

56001HP

60001HP

56007HP

HRK SERIES
Commercial/Industrial Single-Element Infrared Heater

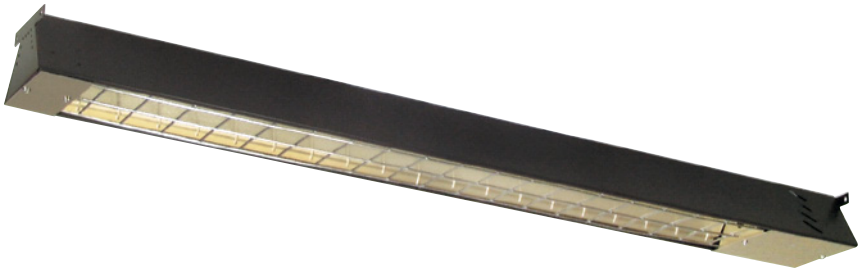

These infrared heaters work well in garages, loading docks, hangars and warehouses. Their single quartz element provides reliable output that is **unaffected by outside air movement and drafts**.

Key Features:

Rugged and Reliable

This infrared heater's steel internal parts and high quality finish make it a reliable, easy to maintain choice for industrial environments where durability is key. Water resistant for outdoor adjacent spaces.

Elite Heat

A heavy duty gold-anodized reflector allows this heater to deliver one of the highest levels of radiant heat energy possible.

Flexible Mounting

Chains are included for easy suspended ceiling applications. An optional wall mounting bracket allows you to approach your heating needs from other angles as well.

Safety Screen

Install the optional HWG wire guard to create a preventative barrier that stops foreign objects from contacting the heating element.

Technical Specifications:

Element Type: Quartz Lamp
Reflection Angles: 60° Sym.

Ideal Spaces:

Parking Garages
Showrooms
Work Stations
Loading Docks
Aircraft Hangers
Warehouses

Intertek

Bronze

Scan the QR code to access additional specs and features.

rev: Aug 2026

HRK SERIES
Commercial/Industrial Single-Element Infrared Heater

Models & Specifications:

	ITEM INFORMATION		ELECTRICAL DATA				DIMENSIONAL DATA	
	CATALOG NO.	UPC	VOLTS	WATTS	BTU/HR.	AMPS	HEIGHT	SHIP WT.
●	HRK41512	685360082806	120	1500	5,118	12.5	46″	9 lbs
●	HRK42020	685360082813	208	2000	6,824	9.6	46″	9 lbs
●	HRK42024	685360082820	240	2000	6,824	8.3	46″	9 lbs
●	HRK53020	685360082882	208	3000	10,236	14.4	57″	11 lbs
●	HRK53024	685360082899	240	3000	10,236	12.5	57″	11 lbs
●	HRK42027	685360082837	277	2000	6,824	7.2	46″	9 lbs
●	HRK42034	685360082844	347	2000	6,824	5.8	46″	9 lbs
●	HRK42048	685360082868	480	2000	6,824	4.2	46″	9 lbs
●	HRK42060	685360082875	600	2000	6,824	3.3	46″	9 lbs
●	HRK53027	685360082905	277	3000	10,236	10.8	57″	11 lbs
●	HRK53034	685360082912	347	3000	10,236	8.6	57″	11 lbs
●	HRK53048	685360082936	480	3000	10,236	6.3	57″	11 lbs
●	HRK53060	685360082943	600	3000	10,236	5.0	57″	11 lbs

SKU Legend: ◆ **= Popular Products** ● **= Extended Offering** (Contact your local Marley Sales Representative for typically associated lead times)

NOTE: Quartz Lamp: used indoors for spot heating. Maintain at least 5 ft. in radiant path, between bottom of heater and combustible material. Pigtail element leads for a more positive connection in high-traffic areas where physical abuse.

Optional Accessories:

CATALOG NO.	UPC	DESCRIPTION	COMPATIBLE WITH	CARTONS	SHIP WT.
HWG46	685360108506	Wire Guard	HRK4	1	1 lbs
HWG57	685360108513	Wire Guard	HRK5	1	1 ½ lbs

Dimensions and Clearances:

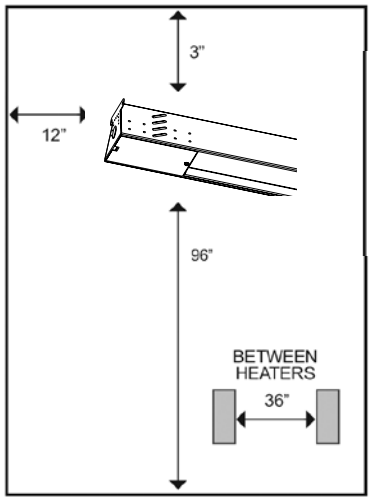

MOUNTING CLEARANCES

- 12 in. to vertical side walls
- 36 in. between heaters mounted side by side. Heaters may be mounted end to end.
- 3 in. to ceiling
- 96 in. to floor

BRM SERIES
Industrial Washdown Infrared Heater

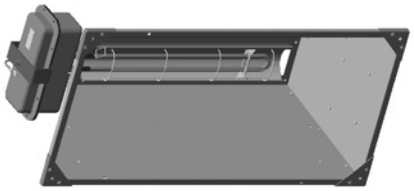

2.0 kW Fixed*

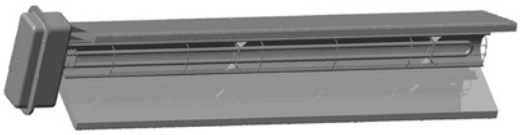

4.5 kW Fixed*

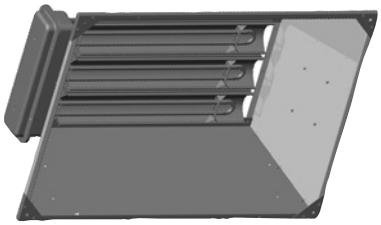

6.0 kW Fixed*

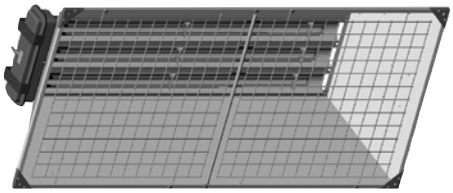

13.5 kW Fixed with Grille*

Industrial stainless steel infrared heaters provide **fan-free warmth** in open areas like repair bays, walkways, assembly areas, foundries and loading docks.

Key Features:

High Output

The heavy duty U-bend heating element provides high wattage density, converting energy directly to heat at 100% efficiency at high efficiencies.

Wash-Down Capable

A sealed wiring compartment means you can wash down this unit safely and easily without worrying about moisture affecting its operation.

Rugged and Reliable

Designed for harsh industrial settings, these stainless steel heaters provide a durable source of heat. Optional safety grilles can be added for extra protection.

* Product images are shown at an angle for display purposes only and cannot be installed in this manner.

Technical Specifications:

Element Type: Metal Sheath
Reflection Angles: 90° Sym.

Ideal Spaces:

Wastewater Treatment Plants
Loading Docks
Foundries
Auto or Marine Repair Facilities
Walkways
Assembly Areas
Enclosed Smoking Areas
Indoor Storage Areas
Covered Outdoor Storage Areas

Extruded Aluminum

Scan the QR code to access additional specs and features.

rev: Aug 2026

BRM SERIES
Industrial Washdown Infrared Heater

Models & Specifications:

	ITEM INFORMATION		ELECTRICAL DATA					
	CATALOG NO.	UPC	VOLTS	PHASE	WATTS	BTU/HR.	AMPS	SHIP WT.
●	BRM4581	685360014067	208	1	4,500	15,354	21.6	18 lbs
●	BRM4521	685360014036	240	1	4,500	15,354	18.8	18 lbs
●	BRM4541	685360014043	480	1	4,500	15,354	9.4	18 lbs
●	BRM6083	685360014104	208	1 and 3	6,000	20,472	28.8	25 lbs
●	BRM6023	685360014074	240	1 and 3	6,000	20,472	25.0	25 lbs
●	BRM6043	685360014081	480	1 and 3	6,000	20,472	12.5	25 lbs
■	BRM2081	685360104799	208	1	2,000	6,824	9.6	18 lbs
■	BRM2021	685360104737	240	1	2,000	6,824	8.3	18 lbs
■	BRM2041	685360104768	480	1	2,000	6,824	4.2	18 lbs
■	BRM2061	685360104775	600	1	2,000	6,824	3.3	18 lbs
■	BRM4561	685360104829	600	1	4,500	15,354	7.5	18 lbs
■	BRM6071	685360104867	277	1	6,000	20,472	21.7	25 lbs
■	BRM6063	685360014098	600	1 and 3	6,000	20,472	10.0	25 lbs
■	BRM13583	685360152141	208	3	13,500	46,062	64.9	55 lbs
■	BRM13523	685360151335	240	3	13,500	46,062	56.3	55 lbs
■	BRM13571	685360104720	277	1	13,500	46,062	48.7	55 lbs
■	BRM13543	685360014005	480	1 and 3	13,500	46,062	28.1	55 lbs
■	BRM13563	685360014012	600	1 and 3	13,500	46,062	22.5	55 lbs

SKU Legend: ◆ **= Popular Products** ● **= Extended Offering** ■ **= Made to Order** (Contact your local Marley Sales Representative for typically associated lead times)

NOTE: Metal Sheathed: used indoors in high-traffic areas. Maintain at least 5 ft. in radiant path, between bottom of heater and combustible material. Pigtail element leads for a more positive connection in high-traffic areas where physical abuse. See following page for infrared accessories. Ground Fault Detection: Ground fault detection equipment is designed to monitor for any gradual changes in the insulation level due to humidity or mechanical damage as it develops, thus, de-energizing the load to prevent arcing type faults, preventing premature element failure and potential fire damage. As a safety precaution it is highly recommended that industrial infrared heaters must be protected by ground fault detection. Failure to comply could result in a building fire or serious equipment damage.

BRM SERIES
Industrial Washdown Infrared Heater

Optional Accessories
Cord & Plug Kits For Industrial M Series Heaters

ITEM INFORMATION				ELECTRICAL DATA					
CATALOG NO.	POWER CORDS	LOCKING	NON-LOCKING	kW	VOLTS	PHASE	AMPS	WIRE SIZE	SHIP WT.
M6083B	CS25063	LPS25083	NPS25650	6	208	1	28.8	6/3	25 lbs
M6083B	CS25064	LPS25124	NPS1550	6	208	3	16.7	6/4	25 lbs
M6023B	CS25063	LPS25083	NPS25650	6	240	1	25.0	6/3	25 lbs
M6023B	CS25064	LPS25124	NPS1550	6	240	3	14.5	6/4	25 lbs
M6071B	CS25063	LPS25083	—	6	277	1	21.7	6/3	25 lbs
M6043B	CS25063	LPS25083	—	6	480	1	12.5	6/3	26 lbs
M6043B	CS25064	LPS25104	—	6	480	3	7.2	6/4	26 lbs
M6063B	CS25063	LPS25083	—	6	600	1	10.0	6/3	26 lbs
M6063B	CS25064	LPS25084	—	6	600	3	5.8	6/4	26 lbs
M13583B	CS25064	LPS25083	NPS1550	13.5	208	3	37.5	6/4	55 lbs
M13523B	CS25064	LPS25083	NPS1550	13.5	240	3	32.5	6/4	55 lbs
M13571B	CS25063	LPS25083	—	13.5	277	1	48.7	6/3	55 lbs
M13543B	CS25063	LPS25083	—	13.5	480	1	28.1	6/3	55 lbs
M13543B	CS25064	LPS25104	—	13.5	480	3	16.3	6/4	55 lbs
M13563B	CS25063	LPS25083	—	13.5	600	1	22.5	6/3	55 lbs
M13563B	CS25062	LPS25084	—	13.5	600	3	13.0	6/4	55 lbs

BRM Safety Grilles, Hanging Kits & Roll-Around Kits:

CATALOG NO.	UPC	DESCRIPTION	SHIP WT.
BRMWG2	685360143323	Safety Grille Kit for BRM 2KW Heaters	3 lbs
BRMWG45	685360143330	Safety Grille Kit for BRM 4.5KW Heaters	3 lbs
BRMWG60	685360143347	Safety Grille Kit for BRM 6KW Heaters	4 lbs
BRMWG135	685360143354	Safety Grille Kit for BRM 13.5KW Heaters	14 lbs
BRMHK	685360143361	Hanging Kit to mount BRM heaters, includes Chain and Hooks	2 lbs
BRM60	685360143385	Rollaround Cart Kit for 6.0KW BRM heaters (Includes Safety Grilles)	8 lbs
BRM135	685360143392	Rollaround Cart Kit for 13.5KW BRM heaters (Includes Safety Grilles)	8 lbs

Control Accessories for Industrial Infrared Heater:

CATALOG NO.	UPC	DESCRIPTION	kW MODELS	SHIP WT.
PDS60050	685360152332	Power Disconnect Kit for Fixed or Portable (M Series)	All	8 lbs
TOS240	685360151663	Tip-Over Switch for Fixed or Portable (M Series) 240V only	6 or 13.5	15 lbs
TOS480	685360151670	Tip-Over Switch for Fixed or Portable (M Series) 480V only	6 or 13.5	15 lbs
WMGF240	685360152349	Wall-Mounted Ground Fault Detection for 240V NEMA 4	All	17 lbs
WMGF277	685360174884	Wall Mounted Ground Fault Detection for 277V NEMA 4	All	17 lbs
WMGF480	685360152356	Wall-Mounted Ground Fault Detection for 480V NEMA 4	All	17 lbs
WMGF600	685360153087	Wall Mounted Ground Fault Detection for 600V NEMA 4	All	17 lbs

NOTE: All infrared accessories on this page are made to order (■). Contact your local Marley Sales Representative for typically associated lead times.

Personalized, controllable comfort exactly where it's desired

Portable heaters deliver efficient heat with easy-to-control comfort settings and built-in safety features.



For personal heating at desks, tables, counters & other workstations, you need something safe, economical and easy to control.

Comfortable heat where you need it.



MSDH QTS MMHD

Their rugged, durable construction make them ideal for construction sites, garages, workshops and for cold office spaces and in bedrooms, family rooms and basements.

202SL SERIES
Radiant Plug-In Under Desk Heater



For **personal heating** you need something safe, economical and easy to control. This under desk heater meets these needs and more. Set it into place, flip the switch, and this unit **immediately puts out radiant warmth**, so it's perfect for close quarters.

Low cost of ownership and energy usage

< .20¢ = 1 Day*

< $1 = 1 Week*

< $20 = 1 Heat Season*

*Usage costs estimates based on energy cost of 10 cents per kWh, 1 Day = 8 hrs., 1 Week = 5 Days and 1 Heat Season = 6 Months

Key Features:

Quiet, Unobtrusive Comfort
For personal heating that won't make noise or disrupt your space, choose an under desk heater. It fits in well at desk, table and counter areas in your family room, office or reception space.

Dual Installation Options
This heater is designed for freestanding operation, or it can be mounted to the wall to free up floor space.

Quick Setup
This heater offers radiant heat in a convenient package with its included power cord and three-prong plug. Just plug it in and you're ready to start heating.

Easy Operation
A lighted on/off switch makes it simple to turn the heat on or off, even in a dark room.

Ideal Spaces:

Bedrooms
Living/Family Room
Kitchens
Basements
Offices
Conference Rooms
Lobbies
Waiting Rooms

Intertek

White

Models & Specifications:

ITEM INFORMATION			ELECTRICAL DATA			DIMENSIONAL DATA			
	CATALOG NO.	UPC	VOLTS	WATTS	AMPS	HEIGHT	WIDTH	DEPTH	SHIP WT.
◆	202SLB	098319889652	120	170	1.4	14 ⅜"	22 ¹⁷⁄₃₂"	1"	8 lbs.
◆	MC202SLR	Master Carton (6 pcs)	120	170	1.4	16 ¼"	27 ⅛"	13 ½"	50 lbs.

SKU Legend: ◆ = **Popular Products** ● = **Extended Offering** (Contact your local Marley Sales Representative for typically associated lead times)

NOTE: Dimensions for Master Carton are shipping dimensions

Optional Accessories:

CATALOG NO.	UPC	DESCRIPTION
APT2	09831988964	Portable Thermostat

Scan the QR code to access additional specs and features.

rev: Aug 2026

WHT500 SERIES
Utility Well House Heater

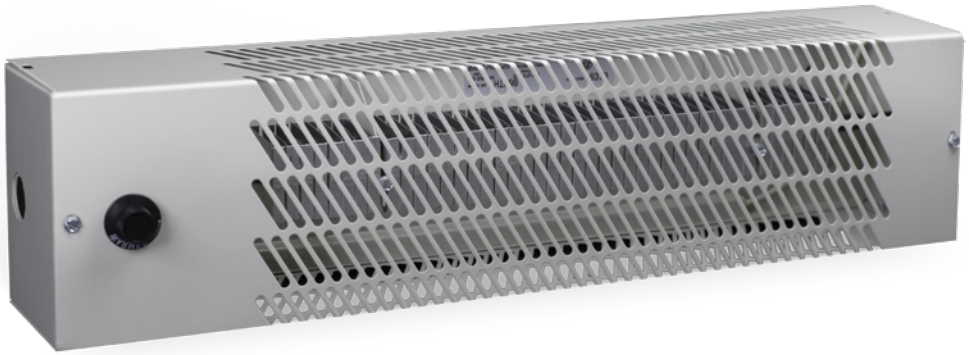

This utility heater provides **long-lasting protection** to keep sensitive equipment running strong. Install it in well houses, utility rooms, relay stations or other areas **where pipes and machinery are vulnerable to freezing**.

Key Features:

Guard Against Freezing
Protect pipes and other fluid-filled machinery from freezing damage with this utility heater. Its aluminum-finned element heats rapidly, and its steel sheath keeps the element cool for longer run time without maintenance.

Tamper-Resistant
Keep live voltage out of the element heating area. The heater features a tamper-resistant control box that contains the power supply and wiring for the unit.

Simple Temperature Management
Simply set the thermostat to your desired temperature with no need for further adjustments for 24-hour, worry-free heating.

Durable Design
Rely on this utility heater for freeze protection, even under rugged conditions. The unit is housed in a galvanized steel cabinet with a corrosion-resistant, epoxy-painted coating to endure seasonal changes and temperature swings.

Field Adaptable
The unit is easily field convertible to 120V, as the installation dictates.

Ideal Spaces:

Wastewater Treatment Plants
Pump Houses
Utility Rooms
Relay Stations
Construction Sheds
Cabins

Intertek

Beige

Models & Specifications:

	ITEM INFORMATION		ELECTRICAL DATA			
	CATALOG NO.	UPC	VOLTS	WATTS	AMPS	SHIP WT.
◆	WHT500	68536008049	240/208/120	500/376/500	2.1/1.8/4.2	6 lbs

SKU Legend: ◆ = **Popular Products** ● = **Extended Offering** (Contact your local Marley Sales Representative for typically associated lead times)

Scan the QR code to access additional specs and features.

For more information visit MarleyMEP.com/Products/Portable-Heaters

rev: Aug 2026

MMHD SERIES
Portable Fan-Forced Utility Heater



Whether you need extra warmth in your family room, basement or home office, this portable utility heater will suit your needs. **Just plug it in** and you are ready to go. The **built-in thermostat** allows you to set just the right temperature for quick comfort in any interior space.

Key Features:

A Rapid Solution
This portable electric heater offers efficient comfort. Its fan-forced design provides rapid output, so you can bring your room up to the desired temperature as soon as possible.

Increase Circulation
When you just want to clear the air, set this heater to fan-only mode. Fan only mode is also an excellent option when the room is already heated to your desired temperature.

Comfort Anywhere
The included grounded plug and 6-foot power cord allow you to move this heater from room to room for comfort that follows you throughout your day.

Easy Operation
The built-in thermostat allows for easy temperature management and control, so you can keep your space as comfortable as possible.

Two-Level Comfort
Two distinct heat settings allow you to heat both large and small spaces. You can quickly and easily double your output to bring more warmth to a wider area.

Ideal Spaces:

Bedrooms
Offices
Conference Rooms
Lobbies
Waiting Rooms

White

Models & Specifications:

ITEM INFORMATION			ELECTRICAL DATA			DIMENSIONAL DATA			
	CATALOG NO.	UPC	VOLTS	WATTS	AMPS	HEIGHT	WIDTH	DEPTH	SHIP WT.
◆	MMHD1502T	098319861689	120	1500	12.5	14 ⅛"	10 ⅛"	6 ¾"	9 ⅕ lbs
			120	1300	10.8				

SKU Legend: ◆ = **Popular Products** ● = **Extended Offering** (Contact your local Marley Sales Representative for typically associated lead times)

Scan the QR code to access additional specs and features.

For more information visit MarleyMEP.com/Products/Portable-Heaters

rev: Aug 2026

MCM SERIES
Portable Fan-Forced/Radiant Utility Heater



This portable utility heater easily switches between **fan-forced or radiant heat**. With varying heat levels and the option to go fanless, it is equally at home in the garage or workshop as it is in playrooms and bedrooms. Dual heating modes and three heat levels give you **precise control** over your comfort level.

Key Features:

Two Ways to Heat
This heater's unique design allows it to run in either fan-forced or radiant mode. So whether you want a quieter room, more air circulation or increased output, this is the most adaptable solution you can find in one convenient portable package.

Comfort Anywhere
The included grounded plug and 6-foot power cord allow you to move this heater from room to room for comfort that follows you throughout your day.

Triple Your Comfort
Three built-in heating levels allow you to adapt your settings for both large and small spaces. You can quickly and easily increase your output to bring more warmth to a wider area.

Heat for Where Life Happens
When you need extra warmth in your family room, basement, playroom or home office, choose this portable heater. Its dual operating modes and rugged design make it a fine choice for garages, workshops and construction sites as well.

Modern Design
A chrome grille offsets the white baked enamel finish on this heating unit, providing a contemporary accent that warms your home and looks good while doing it.

Ideal Spaces:
Bedrooms
Living/Family Room
Kitchens
Basements
Offices
Conference Rooms
Lobbies
Waiting Rooms
Garages

c UL us

White

Models & Specifications:

ITEM INFORMATION			ELECTRICAL DATA				DIMENSIONAL DATA			
	CATALOG NO.	UPC	VOLTS	WATTS	AMPS	BTU/HR.	HEIGHT	WIDTH	DEPTH	SHIP WT.
◆	MCM1503	098319861665	120	1500	12.5	5120	14 ½"	9 ¾"	7 ½"	9 lbs
				900	7.5	3072				
				600	5	2048				

SKU Legend: ◆ = **Popular Products** ● = **Extended Offering** (Contact your local Marley Sales Representative for typically associated lead times)

Scan the QR code to access additional specs and features.

For more information visit MarleyMEP.com/Products/Portable-Heaters

QMARK A Marley Engineered Products Brand

rev: Aug 2026

QPH4A SERIES
Portable Unit Heater



When the temperature drops, bring in some extra warmth with a **heavy-duty** portable heater. With the option to go **freestanding** or **mounted** on the wall or ceiling, it fits perfectly in your garage, workshop or jobsite.

Key Features:

Bring the Heat
This portable electric heater brings heavy-duty fan-forced warmth wherever you need it. The built-in carry handles and 6-foot cord with 240V plug allow you to set up quickly and start heating right away.

Two-Level Comfort
Two distinct heat settings allow you to heat both large and small spaces. Set it to 9100 BTU per hour (2667 watts) or crank it up to 13650 BTU per hour (4000 watts) and bring more warmth to a wider area.

Set Up Anywhere
Portable design provides freestanding warmth wherever you need it. If you've got longterm heating needs, this heater can also be mounted to the wall or ceiling for space-saving convenience.

Warm While You Work
This portable heater delivers powerful, versatile heating for garages and other spaces like workshops or construction sites. Bring one along whenever your task takes you out into the cold.

Ideal Spaces:

Garage
Work Bench
Utility Room
Job Site

c UL us

Bronze

Models & Specifications:

ITEM INFORMATION			ELECTRICAL DATA				DIMENSIONAL DATA			
	CATALOG NO.	UPC	VOLTS	WATTS	AMPS	BTU/HR.	HEIGHT	WIDTH	DEPTH	SHIP WT.
◆	QPH4A	685360065007	208	Low: 2667/2000	12.5/8.3/4.2	9102/9526	14"	16"	8"	25 lbs
			240	High: 4000/3000		13,652/10,239				

SKU Legend: ◆ = **Popular Products** ● = **Extended Offering** (Contact your local Marley Sales Representative for typically associated lead times)

Scan the QR code to access additional specs and features.

For more information visit MarleyMEP.com/Products/Portable-Heaters

QMARK A Marley Engineered Products Brand

rev: Aug 2026

BRH SERIES
Contractor Heater



Keep warm while you work **wherever the job takes you** with this heavy-duty portable construction heater. Its rugged, **low-maintenance design** and easy portability make it a welcome addition to your garage, workshop or jobsite.

Key Features:

Steel Performance
For maximum heat transfer, this model comes equipped with a metal sheathed heating element with a steel spiral fin.

Low Maintenance
For easy operation without the need for repeated maintenance, this heater features a permanently lubricated fan motor so it can keep running strong over the long haul.

Keep Objects Out
The industrial steel intake and discharge grille prevents foreign objects (or people's fingers) from reaching the heater's inner workings.

Safe Operation
The unit's high temperature limit prevents it from overheating, so you can leave the heat on even when you're not present.

Complete Control
This portable construction heater comes equipped with a built-in double-pole thermostat with a positive off switch, so you can be sure it's off before you leave the room.

Ideal Spaces:

Garage
Work Bench
Utility Room
Job Site

c UL us

Red

Models & Specifications:

ITEM INFORMATION			ELECTRICAL DATA				DIMENSIONAL DATA			
	CATALOG NO.	UPC	VOLTS	WATTS	AMPS	BTU/HR.	HEIGHT	WIDTH	DEPTH	SHIP WT.
◆	BRH402	098319862006	240/208	4000/3000	16.7/14.1	13,650/10,238	11″	10 ½″	9 ⅝″	17 lbs
◆	BRH562*	098319862020	240/208	5600/4200	23.3/20.2	19,110/14,333	12″	11 ⅜″	10 ¾″	19 lbs

SKU Legend: ◆ **= Popular Products** ● **= Extended Offering** (Contact your local Marley Sales Representative for typically associated lead times)
NOTE: Includes fan-only function. Plug type for BRH402 is 20 Amp, 240V NEMA #6-20P. Plug type for BRH562 is 30 Amp, 240V NEMA #6-30P.

Scan the QR code to access additional specs and features.

For more information visit MarleyMEP.com/Products/Portable-Heaters

QMARK A Marley Engineered Products Brand

rev: Aug 2026

FHP SERIES
Portable Electric Hydronic Heater



This hydronic baseboard heater provides **long-lasting comfort** on cold nights. This 120-volt, plug-in portable baseboard model uses liquid-element technology to provide **warm, gentle heat** at a lower surface temperature, so it's safe to use around pets and small children. This UL-listed hydronic heater **prevents overheating**, thanks to its thermal cutoff switch.

Key Features:

Use Right Out of the Box
Start heating immediately. This portable hydronic baseboard heater comes equipped with a standard 120-volt plug, so you can quickly add it to any room that needs extra warmth.

Cooler to the Touch
This baseboard model provides worry-free heating around pets and kids thanks to its hydronic design.

Never Hear a Ping
This convection heater starts up and stops without the disruptive popping or pinging sounds given off by traditional baseboard models.

Circulate Heat, Not Debris
Keep dust and other particles from circulating, thanks to this hydronic baseboard heater's fanless operation. With no blower or exhaust fan, allergens and dander won't be blowing around the room.

Optimum Efficiency
Keep the room comfortable and reduce unnecessary on/off cycles with up to 100% energy-efficient design.

Ideal Spaces:

Bedrooms
Living/Family Room
Kitchens
Basements
Offices
Conference Rooms
Lobbies
Waiting Rooms

c UL US

Beige

Models & Specifications:

ITEM INFORMATION			ELECTRICAL DATA				DIMENSIONAL DATA			
	CATALOG NO.	UPC	VOLTS	WATTS	AMPS	BTU/HR.	HEIGHT	WIDTH	DEPTH	SHIP WT.
◆	FHP1500T	685360160788	120	1500	12.5	5120	8 7⁄16″	58″	6″	19 lbs

SKU Legend: ◆ **= Popular Products** ● **= Extended Offering** (Contact your local Marley Sales Representative for typically associated lead times)

Scan the QR code to access additional specs and features.

For more information visit MarleyMEP.com/Products/Portable-Heaters

QMARK A Marley Engineered Products Brand

rev: Aug 2026

FBE SERIES
Portable Electric Convector Heater



For **uniform heat** in any room. The Portable Electric Convector Heater's variable wattage element provides comfort from floor to ceiling, without hot or cold spots, using **natural convection currents** to move warm air instead of a fan or blower. The unit's 120-volt plug allows you to use it in almost any room, and the built-in thermostat provides effective control. Its **low-profile design** means you can tuck it away without worrying about overheating, thanks to its **automatic thermal cutoff** function.

Key Features:

Use Right Out of the Box
Start heating immediately. This portable baseboard heater comes equipped with a standard 120-volt plug, so you can quickly add it to any room for extra warmth.

Circulate Heat, Not Debris
Keep dust and other particles from circulating, thanks to this hydronic baseboard heater's fanless operation. With no blower or exhaust fan, allergens and dander won't be blowing around the room.

Optimum Efficiency
For maximum efficiency, the unit converts all incoming electric energy into heat, according to Department of Energy standards.

Safe Operation
For worry-free warmth, the unit's overheat protection feature prevents the heater from running when its air intake is blocked.

Keep Cozy
This baseboard heater installs unobtrusively in bedrooms, bathrooms, living rooms and dens, thanks to its low-profile design.

Ideal Spaces:

Bedrooms
Living/Family Room
Kitchens
Basements
Offices
Conference Rooms
Lobbies
Waiting Rooms

White

Models & Specifications:

ITEM INFORMATION			ELECTRICAL DATA				DIMENSIONAL DATA			
	CATALOG NO.	UPC	VOLTS	WATTS	AMPS	BTU/HR.	HEIGHT	WIDTH	DEPTH	SHIP WT.
◆	FBE10001	685360175331	120	1000	8.4	3414	7 ½"	45"	5 ³¹⁄₃₂"	11 lbs

SKU Legend: ◆ **= Popular Products** ● **= Extended Offering** (Contact your local Marley Sales Representative for typically associated lead times)

Scan the QR code to access additional specs and features.

For more information visit MarleyMEP.com/Products/Portable-Heaters

rev: Aug 2026

QTS SERIES
Toe Space Fan-Forced Heater



This electric toe kick heater installs under cabinets in kitchens, bathrooms, stairwells and more — providing **floor-level warmth** whenever you need it. Get quiet, even heat in a **slim design** that saves wall and floor space.

Key Features:

Hushed Heating
Keep warm without the noise, thanks to a compact, cross-flow blower that limits sound output while still delivering plenty of power.

Complete Control
Easily set your desired temperature with a remote wall-mounted thermostat or a built-in thermostat (select models only).

Heat Evenly
The steel-plate finned heating element is arranged in a uniform grid pattern for even heating and no wasted energy

Models & Specifications:

	ITEM INFORMATION		ELECTRICAL DATA			
	CATALOG NO.	UPC	VOLTS	WATTS	AMPS	SHIP WT.
◆	QTS1100*	685360065380	120	1125/563	9.4/4.7	10 lbs
◆	QTS1104*	685360065397	240	1125/563	4.7/2.3	10 lbs
			208	844/422	4.1/2.0	
◆	QTS1500T**	685360065410	120	1500/750	12.5/6.3	11 lbs
◆	QTS1504T**	685360065434	240/208	1500/750	6.3/3.1	11 lbs
				1125/564	5.4/2.7	

SKU Legend: ◆ **= Popular Products** ● **= Extended Offering** (Contact your local Marley Sales Representative for typically associated lead times)
*Models require QTSTSP or remote wall-mounted thermostat. **Models shipped with single-pole thermostat installed. Add NW to catalog number for White (ex. QTS1100NW).
Note: Compatible with remote thermostats. Reference owners manual for additional detail.

Optional Accessories:

CATALOG NO.	UPC	DESCRIPTION	SHIP WT.
QTSAG	685360065328	Adapter Grille 3 ½" H x 23 ⅜" W	1 lbs
QTSTSP	685360065335	120–240V Thermostat Kit	1 lbs

Scan the QR code to access additional specs and features.

Technical Specifications:

Temp Range: 45°–85°F

Ideal Spaces:

Kitchens
Bathrooms
Offices
Small Stairwells
Small Waiting Rooms

Intertek

Black White

For more information visit MarleyMEP.com/Products/Portable-Heaters

rev: Aug 2026

FDI SERIES
Floor Drop-In Heater



For ground level comfort, choose a drop-in unit heater. These units are specifically designed to be placed into flooring for an **unobtrusive heating solution** that keeps building occupants warm without taking up extra space.

Key Features:

Minimize Disruption
Drop-in heaters operate quietly, so you can keep bedrooms, living rooms and offices warm without distracting fan noise.

Safe Operation
These drop-in heaters come equipped with standard overheat protection for longterm peace of mind. The unit shuts down if it gets too hot, preventing unsafe conditions.

Ready to Connect
Included push-on tabs allow the wiring terminals of this heater to connect with ease for rapid installation and easy maintenance, even for multiple heating units.

Durability by Design
The heavy duty steel grille features a baked enamel finish for extra protection from scuffs, scratches and environmental corrosion.

Technical Specifications:

Temp Range: 55°–90°F
CFM: 80

Ideal Spaces:

Vestibules & Hallways
Bathrooms & Bedrooms

Intertek

Charcoal

Models & Specifications:

ITEM INFORMATION			ELECTRICAL DATA				
	CATALOG NO.	UPC	CFM	VOLTS	WATTS	AMPS	SHIP WT.
◆	FDI1500	685360026268	80	120	1500/750	12.5/6.3	10 lbs
◆	FDI1504	685360026282	80	240	1500/750	6.3/3.1	10 lbs
			80	208	1125/562	5.4/2.7	

SKU Legend: ◆ **= Popular Products** ● **= Extended Offering** (Contact your local Marley Sales Representative for typically associated lead times)

NOTE: 60 Hz single-phase. Do not install in bathroom or other areas where water may enter heater unit. Do not locate where air flow may be obstructed (under drapes, behind doors, etc.). Keep short side 36 in. min. and long side 3 in. min. from side walls. Do not install in ceiling or wall.

Optional Accessories:

CATALOG NO.	UPC	DESCRIPTION	SHIP WT.
FDITSP	685360026190	120-240V Thermostat Kit	1

Scan the QR code to access additional specs and features.

For more information visit MarleyMEP.com/Products/Portable-Heaters

QMARK A Marley Engineered Products Brand

rev: Aug 2026

MEDH SERIES
Portable Dragon Heater



Product is ready to use right out of the box and has been newly redesigned to be more **sleek and compact**. Provides high heat output while maintaining the ability to be **moved wherever you need it**.

Key Features:

Always Ready To Go
Compact design with robust air filled tires and included plug and cord kit make this heater easy to use right out of the box.

Quick and Easy Setup
Redesigned control compartment adds more space and easy access to internals for fast installation and maintenance.

Safer than the Competition
Can be left unattended without threat of poisoning from combustion by-products associated with fuel-fired heaters. Fan only mode allows for air recirculation, fume exhaust or fresh air supply.

Flexible Comfort Control
Designed with built-in thermostat and safety thermal cutout, thermostat selector switch, and optional ceiling/wall bracket to heat exactly how you need.

Ideal Spaces:

Construction Sites
Food Processing
Textile Mills & Paper Mills
Printing Plants & Chemical Plants
Truck Docks
Marinas

Intertek

Red

Scan the QR code to access additional specs and features.

rev: Aug 2026

MEDH SERIES
Portable Dragon Heater

Models & Specifications:

	ITEM INFORMATION		ELECTRICAL DATA					DIMENSIONAL DATA			
	CATALOG NO.	UPC	VOLTS	PHASE	KW	BTU/HR.	AMPS	HEIGHT	WIDTH	DEPTH	SHIP WT.
●	MEDH1021CKA	685360152585	240	1	10	34,120	41.7	40″	30″	24″	65 lbs
●	MEDH1583CKA	685360152257	208	3	15	51,180	41.8	40″	30″	24″	65 lbs
●	MEDH1521A	685360152196	240	1	15	51,180	62.5	40″	30″	24″	65 lbs
●	MEDH1523A	685360152219	240	3	15	51,180	36.3	40″	30″	24″	65 lbs
●	MEDH1543CKA	685360152233	480	3	15	51,180	18.6	40″	30″	24″	65 lbs
●	MEDH3043A	685360152271	480	3	30	102,360	36.3	40″	30″	24″	75 lbs

SKU Legend: ◆ **= Popular Products** ● **= Extended Offering** (Contact your local Marley Sales Representative for typically associated lead times)

NOTE: CK models include the appropriate wire and plug sets

Optional Accessories:

CATALOG NO.	UPC	KW	DESCRIPTION	SHIP WT.
DHCWM	685360152127	-	Ceiling and wall bracket can be used on all models	20 lbs

Optional Cord & Plug Kits:

CATALOG NO.	KW	VOLTS	PHASE	AMPS	WIRE SIZE	25 FOOT CORD	LOCKING	NON-LOCKING	SHIP WT.
MEDH1021A	10	240	1	39.6	6/3	SCS10063 (10ft.)	—	Included	18 lbs
MEDH1583A	15	208	3	41.8	6/4	SCS25064	LPS25064	—	20 lbs
MEDH1521A	15	240	1	62.5	4/3	SCS25043	—	—	22 lbs
MEDH1523A	15	240	3	36.3	6/4	SCS25064	LPS25064	NPS1550	20 lbs
MEDH1543A	15	480	1	31.2	6/4	SCS25064	LPS25064	NPS1550	20 lbs
			3	18.1	12/4	SCS25124	LPS25104	—	10 lbs
MEDH3043A	30	480	3	36.3	6/4	SCS25064	—	—	20 lbs

NOTE: Models designated 1 and 3 phase can be field-wired for single-phase operation.

QMARK® A Marley Engineered Products Brand

rev: Aug 2026

MSDH SERIES
High-Temp Dragon Heater



Most powerful portable electric heater around. This heater is designed for when you need a lot of **heat fast** without the need for refueling

Key Features:

Heavy Duty Heat

High BTU per hour output, powder-coated, corrosion-resistant 20-gauge steel housing, 10 in. pneumatic wheels, and a 4 in. locking caster make for a robust and long lasting heater you can take anywhere.

Heat Where you Need It

Adjustable damper accessory controls outlet temperature, 1 HP motor with adjustable pulleys allowing for adjustable fan speeds, and inlet and outlet flexible duct accessories available for ducting up to 165 ft.

Quick and Easy Setup

Control compartment on outside of unit allows for easy access to internals and fast installation and maintenance.

Safer than the Competition

Can be left unattended without threat of poisoning from combustion by-products associated with fuel-fired heaters. Fan only mode allows for air recirculation, fume exhaust or fresh air supply.

Ideal Spaces:

Construction Sites
Food Processing
Textile Mills
Paper Mills
Printing Plants
Chemical Plants
Truck Docks
Marinas

Red

Scan the QR code to access additional specs and features.

For more information visit MarleyMEP.com/Products/Portable-Heaters

rev: Aug 2026

MSDH SERIES
High-Temp Dragon Heater

Models & Specifications:

	ITEM INFORMATION		ELECTRICAL DATA				DIMENSIONAL DATA			
	CATALOG NO.	UPC	VOLTS (3-PHASE)	KW	BTU/HR.	AMPS	HEIGHT	WIDTH	DEPTH	SHIP WT.
●	MSDH3043	685360149134	480	30	102,363	37.2	44″	25 ⅜″	38 ½″	150 lbs
●	MSDH3093	685360149141	600	30	102,363	30	44″	25 ⅜″	38 ½″	150 lbs
●	MSDH4843	685360149172	480	48	163,781	58.9	44″	25 ⅜″	38 ½″	160 lbs
●	MSDH4893	685360149189	600	48	163,781	47.3	44″	25 ⅜″	38 ½″	170 lbs
●	MSDH6043	685360149219	480	60	204,727	73.3	44″	25 ⅜″	38 ½″	170 lbs
●	MSDH6093	685360149226	600	60	204,727	58.9	44″	25 ⅜″	38 ½″	170 lbs

SKU Legend: ◆ **= Popular Products** ● **= Extended Offering** (Contact your local Marley Sales Representative for typically associated lead times)
NOTE: Heater materials are not CSA Listed

Optional Accessories:

CATALOG NO.	UPC	DESCRIPTION	SHIP WT.
MSDHFX20	685360150727	20 in. Diameter Flexible Duct (25 feet)	45 lbs
MSDHDA20	685360150765	20 in. Diameter Adaptor Ring	20 lbs
MSDHSK20	685360150741	20 in. Diameter Splice Kit	40 lbs
MSDHDC	685360150789	20 in. Diameter Duct Clamp	3 lbs
MSDHAD	685360150802	Adjustable Damper	12 lbs

Cut heating & cooling bills by as much as 30%*

Looking to keep it cool in a gymnasium, factory, outdoor mall or industrial building? Look no further than our ceiling fans.



With a durable, contoured blade design, these fans are built for temperature control. Industrial and commercial ceiling fans provide an economic solutions for keeping air moving.



* Based on an ASHRAE "Saving Heating Costs in Warehouses" study.

IHD SERIES
Industrial High-Efficiency Ceiling Fan

18 Pole 115V; motor. Permanently sealed double-ball bearing motor. ⅜" x 7 ¼" locking J-hook for installation White epoxy finish (unless noted otherwise). Steel blades. Designed for winter heat destratification and summer cooling. Supplied with 24" downrod.

Models & Specifications:

	CATALOG NO.		UPC	FAN TYPE	VOLTAGE	FAN SIZE (WIDTH)	CFM/ WATTS	CFM	WATTS	EYEC**
	FAN & CONTROLLER KIT	FAN ONLY								
◆	56001HPK	56001HP	685360174464	High Performance Industrial	120	56"	102	6561	64.3	$18.00
◆	56001HP-BRN-K	56001HP-BRN	685360174488		120	56"	102	6561	64.3	$18.00
◆	56007HPK	56007HP	685360174563		277	56"	85.3	8959	105	$20.00
◆	60001HPK	60001HP	685360174501		120	60"	86.5	6090	70.4	$18.00
◆	60001HP-BRN-K	60001HP-BRN	685360174525		120	60"	86.5	6090	70.4	$18.00

SKU Legend: ◆ **= Popular Products;** ● **= Extended Offering**
(Contact your local Marley Sales Representative for typically associated lead times)
All products with the suffix "K" include a speed control. 12005 is used for 120V applications and 27708 is used for 277V applications. All above products include 24" downrod.
*Effective amount of air volume moved past a plane 20ft. from fan. All specifications subject to change and improvement.

Optional Accessories:

CATALOG NO	DESCRIPTION	SHIP WT.
9D24BW	Downrod 24" - White	2 lbs
9D36BW	Downrod 36" - White	2 lbs
9D48BW	Downrod 48" - White	2 lbs

NOTE: For Brown Downrods, replace "BW" with "BB" (i.e. 9D24BW or 9D24BB)

Secondary Control Options for New Construction Applications:

					Model Fan and Quantity per Control		
CATALOG NO	DESCRIPTION	VOLTAGE	AMPERAGE	SHIP WT.	*56001HP	56007HP	*60001HP
12005	Speed Control	120	5	2 lbs	5	10	4
12006	Speed Control	120	6	2 lbs	6	12	5
12012A	Speed Control	120	12	2 lbs	10	—	8
27708	Speed Control	277/120	8	2 lbs	—	6	—

*56001HP-BRN and 60001HP-BRN also available.
Before purchasing this appliance, read important information about it's estimated annual energy consumption, yearly operating cost, or energy efficiency rating that is available from your retailer at MarleyMEP.com/Resource-Library

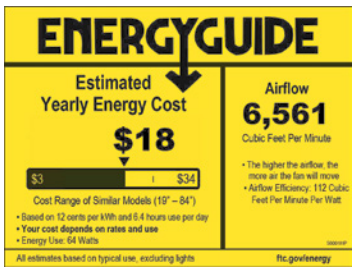

56001HP

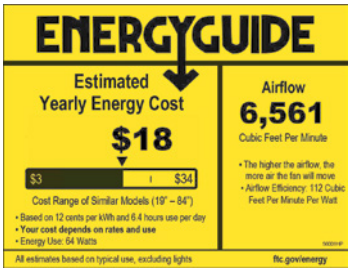

60001HP

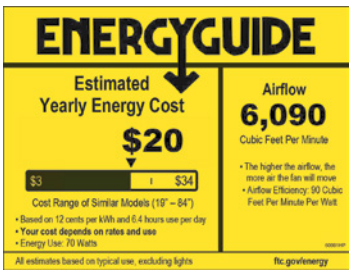

56007HP



Scan the QR code to access additional specs and features.

CHD SERIES
Commercial High-Efficiency Ceiling Fan

18 Pole 115V; reversible motor. Permanently sealed double-ball bearing motor. ⅜" x 7 ¼" locking J-hook for installation. White epoxy finish. Steel blades. Provides superior air velocity and efficiency.

Models & Specifications:

	CATALOG NO.		UPC	FAN TYPE	VOLTAGE	FAN SIZE (WIDTH)	CFM/ WATTS	CFM	WATTS	EYEC**
	FAN & CONTROLLER KIT	FAN ONLY								
◆	36201K	36201C	685360173788	High Efficiency	120	36"	64.0	2126	33.2	$9.30
◆	48201K	48201C	685360173801	High Efficiency	120	48"	85.6	3861	45.1	$12.60
◆	56001LCCK*	56001LCC*	685360173702	High Efficiency/Low Ceilings	120	56"	87.8	4952	56.4	$15.80
◆	56201CLSK*	56201CLS*	685360174556	High Efficiency/Low Speed	120	56"	81.0	5436	67.1	$18.80

SKU Legend: ◆ = Popular Products ● = Extended Offering

Note: All above products include 24" downrod, except for the 56201 model which comes standard with a 16" downrod. All products with the suffx "K" include the CTL12004RSPD reversible speed control. *Effective amount of air volume moved past a plane 20ft. from fan. All specifications subject to change and improvement. ** Estimated Yearly Energy Cost based on ENERGY GUIDE standards

Optional Accessories:

CATALOG NO	DESCRIPTION	SHIP WT.
9D12BW	Downrod 12" — White	2 lbs
9D24BW	Downrod 24" — White	2 lbs
9D36BW	Downrod 36" — White	2 lbs
9D48BW	Downrod 48" — White	2 lbs
CTL12004RSPD	Controller—Reversible & Speed Control, 4 Fans, 120v	1 lbs

NOTE: For Brown Downrods, replace "BW" with "BB" (i.e. 9D24BW or 9D24BB)

Secondary Control Options for New Construction Applications:

					Model Fan and Quantity per Control			
CATALOG NO	DESCRIPTION	VOLTAGE	AMPERAGE	SHIP WT.	36201C	48201C	56001LCC	56201CLS
12005	Speed Control	120	5	2 lbs	3	2	2	2
12006	Speed Control	120	6	2 lbs	7	5	5	5
12012A	Speed Control	120	12	2 lbs	12	10	10	—

NOTE: Choosing a secondary control removes the ability for fan to be used in reverse. If speed control and reversibility are needed please use the CTL12004RSPD

Before purchasing this appliance, read important information about it's estimated annual energy consumption, yearly operating cost, or energy efficiency rating that is available from your retailer at MarleyMEP.com/Resource-Library



Control your comfort with easy-to-use features and money-saving controls

Wall thermostats are a snap to install and easy to program for convenient and smart energy savings.

M601W / M602W

Best Sellers | Easy Installation and Control | Great Low Cost Solution



MD26



CNTLTSTDNP1H1C2

Advanced Comfort Control
Sleek and Modern Design
Accurate Low Voltage Solution



LTR2240

Direct Low Voltage Control for High Amp Loads
Allows for BMS Integration
Microprocessor Base Design







SMARTSERIES® PLUS
Digital Touchscreen Control



SmartSeries Plus is the first digital touchscreen control capable of running a **fully programmable internal schedule** as well as having the capability to **connect to a BACnet Building Management System**.

Key Features:

Intelligent Controls for Intelligent Buildings
This control comes ready to connect to your Building Management System using BACnet MS/TP protocol.

Reduced Operations & Maintenance Time
BMS saves facility manager time and personnel cost by eliminating the need to travel to the heater site and inspect and diagnose root cause.

Control at your Fingertips
Without a BMS you can still get heat when and where you need it by using the built in 7 day programmable scheduling feature. With the Occupancy Settings, you can quickly schedule different temperatures for multiple periods per day.

Lockable Key Pad
Protects the unit from unauthorized access and/or tampering giving you peace of mind the heater is running correctly.

Temperature Override
Control your comfort even further by allowing users to set a temperature above programmed setpoints for up to 4 hours in an unoccupied state.

Scan the QR code to access additional specs and features.

Featured Compatible Products

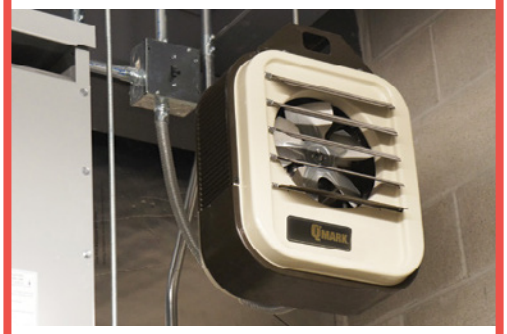

MUH & MUH-PRO



CUS900

For more information visit MarleyMEP.com/Products/Thermostats-Controls

rev: Aug 2026

Product Compatibility Matrix

✚ = Compatible

▲ = See SKU Compatibility Chart

☎ = Contact MEP

		2500 [1]	QMKC [1]	HBB	COS-E [4]	SED	GFR	QTS [6]	CDF [7]	EFF [7]	QCH [7]	MUH [8]	IUH [8]	CUS900	MSPH	CONVECTORS [8]	RCC	CP	FRP	FRS	Thermazone	OTHER RADIANT
Electronic Digital Line Voltage	TL823 0A1003/U	✚	✚	✚	▲	▲	▲									☎	✚	✚	☎	☎		☎
	TH108PLUSA	✚	✚	✚	▲	▲	▲									☎	✚	✚	☎	☎		☎
	TH106A	✚	✚	✚	▲	▲	▲									☎	✚	✚	☎	☎		☎
	TH114A240DBA	✚	✚	✚	▲	▲	▲									☎	✚	✚	☎	☎		☎
Electronic Digital Low Voltage [5]	CNTLTSTDNP1H1C2	☎	☎	☎					▲			✚		✚	✚	☎	☎	☎	☎	☎		☎
	CNTLSSPBMS								▲			✚		✚	✚							
	TH5220D1029								▲			✚		✚	✚	☎			☎	☎		☎
Mechanical: Manual Temperature Control	MS26	✚	✚	✚	▲	▲	▲	✚	▲	▲	▲	☎	☎			☎	✚	✚	☎	☎		☎
	MD26	✚	✚	✚	▲	▲	▲	✚				☎	☎			☎	✚	✚	☎	☎		☎
	M601W	✚	✚	✚	▲	▲	▲	✚	▲	▲	▲	☎	☎	✚	✚	☎	✚	✚	☎	☎		☎
	M601TPW	✚	✚	✚	▲	▲	▲	✚	▲	▲	▲	☎	☎	✚	✚	☎	✚	✚	☎	☎		☎
	M602W	✚	✚	✚	▲	▲	▲	✚				☎	☎			☎	✚	✚	☎	☎		☎
	M602TPW	✚	✚	✚	▲	▲	▲	✚				☎	☎			☎	✚	✚	☎	☎		☎
	M611W	✚	✚	✚	▲	▲	▲	✚	▲	▲	▲	☎	☎	✚	✚	☎	✚	✚	☎	☎		☎
	M612W	✚	✚	✚	▲	▲	▲	✚				☎	☎			☎	✚	✚	☎	☎		☎
	M600S*											☎										
	M600MTP*											☎										
Specialty/Industrial	WT11A								✚	✚	✚	☎	☎	✚	✚	☎		✚	☎	☎		☎
	WT12A											☎	☎			☎		✚	☎	☎		☎
	WR80	✚	✚	✚					✚	✚	✚	☎	☎	✚	✚	☎	✚	✚	☎	☎		☎
	JC80EP											☎	☎			☎			☎	☎		☎
	TZ-HUB																				☎	
	TZ-PCT																				✚	
	TZ-REMOTE																				☎	
	TZ-REM-PT																				✚	
	TZ-TIMER																		✚	✚	✚	
	TZ-TIMER2HR																		✚	✚	✚	
	TZ-SWITCH																				☎	

1 Electronic thermostats have amperage minimums and each model has different voltage requirements, please check catalog thermostat specifications.

4 Series models require the removal of the internal thermostat from unit. Wire wall thermostat for proper fan operation. See model selection for specific thermostats.

5 Low voltage thermostats operate in conjunction with low voltage control systems using relays. Compatible with all standard 24V two wire thermostats.

6 The QTS watt units can use either single-pole or double-pole thermostats. The 1104 and 1504 watt units must use a double-pole thermostat. (three conductors from thermostat to unit). Does not apply to low voltage thermostats, which need a transformer.

7 CDF and EFF Series models require different thermostats based on internal wiring. Wire wall thermostat for proper fan operation. See model selection for specific thermostats. Can not use digital thermostats with this unit.

8 Due to the complexity of wiring variations for remote wall thermostats with these products, we recommend that you contact Technical Services for assistance.

SKU Compatibility Chart

HEATER	THERMOSTAT
GFR1500T2F	TH106A, M601W, M611W, MS26
GFR2004T2F	TL8230A1003/U, TH106A, TH108PLUSA, M602W, M612W, MD26
GFR2404T2F	TL8230A1003/U, TH106A, TH108PLUSA, M602W, M612W, MD26
COS-E Series	TH106A, M601W, M611W, WR651
SED Series	TH106A, M601W, M611W, WR651
CDF548	MS26, M601W
CDF542	MS26, M601W
CDF547	MS26, M601W
CDF558	MS26, M601W
CDF552	MS26, M601W
CDF557	MS26, M601W
EFF1500	MS26, M601W
EFF3007	MS26, M601W
EFF4008	MS26, M601W
EFF4004	MS26, M601W
EFF4007	MS26, M601W
EFF4804	MS26, M601W
EFF4807	MS26, M601W
EFF3003	M601W, M611W
EFF3006	M601W, M611W
EFF4003	M601W, M611W
EFF4006	M601W, M611W
EFF4803	M601W, M611W
EFF4806	M601W, M611W
EFF48483	M601W, M611W
EFF48483LV	M601W, M611W
QCH1101F	M601W, MS26
QCH1151F	M601W, MS26
QCH1202F	M601W, MS26
QCH1207F	M601W, MS26

NOTE: Programmable thermostats cannot be used with the models listed above.

Thermostats
ELECTRONIC DIGITAL LINE VOLTAGE






	TH108PLUSA	TH114A240DBA	TH106A	TL8230A1003/U
Action	Triac: Silent Operation	Electronic Switch	Triac: Silent Operation	Microprocessor
Type	12.5A Resistive 2-wire SPST	15 A Resistive 4-wire DPST	16.7A Resistive 2-wire SPST	16.7 A Resistive 4-wire DPST
Watt Rating	Minimum: 2-amp load	No minimum load	Minimum: 2-amp load	No minimum load
120v	n/a	n/a	2000 watts	n/a
208v	n/a	n/a	n/a	3120 watts
240v	3000 watts	3600 watts	4000 watts	3600 watts
277v	n/a	n/a	n/a	n/a
Pilot Duty	No	No	No	No
Temp. Range (°F)	40°F to 85°F	40°F to 85°F	40°F to 85°F	40°F to 85°F
Differential	Accuracy: Within +/- 0.27°F	Accuracy: Within 1°F of setpoint	Accuracy: Within +/- 0.27°F	Accuracy: Within 1°F of setpoint
Features	Digital, non-programmable 12.5amp model delivers exceptional accuracy. Ideal for radiant ceiling panels and baseboard. Not for fan-forced heaters.	Digital, non-programmable model delivers exceptional accuracy. Ideal for radiant ceiling panels and baseboard. Can be used for fan-forced heaters.	Digital, programmable high capacity model delivers exceptional accuracy. Ideal for radiant ceiling panels and baseboard. Can be used for fan-forced heaters and resistive loads.	Digital, programmable model delivers exceptional accuracy. Ideal for radiant ceiling panels and baseboard. Can be used for fan-forced heaters.

ELECTRONIC DIGITAL LOW VOLTAGE

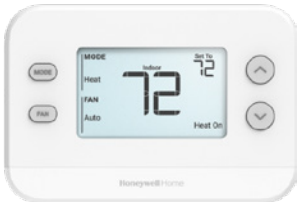



	CNTLTSTDNP1H1C2	TH5220D1029	CNTLSSPBMS
Action	Electronic Switch	Electronic Switch	Electronic Switch
Type	24V 0.02–1.0A @ 30V 2-wire	24V .015–1.0A @ 30V 5-wire	24V .015–1.0A @ 30V 3-wire
Watt Rating	—	—	—
120v	n/a	n/a	n/a
208v	n/a	n/a	n/a
240v	n/a	n/a	n/a
277v	n/a	n/a	n/a
Pilot Duty	24VAC	24VAC	24VAC
Temp. Range (°F)	32°F to 90°F	40°F to 90°F	40°F to 90°F
Differential	Within 0°–5°F of setpoint	Accuracy: Within 1°F of set	Accuracy: Within 1°F of setpoint
Features	Digital, Non-Programmable 24V delivers exceptional accuracy. (Heat Only)	Digital, Non-Programmable, 24V 2-stage 5-7 wire heat and cool thermostat. One-touch temperature control with exceptional accuracy. Ideal for plenum heaters, and HVAC systems.	Digital, Programmable touchscreen two stage thermostat runs 2/3 elements on stage 1 and full heat for stage 2. Comes with BACnet MS/TP BMS compatibility, 7 day scheduling, cooling mode (Fan-Only), temporary override, vacation mode, and keypad lock.

rev: Aug 2026

Thermostats
LINE/LOW VOLTAGE






	MS26	MD26	M601W	M602W	M601TPW	M602TPW	M611W	M612W
Action	Snap Action		Snap Action		Snap Action		Snap Action	
Type	SPST	DPST	SPST	DPST	SPST	DPST	SPST	DPST
Watt Rating	Model MD26 has Positive OFF		Model M602W has Positive OFF		Model M602TPW has Positive OFF		Model M612W has Positive OFF	
120v	22A		22A		22A		22A	
208v	22A		22A		22A		22A	
240v	22A		22A		22A		22A	
277v	18A		18A		18A		18A	
Pilot Duty	No		Yes 125VA		Yes 125VA		Yes 125VA	
Temp. Range (°F)	50°F to 80°F		45°F to 75°F		45°F to 75°F		45°F to 75°F	
Differential	+/- 5°F		+/- 4°F		+/- 4°F		+/- 2 ½°F	
Features	These economy thermostats are the snap action type that are used in apartment construction. Good thermostat for its value. Ideal for radiant cove heaters and baseboard.		These bi-metal snap-action thermostats are sensitive. Large knob allow for easy adjustment.		Same as M601W and M602W except the cover mounting cover offer tamper-proof feature.		Built-in heat anticipator assures closer control of room temperature.	





	M600MTP	M600S	901-1006998
Action	Modulation (2-stage)	Simultaneous switching (double ckt)	Bimetal
Type	DPST		SPST
Watt Rating			—
120v	22A	22A	N/A
208v	22A	22A	N/A
240v	22A	22A	N/A
277v	18A	18A	N/A
Pilot Duty	Yes 125VA	Yes 125VA	30VA at 30V max
Temp. Range (°F)	45°F to 75°F	50°F to 80°F	50°F to 90°F
Differential	Accuracy: Within 3°F of setpoint	Accuracy: Within 3°F of setpoint	Accuracy:+/-3°F of setpoint
Features	One thermostat controls two separate heating circuits and reduces input during light load periods. Second stage activates when temperature drops to approx. 1 ½°F below the first stage turn-ON temperature.	Simultaneous control of two heating loads. Used where the total load slightly exceeds capacity of a single switch, where two thermostats are impractical. Both switches are calibrated to operate at approx. the same temperature.	This mechanical, low voltage, non-programmable, single-stage thermostat operates with a slide switch for easy adjustment

QMARK A Marley Engineered Products Brand
rev: Aug 2026

Controls
SPECIALTY CONTROLS









	WR80	JC80EP	WT11A	WT12A*	LTR SERIES
Action	Snap Action Switch	Snap Action Switch	Positive snap action switch		Electronic Transformer Relay
Type	SPST	SPST	SPDT	DPST	Microprocessor base design
Watt Rating			NEMA 4X rated		These electronic relays have been designed for silent control of high voltage resistive loads from a low voltage control circuit. Inductive motor loads can also be controlled (120V to 240V only). Compatible with 24V thermostats. LTR1120: 120V; 22A LTR208240: 208V/240V; 22A LTR1277: 277V; 19A
120v	25A	22A	25A		
208v	22A	22A	25A		
240v	22A	22A	25A		
277v	18A	22A	22A		
Pilot Duty	Yes 125VA	Yes 125VA	Yes 125VA		
Temp. Range (°F)	20°F to 80°F	20°F to 80°F	40°F to 110°F	40°F to 100°F	
Differential	+/- 3°F	+/- 3.5°F	+/- 3°F		
Features	Rugged design for garages, factories, warehouses and similar commercial and industrial installations. The WR80 can control several heaters by using an external contractor.	This explosion proof room thermostat is suitable for Class 1, Group D and Class II, Groups E, F, and G locations.	Nema 4X weatherproof enclosure. The control has a SPDT output and can be used for heating or cooling (ventilation) Multi-positional mounting offers flexibility in new or existing installations. *WT12A model is for heating only.		The relays can be used with model LT186F01 electronic room sensor, providing proportional and integral control. Also can be tied to building management systems.







	LTR2240	TC1	M600THW	M600THB
Action	Dual Silent Transformer Relay	Enclosure protection for thermostats.	White thermostat cover with built-in thermometer. For M600 Series.	Beige thermostat cover with built-in thermometer. For M600 Series stats.
Type	(2) single pole switches	Material: Impact resistant polycarbonate. Clear. Dimensions are: 7" L x 4.28" H x 2.75" D		
Watt Rating	Resistive Inductive			
120v	N/A			
208v	25A 1HP, 8.8A	Thermostat enclosure kits are designed to protect the thermostat. Circulating slots allow airflow for proper operation. Guards are lockable and a key is provided to maintain security.		
240v	25A 1HP, 8A			
277v	N/A			
Pilot Duty	Yes 125VA		Minimum 50pcs. Allow 4 weeks.	
Temp. Range (°F)	20°F to 140°F			
Differential	+/- 1.5°F			
Features	This dual level temperature relay may be used to operate two separate heating loads by means of a single low voltage thermostat. Relay is mounted in an enclosure.			

QMARK A Marley Engineered Products Brand
rev: Aug 2026

Expand the boundaries of what's possible

with made-to-order products from Marley!

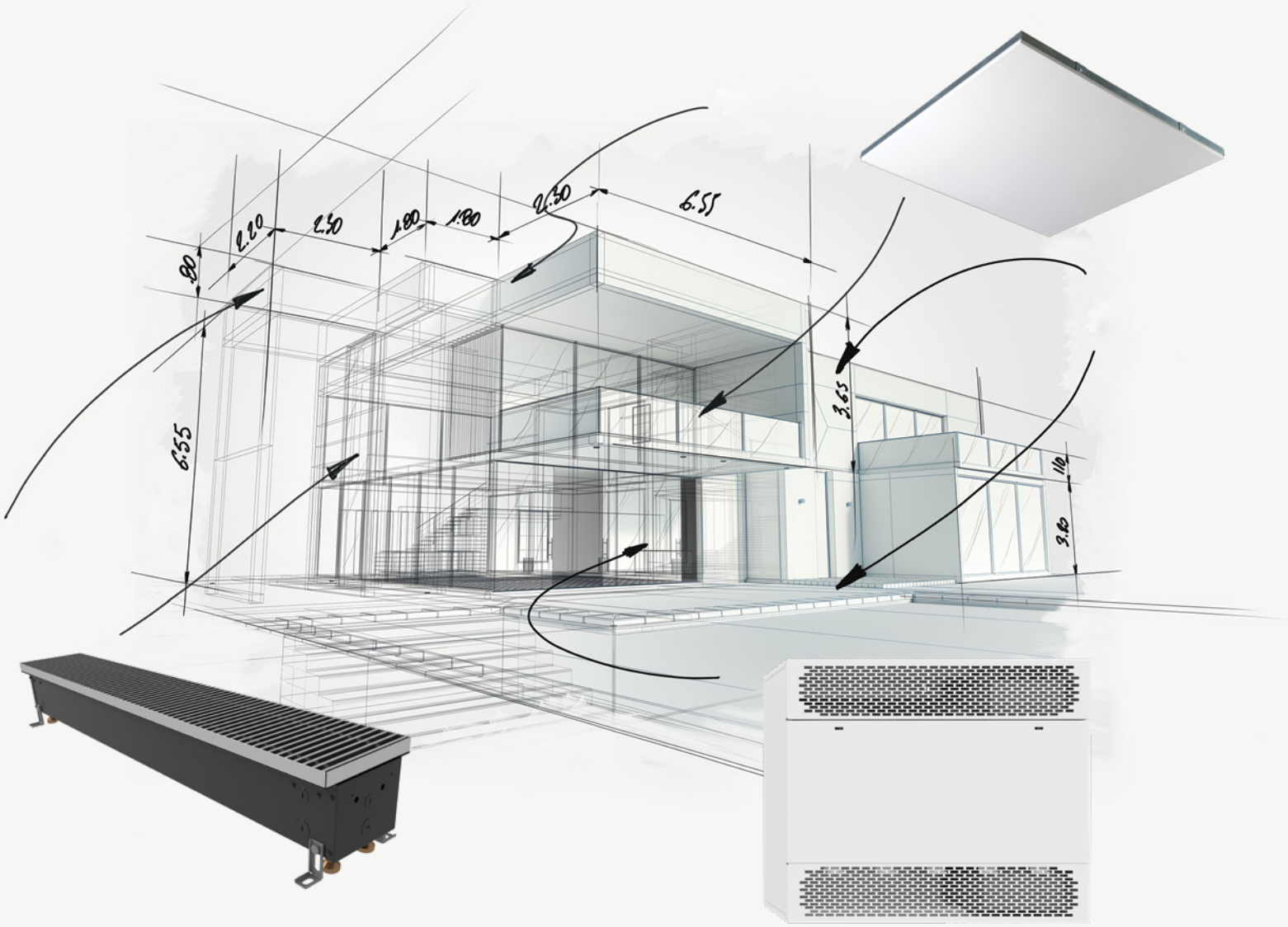

In addition to a full line of stock products, Marley has the custom capabilities to achieve your unique vision.

Backed by decades of design, engineering and manufacturing experience

let us show you the next generation of electric heat.



Turn Your Unique Vision **Into Reality**

MARLEY MADE-TO-ORDER PRODUCTS

Made to Order products offer varying sizes and output levels to give you more control. These products combine depth of configurability with the ease of ordering directly from our catalog.

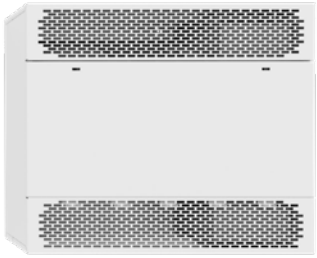

MULTIPLE SIZES & OUTPUTS
Fit your space &
heating needs



COMPLETE CONTROL
Thermostats, switches,
BMS compatibility



ANY PAINT, ANY PATTERN
Custom finishing &
paint matching

Tackle Your Toughest Heating Projects with Marley Engineered Products

Custom Capabilities Team

We integrate custom comfort solutions tailored to your design and performance needs so your team can spend valuable time on other aspects of the project. Whether your space is residential, commercial or industrial, we answer the challenge with unmatched technical expertise and a range of customized product solutions so you can complete the project with zero compromises.

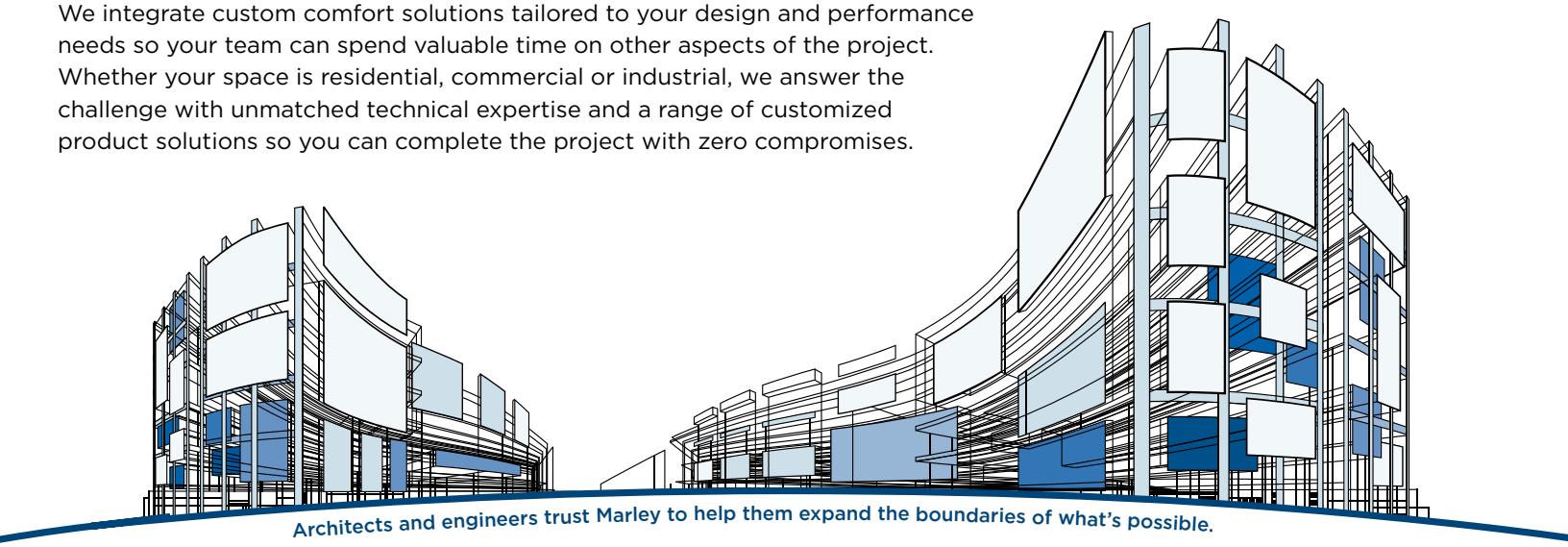

Architects and engineers trust Marley to help them expand the boundaries of what's possible.

TACKLE YOUR TOUGHEST HEATING PROBLEMS

Start your custom project at CustomHeatSolutions.com

CDF SERIES
Made-to-Order Commercial Downflow Ceiling Heater



Now compatible with SmartSeries® Plus!

Technical Specifications:

Temp Range: 45°–90°F | **CFM**: 300
Grille Gauge: 20

White Beige

kW		*Voltages*			*Phase*	
2/3/4	*2.5/3.8/5*	208	240	277	Single	Three

Optional Accessories – Electronic / Control Options:

CATALOG NO.	UPC	DESCRIPTION	SHIP WT.
CDFT	685360015033	Integral thermostat SPST — Range 45 to 95°F	1 lbs
CDF24R	685360015071	Relay (Time Delay 45–60 sec. to close when energized) requires 24V supply from remote source	1 lbs
CDFR12	685360015002	Relay (Time Delay 45–60 sec. to close when energized) requires 120V supply from remote source	1 lbs
CDFDS_R	685360174952	Recessed Mount Power Disconnect Switch (3-Pole) 30 amps, 600 volts, 3Ø, 60 Hz	1 lbs
CDFDS_S	685360174945	Surface Mount Power Disconnect Switch (3-Pole) 30 amps, 600 volts, 3Ø, 60 Hz	1 lbs
CDFTR4	685360015057	208/240V Primary Transformer/24V sec. and 24V holding coil control relay	1 lbs
CDFTR7	685360015064	277V Primary Transformer/24V sec. and 24V holding coil control relay	1 lbs

Optional Accessories – Mounting Options:

CATALOG NO.	UPC	DESCRIPTION	SHIP WT.
CDFSE	685360015019	Surface-mounted enclosure (Beige) — to be used With above heater section. 20" L x 16 ½" W x 5 ¾" D	10 lbs
CDFRE	685360014982	Recessed-mounted enclosure (Beige) — to be used With above heater section. 23 ¾" L x 23 ¾" W x 7" D	18 lbs
CDFSENW	685360149615	Surface-mounted White — to be used With above heater section. 20" L x 16 ½" W x 5 ¾" D	10 lbs
CDFRENW	685360149639	Recessed-mounted White — to be used With above heater section. 23 ¾" L x 23 ¾" W x 7" D	18 lbs
CDFTK	685360015040	Trim Ring for mounting on permanent ceiling (cannot be factory installed)	1 lbs
CDFRFK	685360171548	Mounting Bracket Retrofit Kit	2.5 lbs

NOTE: Factory-wired for highest wattage, field-convertible to lower wattages. Factory-wired 1-PH, field convertible to 3-PH dual-phase units, maximum amp draw is listed. Amperage shown is for single phase. For factory installation of above controls, additional charges apply.

*Optional Power Relays or Integral Thermostats cannot be used when the Transformer Relay Option is chosen

For easy BMS integration, heater, relay, and SmartSeries Plus are needed

Adjustable Airflow Options:

Wide Pattern
(24x8 ft. coverage) In standard ceiling applications (8–10 ft.), heater disperses the air to give a gentle, less pronounced pattern while circulating all the air from floor to ceiling.



Narrow Pattern
(8x8 ft. coverage) For high ceiling applications (11–14 ft.), fan concentrates the heated air to ensure full penetration to the floor level.



Asymmetrical Pattern
(17x10 ft. coverage) Heated air is directed in a specific direction, allowing the heater to be located where space allows, with the heated air delivered to where it is required.

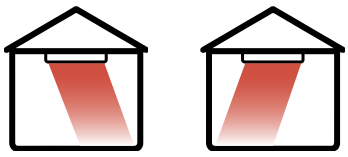

rev: Aug 2026

SmartSeries® Plus offers the ability to connect to a Building Management System using BACnet MS/TP. This means that once the product is mounted out of reach it can easily be controlled to meet you building needs.





Using a Building Management System allows you to monitor and control those units that are out-of-sight and out-of-mind. This saves time and money with no need to walk to each unit and verify they are running at the correct time.

Want this controller without the added time of configuration?
View the MUH Pro+ and CUS900-FFWD.

MUH-PRO+ Series
page 49

CUS900-FFWD
page 59

MUH SERIES
Made-to-Order Unit Heater



This **rugged** unit heater works well in industrial settings. Its **powerful output capacity** even makes it suitable for heating your loading dock or other indoor/outdoor transition spaces.

Dimensions and Clearances:

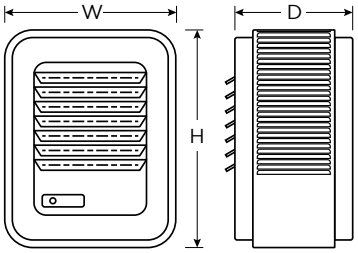

CATALOG NO.	HEIGHT	WIDTH	DEPTH
MUH03 & 05	16″	14″	7 ½″
MUH07 & 10	21 ¾″	19″	7 ½″
MUH15 & 20	21 ¾″	19″	12 ¾″
MUH25 & 30	30″	26 ⅝″	11 ¾″
MUH40 & 50	30″	26 ⅝″	17 ⅛″

Key Features:

Advanced Airflow
This unit heater's pull-through design draws air in across the heating element, so it runs cooler while providing an even blanket of comfort across its output range.

Safe Operation
A linear thermal cutout provides automatic protection the entire length of the heating element. Plus, most models feature a 24V control transformer for safer temperature adjustments.

Precise Positioning
The heater is equipped with individually adjustable louvers that aim your warmth where you need it most. A venturi outlet delivers the additional airflow you need to mount the unit vertically.

Three Times the Metal
The steel sheath heating element is clad in copper and outfitted with aluminum fins. This sophisticated design helps the heater run more safely and cool down faster.

Everything You Need for Installation
This unit heater doesn't require any piping flues, valves or traps. It's self-contained and ready to install wherever you need extra warmth.

Technical Specifications:

Temp Range: 40°–90°F
CFM: 350–3000

Ideal Spaces:

Factories
Warehouses
Garages
Stairwells
Shipping Docks
Power Stations
Mechanical Rooms

c UL us

Beige Bronze

Scan the QR code to access additional specs and features.

MUH SERIES
Made-to-Order Unit Heater Base Models

Models & Specifications:

	ITEM INFORMATION		ELECTRICAL DATA						AIR DELIVERY DATA FAN MOTOR DATA	
	CATALOG NO.	UPC	VOLTS	PHASE	KW	AMPS	BTU/HR.	CONTROL VOLT	CFM	SHIP WT.*
◆	MUH0381	685360047218	208	1	3	14.5	10	208	350	27 lbs
◆	MUH0581	685360047287	208	1-3	5	24	17	208	350	27 lbs
◆	MUH078	685360047355	208	1-3	7.5	36	26	24	650	38 lbs
◆	MUH108	685360047416	208	1-3	10	48	34	24	650	38 lbs
◆	MUH158	685360047454	208	1-3	15	72	51	24	910	53 lbs
◆	MUH0321	685360047164	208/240	1-3	2.2/3.0	11.0/12.5	8/10	208/240	350	27 lbs
◆	MUH0521	685360047225	208/240	1-3	3.7/5.0	18.0/21.0	13/17	208/240	350	27 lbs
◆	MUH072	685360047300	208/240	1-3	5.6/7.5	27.0/31.3	19/26	24	650	38 lbs
◆	MUH102	685360047362	208/240	1-3	7.5/10.0	36.0/42.0	26/34	24	650	38 lbs
◆	MUH152	685360047423	208/240	3	11.2/15.0	31.3/36.1	38/51	24	910	53 lbs
◆	MUH0371	685360047201	277	1	3	11	10	277	350	27 lbs
◆	MUH0571	685360047270	277	1	5	18	17	277	350	27 lbs
◆	MUH077	685360047348	277	1	7.5	27	26	24	650	38 lbs
◆	MUH0341	685360047188	480	3	3	3.6	10	24	350	27 lbs
◆	MUH0541	685360047256	480	3	5	6	17	24	350	27 lbs
◆	MUH074	685360047324	480	3	7.5	9	26	24	650	38 lbs
◆	MUH104	685360047386	480	3	10	12	34	24	650	38 lbs
◆	MUH154	685360047430	480	3	15	18	51	24	910	53 lbs
●	MUH208	685360047492	208	3	20	56	68	24	1320	60 lbs
●	MUH202	685360047461	208/240	3	15.0/20.0	41.2/48.0	51/68	24	1320	60 lbs
●	MUH204	685360047478	480	3	20	24	68	24	1320	60 lbs
●	MUH254	685360047515	480	3	25	30	85	24	2100	93 lbs
●	MUH304	685360047546	480	3	30	36	102	24	2100	93 lbs
●	MUH404	685360047614	480	3	40	48	137	24	3000	114 lbs
●	MUH504	685360047645	480	3	50	60.2	171	24	3000	114 lbs
●	MUH308	685360047560	208	3	30	84	102	24	2100	93 lbs
●	MUH252	685360047508	208/240	3	18.7/25.0	52.0/60.0	64/85	24	2100	93 lbs
●	MUH302	685360047539	208/240	3	22.5/30.0	63.0/72.3	77/102	24	2100	93 lbs
●	MUH402	685360047607	208/240	3	30.0/40.0	83.4/96.4	102/137	24	3000	114 lbs
●	MUH502	685360047638	208/240	3	37.5/50.0	104.2/120.4	128/171	24	3000	114 lbs
●	MUH107	685360047409	277	1	10	36	34	24	650	38 lbs
●	MUH073	685360047317	347	1	7.5	21.6	26	24	650	38 lbs
●	MUH103	685360047379	347	1	10	28.8	34	24	650	38 lbs
●	MUH0361	685360047195	600	3	3	2.9	10	24	350	27 lbs
●	MUH0561	685360047263	600	3	5	4.8	17	24	350	27 lbs
●	MUH076	685360047331	600	3	7.5	7.3	26	24	650	38 lbs
●	MUH106	685360047393	600	3	10	9.7	34	24	650	38 lbs
●	MUH156	685360047447	600	3	15	14.5	51	24	910	53 lbs
●	MUH206	685360047485	600	3	20	19.3	68	24	1320	60 lbs
●	MUH256	685360047522	600	3	25	24.2	85	24	2100	93 lbs
●	MUH306	685360047553	600	3	30	29	102	24	2100	93 lbs
●	MUH406	685360047621	600	3	40	38.7	137	24	3000	114 lbs
●	MUH506	685360047652	600	3	50	48.3	171	24	3000	114 lbs

SKU Legend: ◆ **= Popular Products** ● **= Extended Offering** (Contact your local Marley Sales Representative for typically associated lead times)

"1-3" phase denotes field convertible to 3-Phase

NOTE: All standard units are supplied with a low voltage control transformer and contactor (24V). Reference the appropriate Bundled Accessory table below for the standard accessories available out of the box with each PRO and PRO+ model.

MUH SERIES

Made-to-Order Unit Heater

Optional Field Installed and Factory Installed Accessories

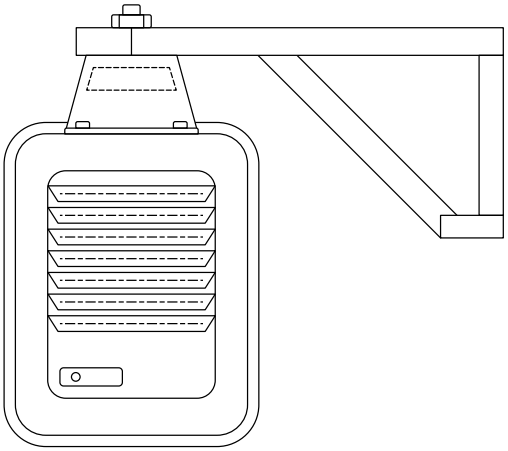

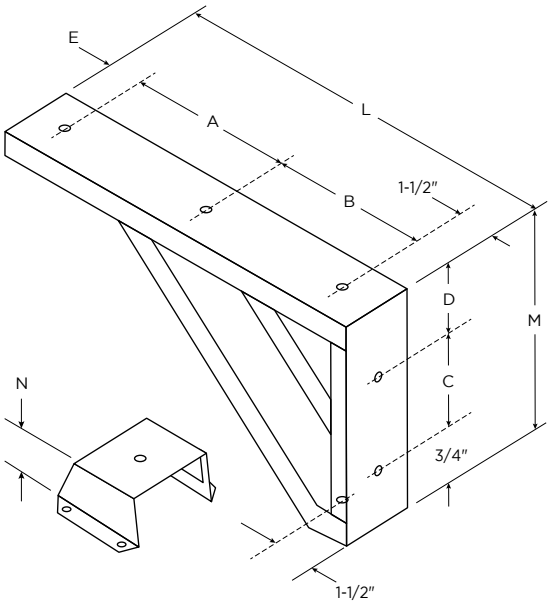

	3–20 kW	25–50 kW
A	7 ¼"	9 7⁄16"
B	9 ½"	14 ⅜"
C	7 ¼"	12 ⅛"
D	11 5⁄16"	2 1⁄16"
E	2 ¼"	3"
L	20 ½"	28 15⁄16"
M	9 15⁄16"	14 15⁄16"
N	3 ¼"	4 ½"

Optional Factory-Installed Controls & Accessories:

DESCRIPTION
MUH03 & 05 (208, 208/240, 277V Supply) 24 or 120V Control Transformer and Power Contactor 24 or 120V H.C. Power Contactor
MUH03 & 05 (480V Supply) & MUH07 through MUH50 Optional 120V Control
2-Stage Control of Elements
Manual Reset
Outlet Mesh (Bird Screen) For all MUH Heaters

NOTE: Any factory-installed options require added surcharge. See price book for charges or contact factory.

Optional Mounting Brackets:

	CATALOG NO.	UPC	COMPATIBILITY	SHIP WT.*
Standard	B10	685360152295	MUH03–10	8 lbs
	MCB105PK	685360173627	(Master Pack, Five B10 Brackets)	
	B20	685360152301	MUH15 & 20	10 lbs
	B30	685360152318	MUH25 & 30	13 lbs
	B50	685360152325	MUH40 & 50	15 lbs
Ceiling	CMB10	685360152363	MUH03–10	3 lbs
	CMB20	685360152370	MUH15 & 20	4 lbs
	CMB30	685360152387	MUH25 & 30	5 lbs
	CMB50	685360152394	MUH40 &50	6 lbs
Vertical Ceiling	VDMB5	685360152462	MUH03–05	5 lbs
	VDMB20	685360152455	MUH07–20	7 lbs
	VDMB50	685360152479	MUH25–50	9 lbs
Remote Tstats	MUHBKT-TST-SM	685360175089	MUH 3–20kw	2 lbs
	MUHBKT-TST-L	685360175096	MUH 25-50kw	2 lbs

MOUNTING LIMITATIONS: Unit heaters should not be used in potentially explosive atmospheres. The finish is not intended for direct salt spray exposure in marine applications or the highly corrosive atmospheres of swimming pools, chemical storage bins, etc. Do not install unit heaters above recommended maximum mounting height. Obstructions must not block unit heater air inlet or discharge. Heaters must be mounted at least 7 ft. above the floor to prevent accidental contact with the heating element or fan blade which could cause injury.

Optional Dust Shields:

CATALOG NO.	UPC	COMPATIBILITY	SHIP WT.*
JRDS8	685360150697	3–5 KW units	5 lbs
JRDS14	685360150673	15–20 KW units	6 lbs
JRDS19	685360150680	25–50 KW units	10 lbs

Optional Field-Installed Electrical Controls:

CATALOG NO.	UPC	DESCRIPTION	ELECTRICAL RATING
UHMT1*	685360152417	Single Pole Internal Thermostat-Temp Range: 40°– 85°F	25A @ 120, 240VAC Res. 22A @ 277VAC Res.
UHMT2	685360152424	Two Stage Internal Thermostat-Temp. Range: 40°–85°F	25A @ 120, 240VAC Res. 22A @ 277VAC Res. 125VA
MCFS	685360046372	Internal Summer Fan Switch 250, 480, 600V.A.C. 1,2 OR 3 PH	Pilot Duty 6A, 600VAC Res. 2 HP
MRFS1	685360047089	Remote Summer Fan Switch (Line Voltage)	2 HP, 250-480VAC
MRFS2	685360047096	Remote Summer Fan Switch with Relay (24V Coil-Single Pole Normally Open)	6 AFL, 35 ALR, 250VAC, 60Hz. 3 AFL, 18 ALR, 480VAC, 60Hz
MHRT	685360046945	Heat Recovery Thermostat with Relay (24V Coil-Single Pole Normally Open) Hi — 120°F, Low — 60°F	6 AFL, 35 ALR, 250VAC, 60Hz 3 AFL, 18 ALR, 480VAC, 60Hz
MPDS25	685360047034	Power Disconnect Switch (3-Pole)	30A @ 600VAC, Res.
MPDS60	685360047041	Power Disconnect Switch (3-Pole)	80A @ 600VAC, Res.

*"-S" version available as a suitable alternative

NOTE: Any field installed options assembled in the factory require added surcharge. See price book for charges. MPDS60 disconnect switch is not suitable for field installation on 7.5kw and 10kw unit heaters. Visit website or contact your local representative for compatibility details.

Diffusers for Vertical Mounting:

No Diffuser:
No diffuser needed where a straight downflow air pattern is required. For maximum air throw, remove louvers. Any of three diffusers can be added to basic heater.

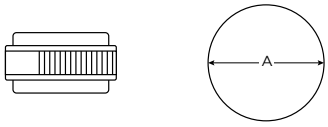

Louver Diffuser:
Permits directional (straight line) air flow as in air curtain application over doorways. Rectangular coverage, Louvers can be turned in either direction.

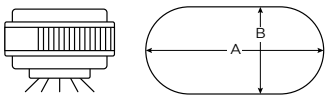

NOTE: Visit website or contact your local representative for additional details

Diffuser Selector Table:

CATALOG NO.	UPC	COMPATIBILITY	SHIP WT.*
MUHLDS	685360036656	Louvered Diffuser for 3 & 5KW Units	5 lbs
MUHLDM	685360036649	Louvered Diffuser for 7.5–20KW Units	8 lbs
MUHLDL	685360036632	Louvered Diffuser for 25–50KW Units	10 lbs

QMARK A Marley Engineered Products Brand
rev: Aug 2026

MUH-PRO SERIES
Bundled Unit Heater

Comfort, Convenience, and Connected

The MUH-PRO Series Unit Heaters are the same great MUH unit heater you rely on every day and now with bundle options to customize your comfort. Bundled options include our most popular safety and control accessories designed to make heating your space effortless and ordering a breeze.

Technical Specifications:

Temp Range: 40°–90°F | **CFM**: 350–3000

c UL us

Beige Bronze



Includes 24VAC Transformer for easy low voltage thermostat connection and future proofing

Includes disconnect switch for safe and easy maintenance or repair

Includes built-in single state thermostat for easy operation right out of the box

MUH-PRO+ Series also available!

Includes a SmartSeries® Plus thermostat and a B10 mounting bracket.

Scan the QR code to access additional specs and features.

NEW PRODUCT!

MUH-PRO SERIES
Bundled Unit Heater

Models & Specifications:

ITEM INFORMATION			ELECTRICAL DATA						AIR DELIVERY DATA FAN MOTOR DATA	
	CATALOG NO.	UPC	VOLTS	PHASE	KW	AMPS	BTU/HR.	CONTROL VOLT	CFM	SHIP WT.*
◆	MUH0381-PRO	685360173818	208	1	3	14.5	10	24	350	27 lbs
◆	MUH0381-PRO-SSP	685360174631	208	1	3	14.5	10	24	350	27 lbs
◆	MUH0581-PRO	685360173825	208	1-3	5	24	17	24	350	27 lbs
◆	MUH0581-PRO-SSP	685360174600	208	1-3	5	24	17	24	350	27 lbs
◆	MUH078-PRO	685360173832	208	1-3	7.5	36	26	24	650	38 lbs
◆	MUH078-PRO-SSP	685360174693	208	1-3	7.5	36	26	24	650	38 lbs
◆	MUH108-PRO	685360173849	208	1-3	10	48	34	24	650	38 lbs
◆	MUH108-PRO-SSP	685360174716	208	1-3	10	48	34	24	650	38 lbs
◆	MUH0321-PRO	685360173856	208/240	1	2.2/3.0	11.0/12.5	10	24	350	27 lbs
◆	MUH0321-PRO-SSP	685360174617	208/240	1	2.2/3.0	11.0/12.5	10	24	350	27 lbs
◆	MUH0521-PRO	685360173863	208/240	1-3	3.7/5.0	18.0/21.0	17	24	350	27 lbs
◆	MUH0521-PRO-SSP	685360174648	208/240	1-3	3.7/5.0	18.0/21.0	17	24	350	27 lbs
◆	MUH072-PRO	685360173870	208/240	1-3	5.6/7.5	27.0/31.3	26	24	650	38 lbs
◆	MUH072-PRO-SSP	685360174679	208/240	1-3	5.6/7.5	27.0/31.3	26	24	650	38 lbs
◆	MUH102-PRO	685360173887	208/240	1-3	7.5/10.0	36.0/42.0	34	24	650	38 lbs
◆	MUH102-PRO-SSP	685360174662	208/240	1-3	7.5/10.0	36.0/42.0	34	24	650	38 lbs
◆	MUH0341-PRO	685360173894	480	3	3	3.6	10	24	350	27 lbs
◆	MUH0341-PRO-SSP	685360174624	480	3	3	3.6	10	24	350	27 lbs
◆	MUH0541-PRO	685360173900	480	3	5	6	17	24	350	27 lbs
◆	MUH0541-PRO-SSP	685360174655	480	3	5	6	17	24	350	27 lbs
◆	MUH074-PRO	685360173917	480	3	7.5	9	26	24	650	38 lbs
◆	MUH074-PRO-SSP	685360174686	480	3	7.5	9	26	24	650	38 lbs
◆	MUH104-PRO	685360173924	480	3	10	12	34	24	650	38 lbs
◆	MUH104-PRO-SSP	685360174709	480	3	10	12	34	24	650	38 lbs

SKU Legend: ◆ **= Popular Products** ● **= Extended Offering** (Contact your local Marley Sales Representative for typically associated lead times)

"1-3" phase denotes field convertible to 3-Phase

NOTE: All standard units are supplied with a low voltage control transformer and contactor (24V). Reference the appropriate Bundled Accessory table below for the standard accessories available out of the box with each PRO and PRO+ model. Shipping weight includes mounting bracket

On dual-voltage units CFM, FPM, & RPM ratings are listed at higher voltage operation. On dual-phase units maximum amp draw is listed for respective voltage.

MUH-PRO SERIES
Bundled Unit Heater

MUH-Pro Bundled Accessories:

ACCESSORY	DESCRIPTION
24VAC Transformer	Takes incoming line voltage and drops it to low voltage (24VAC) to be used with low voltage thermostats.
Disconnect Switch	A three pole non-fused disconnect switch disconnects power to the heater. Design prevents entry into the control compartment until disconnect switch is turned to the OFF position.
Built-In Single Stage Thermostat	Built-in single stage thermostat with adjustable knob to have heater run until demand is satisfied.

MUH-Pro+ Bundled Accessories:

ACCESSORY	DESCRIPTION
24VAC Transformer	Takes incoming line voltage and drops it to low voltage (24VAC) to be used with low voltage thermostats.
Disconnect Switch	A three pole non-fused disconnect switch disconnects power to the heater. Design prevents entry into the control compartment until disconnect switch is turned to the OFF position.
SmartSeries® Plus thermostat	Remote Mount two stage thermostat runs 2/3 elements on stage 1 and full heat for stage 2. Fan cycles on high speed only. Comes with BACnet BMS compatibility, scheduling, cooling mode (Fan-Only), and keypad lock.
B10 mounting bracket	Used to easily mount the unit heater to the wall

Dimensions and Clearances:

CATALOG NO.	HEIGHT	WIDTH	DEPTH
MUH03 & 05	16″	14″	7 ½″
MUH07 & 10	21 ¾″	19″	7 ½″

	3–20 kW
A	7″
B	9 ½″
C	7 ¼″
D	11 5⁄16″
E	2 ¼″
L	20 ½″
M	9 15⁄16″
N	3 ¼″

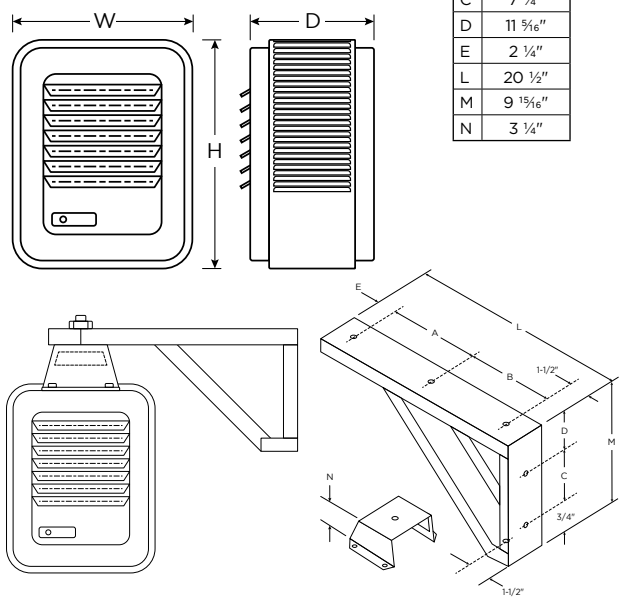

Optional Mounting Brackets:

	CATALOG NO.	UPC	COMPATIBILITY	SHIP WT.*
Standard	B10	685360152295	MUH03–10	8 lbs
Ceiling	CMB10	685360152363	MUH03–10	3 lbs
Vertical Ceiling	VDMB5	685360152455	MUH03–05	5 lbs
	VDMB20	685360152462	MUH07–20	7 lbs

Optional Dust Shields:

CATALOG NO.	UPC	COMPATIBILITY	SHIP WT.*
JRDS8	685360150697	3–10 KW units	5 lbs

MOUNTING LIMITATIONS: Unit heaters should not be used in potentially explosive atmospheres. The finish is not intended for direct salt spray exposure in marine applications or the highly corrosive atmospheres of swimming pools, chemical storage bins, etc. Do not install unit heaters above recommended maximum mounting height. Obstructions must not block unit heater air inlet or discharge. Heaters must be mounted at least 7 ft. above the floor to prevent accidental contact with the heating element or fan blade which could cause injury.

Diffuser Selector Tables for Vertical Mounting

CATALOG NO.	DESCRIPTION	COMPATIBILITY	MAX. MOUNTING HEIGHT	(A) DIMENSION	DIFFUSER PATTERN AND AREA
–	No Diffuser: No diffuser needed where a straight downflow air pattern is required. For maximum air throw, remove louvers. Any of three diffusers can be added to basic heater.	MUH03 & MUH05	9	18 (A)	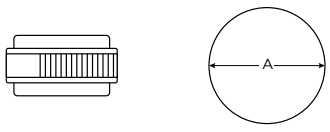
–		MUH07 & MUH10	14	26 (A)	
MLDS	Louver Diffuser: Permits directional (straight line) air flow as in air curtain application over doorways. Rectangular coverage, Louvers can be turned in either direction.	MUH03 & MUH05	9	25(A) 12(B)	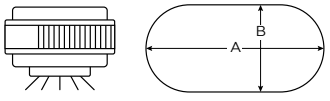
MLDM		MUH07 & MUH10	14	25(A) 12(B)	

QMARK A Marley Engineered Products Brand
rev: Aug 2026



COMFORT WITHOUT COMPROMISE

The contemporary aesthetics of this versatile Cabinet Unit Heater complement modern and future architect specifications. With multiple control options, comfort settings are easily monitored and controlled.





Want the most-common features without the added time of configuration?

View the stock CUS900-FFWD
on page 59

EASY INSTALL AND MAINTENANCE

- Hinged front panel enables one-person maintenance on ceiling applications
- Front cover interlock de-energizes unit when front cover is removed
- Disposable air filter mounted in inlet air stream

ROBUST DESIGN

- Heavy 16-gauge cold-rolled steel finished with a polyester powder coating provide strength and corrosion resistance
- Motors mounted with automatic thermal overload protection
- Two thermal safety cutouts automatically shut off and protect the heater in the event of overheating

CONTEMPORARY AESTHETICS

- Standard stamped grille with optional ducted grilles

QMARK A Marley Engineered Products Brand
rev: Aug 2026

CU900 SERIES
Made-to-Order Cabinet Unit Heater

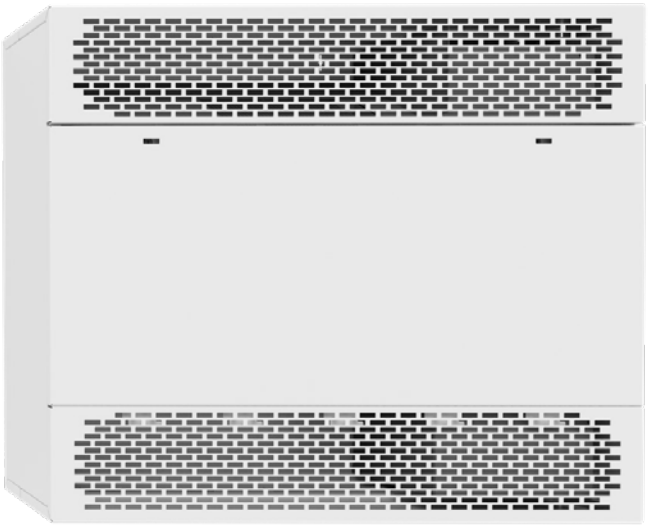

Most versatile heater with multiple sizes, wattages, and airflow options. Multiple control options give you the ability to control your comfort.

Technical Specifications:

Temp Range: 55°–85°F | **CFM**: 500–2,000 | 60 HZ

c UL us

White | Beige | Aluminum | Bronze | Black | Custom Colors

Custom Cabinet Unit Heaters: Models and Specifications

	SERIES	KW	BTU/HR.	FINAL AIR TEMP	CFM*	AMPERAGE						SHIP WT.
						208 | 1Ø	208 | 3Ø	240 | 1Ø	240 | 3Ø	277 | 1Ø	480 | 3Ø	
■	CU935 35 in. (L)	2	6,826	72° F	500	10	6	9	6	8	3	120 lbs
		3	10,239	78° F		15	9	13	8	12	4	
		4	13,652	84° F		20	12	17	10	15	6	
		5	17,065	90° F		25	15	22	13	19	7	
		6	20,478	96° F		30	17	26	15	22	8	
		7	23,891	102° F		34	20	30	18	26	9	
		8	27,304	108° F		39	23	34	20	30	10	
■	CU945 45 in. (L) 160 LBS.	4	13,652	72° F	1,000	20	12	18	11	16	6	160 lbs
		6	20,478	78° F		30	18	26	16	23	8	
		8	27,304	84° F		40	23	34	20	30	11	
		10	34,130	90° F		48	29	43	25	37	13	
		12	40,956	96° F		59	34	51	30	44	16	
		14	47,782	102° F		68	40	59	35	52	18	
		16	54,608	108° F		78	46	68	40	59	20	
■	CU968 68 in. (L) 260 LBS.	15	51,195	90° F	1,500	–	44	–	38	–	20	260 lbs
		21	71,673	102° F		–	60	–	52	–	27	
		24	81,912	108° F		–	69	–	60	–	31	
■	CU978 78 in. (L) 300 LBS.	20	68,260	90° F	2,000	–	58	–	50	–	26	300 lbs
		24	81,912	96° F		–	69	–	60	–	31	
		28	95,564	102° F		–	80	–	70	–	36	
		32	109,216	108° F		–	91	–	79	–	41	

SKU Legend: ■ **= Made to Order** (Contact your local Marley Sales Representative for typically associated lead times)

NOTE: RED numbers represent circuit breakers or fused disconnect required. **380V units will operate with a 16% reduction in heating capacity. +Based on 60°F inlet air temperature. *Values shown is high speed. All models operate at 60hz.

Scan the QR code to access additional specs and features.

NEW PRODUCT!

QMARK A Marley Engineered Products Brand

rev: Aug 2026

CU900 SERIES
Made-to-Order Cabinet Unit Heater

Optional Accessories:

CATALOG NO.	DESCRIPTION	COMPATIBLE WITH	FUNCTION	SHIP WT.
CU935RTK*	Ceiling or Wall Recess Trim Kit	CU935	Provides a neat finish to semi-recessed or full recessed application.	3 lbs
CU945RTK*		CU945		4 lbs
CU968RTK*		CU968		6 lbs
CU978RTK*		CU978		7 lbs
CU935BK*	Floor/Toe-Space Base Kit	CU935	16 gauge, muted black base is recessed from the heater front and sides to provide an attractive and practical floor mounting application.	9 lbs
CU945BK*		CU945		10 lbs
CU968BK*		CU968		13 lbs
CU978BK*		CU978		15 lbs
CU935WF	Permanent, Reusable Washable Filter	CU935	Replaces standard filter Washable filter can be cleaned and replaced.	4 lbs
CU945WF		CU945		6 lbs
CU968WF		CU968		10 lbs
CU978WF		CU978		12 lbs

*Add the appropriate color code suffix after the catalog number; (i.e. W for White, B for Black, etc.)

Suggested Controls



Now compatible with SmartSeries Plus when used with 24VAC control transformer!

Optional Factory-Installed Accessories:

ACCESSORY	DESCRIPTION	
	STANDARD	OPTIONAL
2-Stage Thermostat Built-or Remote	Built-in (or remote-mounted) single-pole, single-stage thermostat that cycles the element(s) and fan. Fan speed and element wattage selected by the built-in HIGH or LOW selector switch.	Built-in (or remote-mounted) two-stage thermostat that cycles 2/3 of the element for during first stage and full heat during second stage. Fan cycles on high speed only.
SmartSeries® Plus (Built-In -r Remote)	Built-in (or remote mounted) two stage thermostat runs 2/3 elements on stage 1 and full heat for stage 2. Fan cycles on high speed only. Comes with BACnet BMS compatibility, scheduling, cooling mode(Fan-Only), and keypad lock.	Supply terminal block in the control compartment.
Dead Front Disconnect Switch	A three pole non-fused disconnect switch disconnects power to the heater. Design prevents entry into the control compartment until disconnect switch is turned to the OFF position.	Supply terminal block in the control compartment.
Dead Front Fused Disconnect Switch†	A three pole non-fused disconnect switch and circuit breaker(s) sized to the heater load protects heater and disconnects power to the heater.	Design prevents entry into the control compartment until disconnect switch is turned to the OFF position.
On/Off Switch	No switch supplied.	Built-in switch provides continuous fan operation with or without heat, or automatic fan cycling as the heat cycles on and off.
Key Lock For Front Cover	Two (2) slotted head spring latches.	Two (2) toolhead key lock style spring latches prevent unauthorized adjustment of controls and provides additional safety from injury due to contact with internal components.
Inlet or Discharge Duct Collar(S)	Standard Architectural Grilles	Collars provide easy connection of field supplied duct work. We do not recommend exceeding 0.2 in. wg external static pressure. Heater with duct collars are supplied with a single speed high static motor.
Louver Grilles	Standard Architectural Grille.	Retrofit option to match the old louver design of the cabinet unit heater. This option is only available for both inlet a nd discharge openings ordered at the same time. Can not be ordered separately.

† Plus price of circuit breaker.

Multiple Air Flow Combinations:

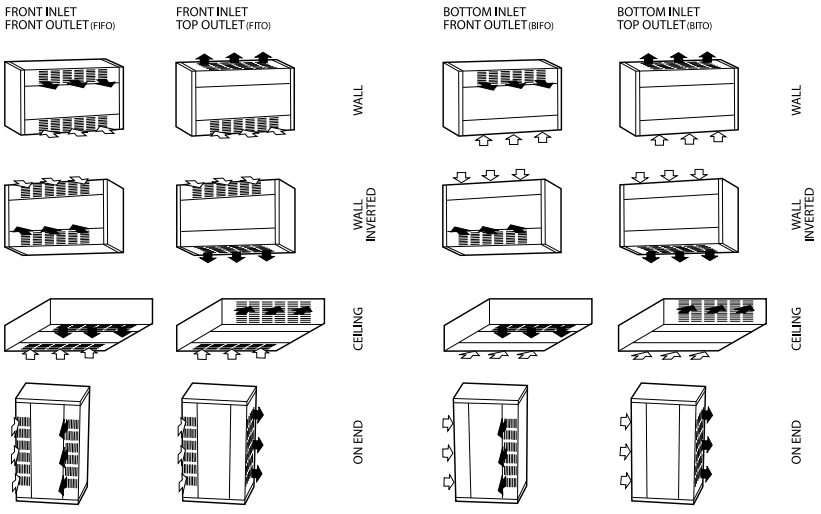

Dimensions and Clearances:

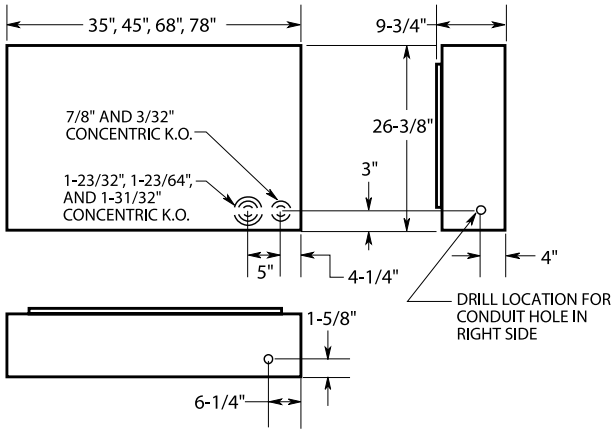

QMARK A Marley Engineered Products Brand
rev: Aug 2026

OPEN COIL ELECTRIC
Duct Heater

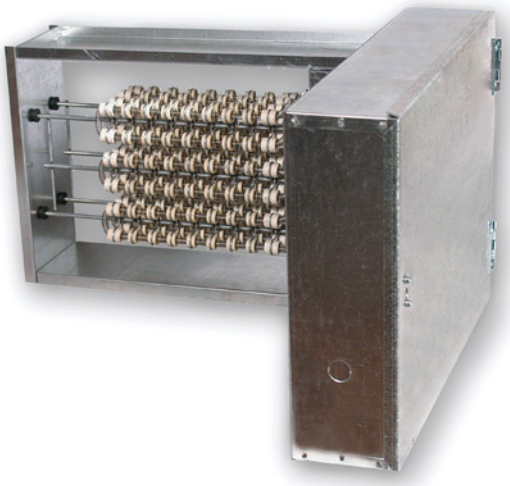



This heater is the epitome of out-of-sight out-of-mind comfort giving you a **boost of heat for any duct system**. The two models give you the flexibility to install in both **rectangular or round ducts** and the flip-able design allows it to be installed anywhere.

Key Features:

Flexible Design

Flip-Able design and wide range of available sizes and voltages offers complete flexibility when specifying a job.

Longer Lifetime and Less Nuisance Tripping

Elements come standard with a watt density of 30 kW/sqft and offered Derated Heating Coils improve heater element life and nuisance tripping.

Convenient Quoting

New easy to use online configurator saves time and money while getting you the exact product you need for your application.

Hidden Heat

UL and ETL approved for incorporation into the duct work so no new holes in the wall or ceiling and no bulky product visible in room.

Ideal Spaces:

Office Buildings
Retail Stores
Warehouses
Schools
Hotels
Hospitals

Stainless Steel

Scan the QR code to access additional specs and features.

NEW PRODUCT!

rev: Aug 2026

OPEN COIL ELECTRIC
Duct Heater

How to Order an Open Coil Electric Duct Heater

In almost every application, a duct heater needs to be highly configured and specialized to meet the demand of the space it is going in. To do this efficiently, we have created a new configuration process making it fast and easy to get the product you need. This page is designed to show you all the standard options available and how to decipher the part number to configure the specific heater you are ordering. (If there is a size larger or additional options needed, you will have to go through the Non-Standard Process for a quote.)

Open Coil Duct Heater Smart Part Number

Brand (1 plc)	Mounting (1 plc)	Element Style (1 plc)	Revision (1 plc)	kW (3 plc)	Supply Voltage/Phase (1 plc)	Insulation Thickness (in.) (2 plc)	Stages (2 plc)	Control Voltage (1 plc)	Width* (3 digits)	Height* (3 digits)
B (Berko)	**S** (Slip-In)	**C** (Open Coil)	**A**	**###** (001–100)	**1** = 120V 1 Ph	**00** = 0.0″	**01** = 1 Stage	**1** = 24V	**###** (006–120)	**###** (006–144)
					2 = 208V 1 Ph	**05** = 0.5″		**2** = 120		
					3 = 208V 3 PH	**10** = 1″	**02** = 2 Stage	**3** = 208	*For round Duct Heaters diameters are **006** = 6 inch **008** = 8 inch **010** = 10 inch	
	F (Flanged)				**4** = 240V 1 PH	**15** = 1.5″		**4** = 240		
Q (QMark)					**5** = 240V 3 PH	**20** = 2″		**5** = 277		
	R (Round Collar)				**6** = 277V 1 PH	**25** = 2.5″	**03** = 3 Stage	**6** = 480		
					7 = 480V 1 PH	**30** = 3″				
					8 = 480V 3 PH					

*For Round Duct Heaters diameters are 06 = 6 inch, 08 = 8 inch, and 010 = 10 inch

Control Options (11 plcs)

Heater Controls (1 plc)	Time Delay (1 plc)	Airflow Switch (1 plc)	Power Fusing (1 plc)	Disconnect Switch (1 plc)
0 = None	**0** = None	**0** = None	**0** = None	**0** = None
A (SCR)	**A** (Time Delay Relay, Heater On)	**A** (Airflow Switch, non-adjustable)	**A** (Power Fusing)	A (Disconnect Switch)
B (Step Controller, Analog Signal Required)				
C (Fan Interlock)	**B** (Time Delay Relay, Delay Between Stages)			
D (Heater Interlock, Disable/Enable Heater)	**C** (Time Delay Relay, Heater On & Delay Between Stages	**B** (Airflow Switch, adjustable		
E = SCR and Heater interlock				

Control Options (11 plcs) cont.

Control Transformer (1 plc)	Thermostat (1 plc)	Coil (1 plc)	Derated (1 plc)	Pilot Light (1 plc)	Control Box (1 plc)
0 = None	**0** = None	**0** = None	**0** = None	**0** = None	**0** = None
A (Control Transformer)	**A** (Thermostat, Wall Mount)	**A** (Stainless Steel Coil Terminals for Corrosion Resistance)	**A** (Derate to 35 Watts)	**A** (Pilot Light, Heater Power On)	**A** (Vapor Barrier)
B (Control Transformer & Primary Fusing)				**B** (Pilot Light, Heater Energized)	**B** (Dust Tight Box)
C (Control Transformer & Secondary Fusing)	**B** (Thermostat, with Remote Sensor)	**B** (80/20 Corrosion Resistant Wire)	**B** (Derate to 25 Watts)	**C** (Pilot Light, Stage On, 1 per stage)	**C** (Outdoor Rated)
D (Control Transformer & Secondary & Primary Fusing)	**C** (Thermostat, with Duct Sensor)	**C** (Stainless Steel Element Rack)		**D** (Pilot Light, Airflow Switch Open)	**D** (Dust Tight Box & Vapor Barrier)

Sample

Customer Order: Berko, Flanged, Open Coil, First Revision, 24 kW, 208V 3 PH, 1″, 1 Stage, 24V, 20″ Width, 14″ Height, SCR Heater Controls, No Time Delay, Non-Adjustable Airflow Switch, No Power Fusing, Disconnect Switch, Control Transformer & Primary Fusing, Thermostat, Wall Mount, No Coil, Pilot Light, Derate to 35 Watts, Heater Power On, No Control Box.

B	F	C	A	024	3	10	01	1	020	014	A	0	A	0	A	B	A	0	A	A	0

Notes: 1. Please see the installation instructions for installation details and restrictions. 2. For slip in heaters being installed into an internally insulated duct, decrease the height by 2 times the insulation thickness, decrease the width by the insulation thickness, and add a recess equal to the insulation thickness. 3. All heaters will require either a fan relay or an airflow switch per UL requirements. If neither is chosen, a fan relay will be specified.If both a fan relay and airflow switch are required, both must be specified as options/accessories.4. Power fusing is standard on all heaters above 48.0 amps. Power fusing must be specified as an option/accessory if required for heaters rated 48 amps or less.

Perimeter heat that promotes your vision

Convection heaters warm air at the base of exterior windows, creating a natural updraft that protects your building's heat envelope and curtain walls. Windows stay free of fog and condensation and warm air circulates throughout the space with no need for a fan or blower.

INCREASED OUTPUT, CONTROL OPTIONS, AND CUSTOM CAPABILITIES



SLQDB



DBSL



DBA

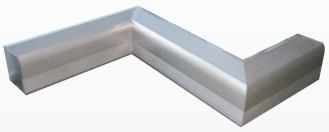

SHA



Did You Know?

We have a full complementing line of steel convectors available for applications that require a different construction, aesthetic, or layout.

Convectors create an **effective draft barrier** to minimize perimeter heat loss and prevent condensation against glazing, as well as add heat to offices, schools, lobbies or any space with large window spans or cold spots.

Quiet, Natural Airflow. Convectors do not require a fan or ducting, so they don't circulate dust and other allergens. They provide safe, easy-to-maintain source of heat with no moving parts.

Custom convectors are premium supplemental heat solutions that **won't compromise your buildings aesthetics**. These units can be ordered with any length, corner or trim option you need and are designed to your exact specifications for a fully integrated comfort solution.

Control Options. Add anything from a single-unit, built-in thermostat to a fully BMS-compatible silicon controlled rectifier to best command your building's heating system.



*Customizations not available for all products.

WHERE DESIGN AND COMFORT MEET

THX zero vertical profile eliminates visual disruptions while preserving the building's heat envelope and amplifying building aesthetics. Maximize building comfort and reclaim floor space with the most compact, in-floor convector on the market today.

Brought to you by Marley Engineered Products—a trusted leader in comfort solutions—THX is designed with durability in mind to withstand daily cleaning, water and debris.



Find out how you can incorporate THX into your next supplemental heating spec.
Visit **CustomHeatSolutions.com/THX-Trench-Heater** or contact your QMark representative.

QMARK
A Marley Engineered Products Brand

Rev: Aug 2026

THX™ SERIES
UL Listed In-Floor Perimeter Convection Heater

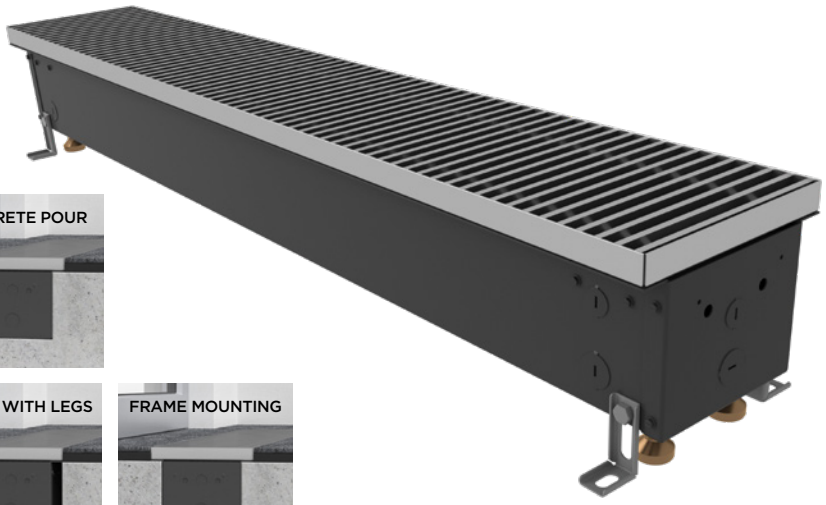



Where design and comfort meet. Maximize building comfort and reclaim floor space with THX. Its zero vertical profile **eliminates visual disruptions** while preserving the building's heat envelope and amplifying building aesthetics. From design to installation and servicing, the THX is built to be quickly and **easily installed and maintained** in order to provide the superior comfort solutions your client demands.

Key Features:

Easy extensibility
THX units come in 2- to 5-foot modular lengths for easy one-person handling and wiring when adding multiple units.

Easy Mounting
Listed for concrete pour, mounting with legs or using a frame. Included leveling legs raise the unit to the appropriate height for flush installations and optional mounting legs provide an additional securing point.

Rated for High Traffic Areas
THX units can support double the UL weight test rating—durable enough to stand up to foot traffic in busy spaces. These units are placed in the floor where they won't show dents and scratches as easily as other heaters

Easy Installation and Maintenance
All units are factory wired and preassembled for out-of-the-box readiness. drop-in installation, and easy access for cleaning and maintenance, with one service professional.

UL Listed Out-of-the-Box with Sealed J-Boxes
Avoid the time and expense of certifying on site. THX is designed with water and debris management in mind. It features a sealed junction box and raised connection points, plus a wire screen beneath the grille catches debris to prevent it from entering the unit.

Ideal Spaces:

Conference Rooms
Hallways
Lobbies
Offices
Retail Spaces
Floor-to-Ceiling Curtain Walls

c UL us

Conforms to ANSI/UL2021 and CSA C22.2, NO. 46

White | Black | Aluminum

Scan the QR code to access additional specs and features.

NEW PRODUCT!

QMARK A Marley Engineered Products Brand

rev: Aug 2026

THX™ SERIES
UL Listed In-Floor Perimeter Convection Heater

Models & Specifications:

	MODEL	LENGTH	WATTS PER FT*	TOTAL WATTS	AMPERAGE			# OF ELEMENTS	SHIP WEIGHT LBS.
					208 VAC	240 VAC	277 VAC		
■	THXQ 02188	2′	188	376 (1282)	1.8	1.6	1.4	1	30
■	THXQ 02250		250	500 (1705)	2.4	2.1	1.8		
■	THXQ 03188	3′	188	564 (1923)	2.7	2.4	2.0		40
■	THXQ 03250		250	750 (2558)	3.6	3.1	2.7		
■	THXQ 04188	4′	188	752 (2564)	3.6	3.1	2.7		52
■	THXQ 04250		250	1000 (3410)	4.8	4.2	3.6		
■	THXQ 05188	5′	188	940 (3205)	4.5	3.9	3.4		60
■	THXQ 05250		250	1250 (4263)	6.0	5.2	4.5		

SKU Legend: ■ **= Made to Order** (Contact your local Marley Sales Representative for typically associated lead times)
For all sizes above 5', the units can be modularized together. Reference instruction manual for additional detail. For additional output contact Marley's Technical Services.



THX warms air at the base of exterior windows, creating a natural updraft that protects your building's heat envelope and curtain walls.

Optional Built-In Controls:

SUFFIX*	OPTIONAL BUILT-IN CONTROL	USE CASE(S)	RATINGS & DESCRIPTION
DS	Power On/ Off Switch	Ideal for servicing	Double-pole, rated 20 amp @ 120–277 VAC. (See Note A) For three-phase heaters and single-phase heaters over 20 amps specify two.
TR	Transformer "Relay	Ideal for remote, low voltage thermostats	Single-pole, low voltage relay with built-in transformer (24 VAC control), rated 22 amps @ 120–240 VAC and 22 amps @ 277 VAC. (See note E) 17 amps @ 347V. Not available on three-phase heaters.
PR	Power Relay	Ideal for multiple heater connections or BMS / EMS connections	Single-pole thermal time delay relay, rated 25 amps @ 120–600 VAC. (See Notes E & F). Specify control voltage.

* Addition To Basic Catalog No. (See Note D) NOTE: Reference the submittal sheet or additional detail

Optional Accessories:

ACCESSORY	DESCRIPTION
Blank Sections	12", 18", 2', 3', 4', 5'
Corner Sections	90° (without grille)

FLUSH GRILLE DIMENSIONS

Size	2 ft.	3 ft.	4 ft.	5 ft.
Length	24⅛" (613mm)	36 ⅛" (918mm)	48 ⅛" (1,223mm)	60 ⅛" (1,528mm)
Grille Width	7 ⅞" (200mm)			
Cabinet Width	6 ⅛" (156mm)			
Depth	6 ⅛" (156mm)			
A – Diameter (Nested)	½" (¾")			
B – Diameter	½"			
Leveling Leg Adjustment	1–2" (26–52mm)			

SURFACE GRILLE DIMENSIONS

Size	2 ft.	3 ft.	4 ft.	5 ft.
Length	26 ⅛" (664mm)	38 ⅛" (969mm)	50 ⅛" (1,273mm)	62 ⅛" (1,578mm)
Grille Width	9 ⅞" (251mm)			
Cabinet Width	6 ⅛" (156mm)			
Depth	6 ⅛" (156mm)			
A – Diameter (Nested)	½" (¾")			
B – Diameter	½"			
Leveling Leg Adjustment	1–2" (26–52mm)			

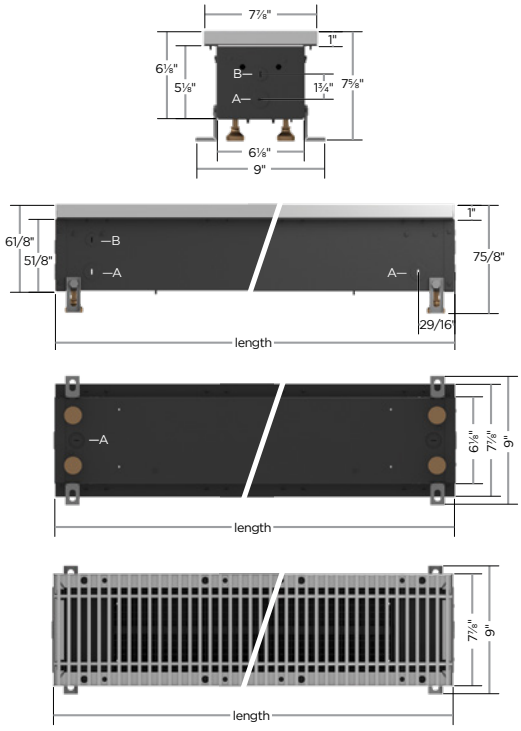

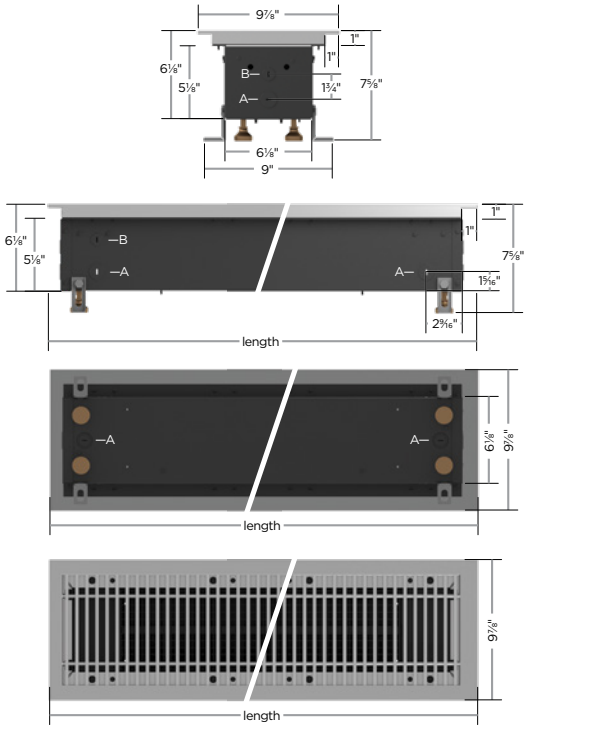

For more information visit MarleyMEP.com/Products/Convector-Heaters

QMARK A Marley Engineered Products Brand
rev: Aug 2026

DBA & SHA SERIES
Architectural Sill-Height Convector



Complement your architectural vision with these sill-height, extruded aluminum convectors. **Designed for simple installation, flexible output and control options, and easy customization**, these architectural convectors are the perfect choice to add heat and draft barrier protection to atriums, lobbies and other areas with floor-to-ceiling glass.

Key Features:

Ultimate Design Flexibility

The two available sizes provide ultimate flexibility and configurations to meet any requirements a space could need: from output, controllability, and aesthetics.

2-Piece Extruded Aluminum Construction

For rapid installation and easy maintenance, these extruded 12-gauge aluminum convectors feature a simple, two-piece design. The "Snap-Lock" closure allows you to easily secure the two pieces with no need for other fasteners.

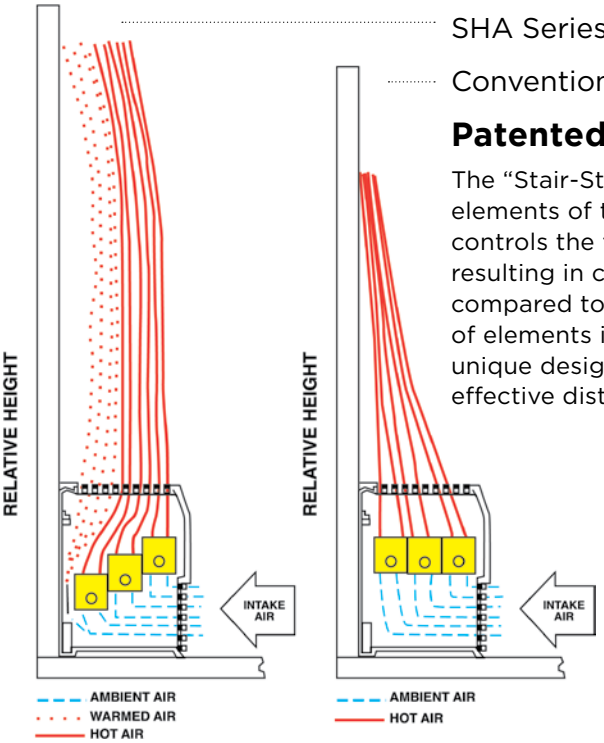

Patented Stair-Step Design

The "Stair-Step" patented design of heating elements of two- and three-element heaters controls the flow of air through the heater resulting in cooler wall temperatures compared to side-by-side arrangements of elements in conventional heaters. This unique design provides a more efficient and effective distribution of heat.

Scan the QR code to access additional specs and features.

Ideal Spaces:

Living Rooms
Bedrooms
Offices
Hallways & Lobbies
Condos
Conference Rooms;
Retail Spaces
Floor-to-Ceiling Curtain Walls

c UL us

White | Beige | Charcoal Grey

Bronze | Black | Aluminum

Custom and/or Anodized Colors also Available

QMARK A Marley Engineered Products Brand
rev: Aug 2026

DBA & SHA SERIES
Architectural Sill-Height Convector

DBA & SHA (1 Element) Lengths

Length	28″	3′	4′	5′	6′	7′	8′	9′	10′
Shipping Weight	8 lbs	10 lbs	13 lbs	17 lbs	20 lbs	24 lbs	27 lbs	30 lbs	33 lbs

NOTE: Custom length cabinets are priced with heater and blank to the next larger size. Backs are provided standard with no finish. For finished backs, add 10% to list price. Knockouts on back omitted by request only. All models are NON-STOCK made-to-order. When ordering, specify quantity, catalog number, voltage, wattage, optional controls, and color. Consult sales representative for lead times.

*Watts per Ft.**

100	125	150
188	250	

*Voltages**

120	208	240	277
480	347	600	

SHA (Multiple Elements) Lengths

Length	28″	3′	4′	5′	6′	7′	8′	9′	10′
Shipping Weight	12 lbs	15.5 lbs	20 lbs	25.5 lbs	30 lbs	35 lbs	40 lbs	45 lbs	50 lbs

NOTE: Cabinet available up to 12 ft. length. Custom length cabinets are priced with heater and blank to the next larger size. Backs are provided standard with no finish. For finished backs, add 10% to list price. Knockouts on back omitted by request only. All models are NON-STOCK made-to-order. When ordering, specify quantity, catalog number, voltage, wattage, optional controls, and color. Consult sales representative for lead times.

*Watts per Ft. — 2 Elements**

375	500

*Voltages — Single Phase**

208	240	277	347	600

*Watts per Ft. — 3 Elements **

600	750

*Voltages — Three Phase**

208	240	600

*Specs vary by length. Reference the submittal sheet or additional detail

Optional Built-In Controls:

SUFFIX*	OPTIONAL BUILT-IN CONTROL	RATINGS & DESCRIPTION
T	Single-Pole Thermostat	Rated 25 amps @ 120–240 VAC and 22 amps @ 277 VAC. Pilot duty rating of 125 VA (all voltages). 60–120°F temperature range; adjustable through outlet grille-tamper-resistant. (See Note B) Not available on three-phase heaters.
2T	Double-Pole Thermostat	Rated 25 amps @ 120–240 VAC and 22 amps @ 277 VAC. Pilot duty rating of 125 VA (all voltages). 60–120°F temperature range; adjustable through outlet grille-tamper-resistant. (See Note B for amperage restrictions.)
DS	Power On/Off Switch	Double-pole, rated 20 amp @ 120–277 VAC. (See Note A) For three-phase heaters and single-phase heaters over 20 amps specify two.
TR	Transformer Relay	Single-pole, low voltage relay with built-in transformer (24 VAC control), rated 22 amps @ 120–240 VAC and 22 amps @ 277 VAC. (See note E) 17 amps @ 347V. Not available on three-phase heaters.
PR	Power Relay	Single-pole thermal time delay relay, rated 25 amps @ 120–600 VAC. (See Notes E & F). Specify control voltage.
2ST	2-Stage Thermostat	Rated 24 amps @ 120–240 VAC and 22 amps @ 277 VAC. Pilot duty rating of 125 VA (all voltages). 60–120°F temperature range, adjustable through outlet grille-tamper-resistant. Available on 2- or 3-element, single-phase heaters only.
PDT	Single-Pole Thermostat	Same as -T except Pilot Duty. (See Note C)
2TPD	Double-Pole Thermostat	Same as -2T except Pilot Duty. (See Note C & D)
M	Outlet Mesh	Price per foot

NOTE: *Addition To Basic Catalog No. (See Note D)
A. For single-phase loads over 20A and all three-phase loads, specify (2) power on/off switches. **B**. This control option is not available on single-phase heaters over 25 amps (22 amps on 277 VAC). In combination with the power on/off switch option use the 2ST thermostat option on heaters over 20 amps. **C**. A second transformer relay can be sequenced off the first transformer relay in the same heater. Up to 30 power relays in different heaters can be controlled by (1) single-stage pilot duty thermostat. **D**. Up to 30 power relays in different heater can be controlled by each stage of a two-stage pilot duty thermostat. **E**. Two relays are required on single-phase heaters over 20 amps with a power on/off switch, over 25 amps without a power on/off and on all three-phase heaters. Two relays are available for two-stage on two- or three-element heaters only. **F**. Three power relays are available for three-stage on three-element heaters only. Reference Marley Catalog and Submittals for additional control option details.

Dimensions and Clearances:

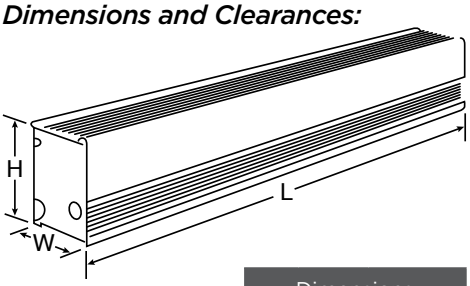

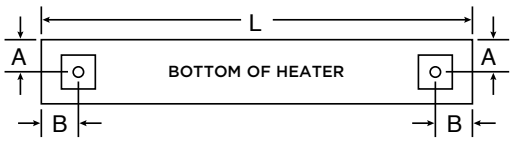

	Dimensions		
Cat. No.	H	W	L
DBA	6″	3 ⅝″	28″–12′
SHA	7″	5 ⅝″	28″–12′

	Standard Pedestal Placement	
Cat. No.	A	B
DBA	2″	2 ¼″
SHA	2 13⁄16″	2 ¼″

QMARK A Marley Engineered Products Brand
rev: Aug 2026

DBA & SHA SERIES
Architectural Sill-Height Convector

Blank Sections & Accessories — DBA Series:

CATALOG NO.	DIMENSIONS (W x H x L)	INLET	SHIP WT.
DBABS1F	3 ⅝" x 6" x 1'	Front	4 lbs
DBABS1B		Bottom	
DBABS2F	3 ⅝" x 6" x 28"	Front	7 lbs
DBABS2B		Bottom	
DBABS3F	3 ⅝" x 6" x 3'	Front	9 lbs
DBABS3B		Bottom	
DBABS4F	3 ⅝" x 6" x 4'	Front	12 lbs
DBABS4B		Bottom	
DBABS5F	3 ⅝" x 6" x 5'	Front	16 lbs
DBABS5B		Bottom	
DBABS6F	3 ⅝" x 6" x 6'	Front	19 lbs
DBABS6B		Bottom	
DBABS7F	3 ⅝" x 6" x 7'	Front	22 lbs
DBABS7B		Bottom	
DBABS8F	3 ⅝" x 6" x 8'	Front	24 lbs
DBABS8B		Bottom	
DBABS9F	3 ⅝" x 6" x 9'	Front	27 lbs
DBABS9B		Bottom	
DBABS10F	3 ⅝" x 6" x 10'	Front	30 lbs
DBABS10B		Bottom	

NOTE: Blank section grilles are not punched unless requested.

CATALOG NO.	DESCRIPTION	ADDITIONAL SPACE REQUIRED	SHIP WT.
DBAECLS**	End Cap w/Screws — Left	—	—
DBAECRS**	End Cap w/Screws — Right		
DBAICF**	Inside Corner-Front In	8 ½"	5 lbs
DBAICB**	Inside Corner-Bottom In	8 ½"	5 lbs
DBAOCF**	Outside Corner-Front In	5"	4 lbs
DBAOCB**	Outside Corner-Bottom In	5"	4 lbs
DBA135ICF**	135° Inside Corner-Front In	8 ½"	5 lbs
DBA135ICB**	135° Inside Corner-Bottom In	8 ½"	5 lbs
DBA135OCF**	135° Outside Corner-Front In	5"	4 lbs
DBA135OCB**	135° Outside Corner-Bottom In	5"	4 lbs
DBADESBL**	Dec. End Section-Bottom In, Left	9 ⁹⁄₆₄"	5 lbs
DBADESBR**	Dec. End Section-Bottom In, Right		5 lbs
DBADESFL**	Dec. End Section-Front In, Left		4 lbs
DBADESFR**	Dec. End Section-Front In, Right		4 lbs
DBASP**	Splice Plate	0–¼"	1 lbs
DBAFL3**	Filler Section 3 in.	0–3"	1 lbs
DBAFL6**	Filler Section 6 in.	3–6"	1 lbs
DBAFL9**	Filler Section 9 in.	6–9"	1 lbs
DBAFL12**	Filler Section 12 in.	9–12"	1 lbs
DBA-FL18**	Filler Section 18 in.	15–18"	1.5 lbs
DBADRF**	Receptacle Section-Front In	4 ½"	1.5 lbs
DBADRB**	Receptacle Section-Bottom In		
PK3S*	Standard Pedestal 2 ⅞ in. (H)	—	2 lbs
PK3A*	Architectural Pedestal 2 ⅞ in. (H)	—	2 lbs
SO1A***	Stand-Off Bracket	—	1 lbs

*One pedestal. Two required on units up to 10 ft., three required on units over 10ft.

**Add suffix -P for painted followed by the color code (i.e. W for White, B for Black, etc.), -C for clear anodized (excludes PK3S—Black only).

***All Stand-off Brackets come standard as Beige.

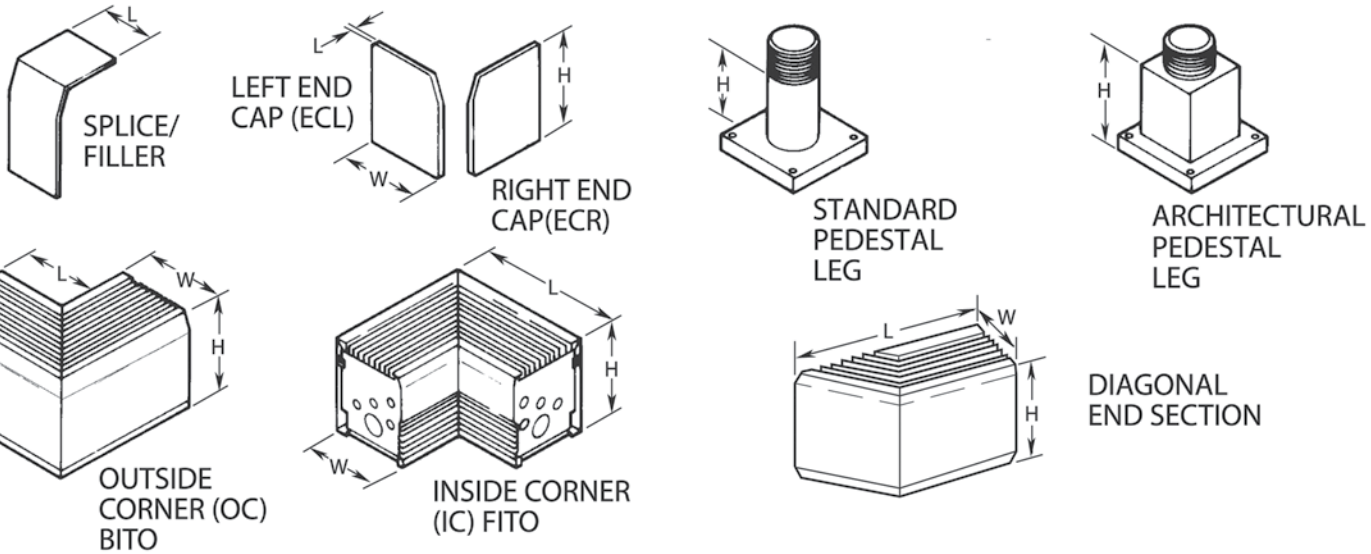

QMARK A Marley Engineered Products Brand
rev: Aug 2026

DBA & SHA SERIES
Architectural Sill-Height Convector

Blank Sections & Accessories — SHA Series:

CATALOG NO.	DIMENSIONS (W x H x L)	INLET	SHIP WT.
SHABS1F	5 ⅜" x 7" x 1'	Front	7 lbs
SHABS1B		Bottom	
SHABS2F	5 ⅜" x 7" x 28"	Front	11 lbs
SHABS2B		Bottom	
SHABS3F	5 ⅜" x 7" x 3'	Front	14 lbs
SHABS3B		Bottom	
SHABS4F	5 ⅜" x 7" x 4'	Front	18 lbs
SHABS4B		Bottom	
SHABS5F	5 ⅜" x 7" x 5'	Front	22 lbs
SHABS5B		Bottom	
SHABS6F	5 ⅜" x 7" x 6'	Front	27 lbs
SHABS6B		Bottom	
SHABS7F	5 ⅜" x 7" x 7'	Front	32 lbs
SHABS7B		Bottom	
SHABS8F	5 ⅜" x 7" x 8'	Front	37 lbs
SHABS8B		Bottom	
SHABS9F	5 ⅜" x 7" x 9'	Front	40 lbs
SHABS9B		Bottom	
SHABS10F	5 ⅜" x 7" x 10'	Front	44 lbs
SHABS10B		Bottom	

NOTE: Blank section grilles are not punched unless requested.

CATALOG NO.	DESCRIPTION	ADDITIONAL SPACE REQUIRED	SHIP WT.
SHAECLS**	End Cap w/Screws — Left	—	—
SHAECRS**	End Cap w/Screws — Right		
SHAICF**	Inside Corner-Front In	10"	11 lbs
SHAICB**	Inside Corner-Bottom In	10"	11 lbs
SHAOCF**	Outside Corner-Front In	5"	7 lbs
SHAOCB**	Outside Corner-Bottom In	5"	7 lbs
SHA135ICF**	135° Inside Corner-Front In	10"	11 lbs
SHA135ICB**	135° Inside Corner-Bottom In	10"	11 lbs
SHA135OCF**	135° Outside Corner-Front In	5"	7 lbs
SHA135OCB**	135° Outside Corner-Bottom In	5"	7 lbs
SHADESBL**	Dec. End Section-Bot. In, Left	12 ½'	11 lbs
SHADESBR**	Dec. End Section-Bot. In, Right		11 lbs
SHADESFL**	Dec. End Section-Front In, Left		7 lbs
SHADESFR**	Dec. End Section-Front In, Right		7 lbs
SHASP**	Splice Plate	0–¼"	1 lbs
SHAFL3**	Filler Section 3 in.	0–3"	1 lbs
SHAFL6**	Filler Section 6 in.	3–6"	1 lbs
SHAFL9**	Filler Section 9 in.	6–9"	2 lbs
SHAFL12**	Filler Section 12 in.	9–12"	3 lbs
SHA-FL18**	Filler Section 18 in.	15–18"	5 lbs
SHADRF**	Receptacle Section-Front In	4 ½"	2 lbs
SHADRB**	Receptacle Section-Bottom In		
PK5S*	Standard Pedestal 4 ⅛ in. (H)	—	2 lbs
PK5A*	Architectural Pedestal 4 ⅛ in. (H)		
SO1A***	Stand-Off Bracket	—	1 lbs

*One pedestal. Two required on units up to 10 ft., three required on units over 10ft.

**Add suffix -P for painted followed by the color code (i.e. W for White, B for Black, etc.), -C for clear anodized (excludes PK5S—Black only).

***All Stand-off Brackets come standard as Beige.

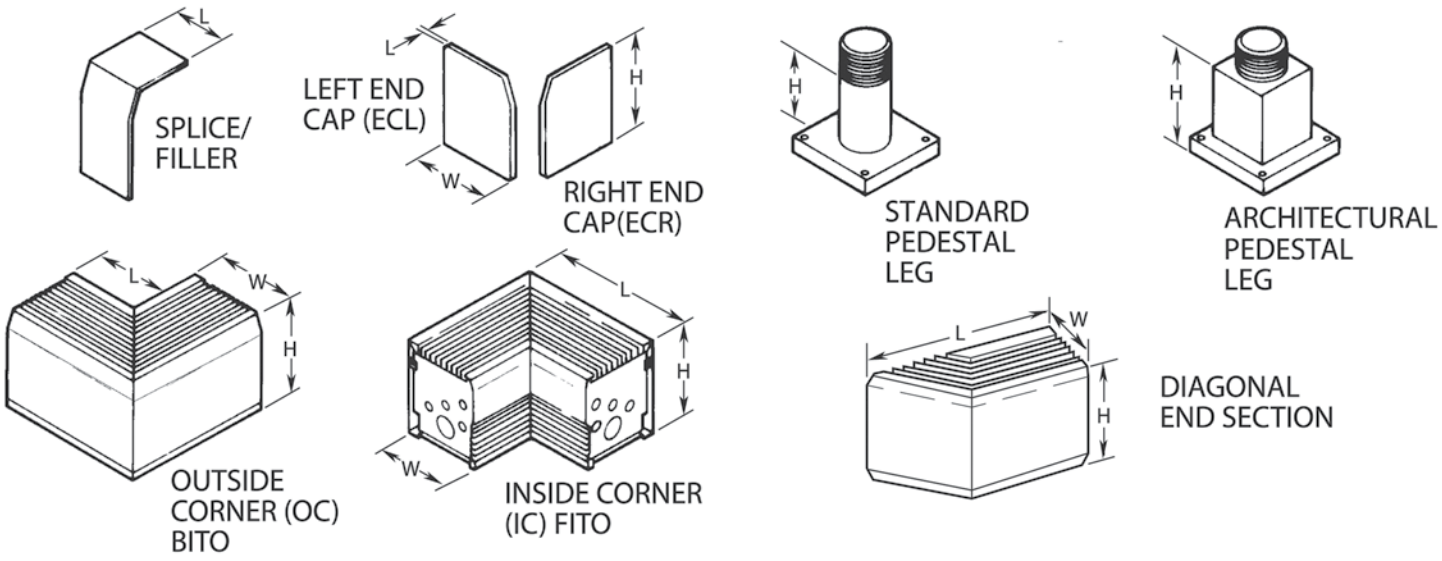

QMARK A Marley Engineered Products Brand
rev: Aug 2026

DBSL SERIES
Slimline Aluminum Convector





Bottom inlet unit is only 2 ¾ in. wide by 6 in. tall. Can be mounted to wall (3 in. above floor) or in front of window mounted on pedestals.



Front inlet unit is only 2 ¾ in. wide by 6 in. tall. Can be mounted to wall or directly to floor.



Hollow pedestals are 3 in. tall and allow concealed wiring access when stubbed through concrete floors.

Slimline 12-gauge aluminum convectors provide warmth and draft protection with a design that sits **closer to the wall** for a less obtrusive solution that still provides **expansive airflow**. These units feature multiple heating configurations and other accessories, so you can tailor your output, aesthetics and controls to fit your needs.

Key Features:

Higher Heat Output
Slimline design fits a taller housing into a compact footprint for enhanced output that's useful for draft protection, supplemental or primary heating.

Multiple Configurations
Customize your convector to match the specific heating needs and dimensions of the surrounding environment, including continuous, mullion-to-mullion design that makes your heating system virtually invisible. Flexible heat output levels are available, and you can order the length, voltage and color you need to fit your room exactly.

Accessory Options
Blend your convector into your building's design to provide a symmetrical heating layout. Blank sections, fillers, corners and caps can be added to your convector for a more finished look that suits your room. With cutting up to 1/32 of an inch and mitered corners of up to 43°, Marley can provide wall-to-wall convectors based on your blueprints or even just a concept sketch.

Custom Colors
No need to repaint on-site. Provide your own sample color chip or select from a palette of standard and custom color options.

Scan the QR code to access additional specs and features.

Ideal Spaces:

Living Rooms
Bedrooms
Offices
Hallways & Lobbies
Condos
Conference Rooms
Retail Spaces
Floor-to-Ceiling Curtain Walls

Intertek

White | Beige | Charcoal Grey

Bronze | Black | Aluminum

Custom and/or Anodized Colors also Available

DBSL SERIES
Slimline Aluminum Convector

Lengths

Length	2′	28″	3′	4′	5′	6′
Shipping Weight	8 lbs	8 lbs	10 lbs	13 lbs	17 lbs	20 lbs

NOTE: Additional cabinet sizes available up to 10 ft. length. Backs are provided standard with no finish. For finished backs, add 10% to list price. Knockouts on back omitted by request only. All models are non-stock, made-to-order. Consult sales representative for more information on specs and lead times.

*Watts per Ft.**

100	125	150
188	250	

*Voltages**

120	208	240
277	347	600

*Specs vary by length. Refer to the submittal sheet for full details.

Blank Section & Accessories:

CATALOG NO.	DIMENSIONS (W x H x L)	INLET	SHIP WT.
SLCBS1F	2 ¾″ x 6″ x 1′	Front	4 lbs
SLCBS1B		Bottom	
SLCBS2F	2 ¾″ x 6″ x 28″	Front	7 lbs
SLCBS2B		Bottom	
SLCBS3F	2 ¾″ x 6″ x 3′	Front	9 lbs
SLCBS3B		Bottom	
SLCBS4F	2 ¾″ x 6″ x 4′	Front	12 lbs
SLCBS4B		Bottom	
SLCBS5F	2 ¾″ x 6″ x 5′	Front	16 lbs
SLCBS5B		Bottom	
SLCBS6F	2 ¾″ x 6″ x 6′	Front	19 lbs
SLCBS6B		Bottom	

NOTE: Blank section grilles are not punched unless requested. Additional sections available for cabinets up to 10 ft. length.

CATALOG NO.	DESCRIPTION	ADDITIONAL SPACE REQUIRED	SHIP WT.
SLCECL	End Cap — Left	⅛″	1 lbs
SLCECR	End Cap — Right	⅛″	1 lbs
SLCICF	Inside Corner-Front In	8 ½″	5 lbs
SLCICB	Inside Corner-Bottom In	8 ½″	5 lbs
SLCOCF	Outside Corner-Front In	5″	4 lbs
SLCOCB	Outside Corner-Bottom In	5″	4 lbs
SLCDESBL	Dec. End Section-Bottom In, Left	9 ⁹⁄₆₄″	5 lbs
SLCDESBR	Dec. End Section-Bottom In, Right	9 ⁹⁄₆₄″	5 lbs
SLCDESFL	Dec. End Section-Front In, Left	9 ⁹⁄₆₄″	4 lbs
SLCDESFR	Dec. End Section-Front. In, Right	9 ⁹⁄₆₄″	4 lbs
SLCSP	Splice Plate	0–¼″	1 lbs
SLCFL3	Filler Section 3 in.	0–3″	1 lbs
SLCFL6	Filler Section 6 in.	3–6″	1 lbs
SLCFL9	Filler Section 9 in.	6–9″	1 lbs
SLCFL12	Filler Section 12 in.	9–12″	1 lbs
SLCFL18	Filler Section 18 in.	12–18″	1.5 lbs
SLCFL24	Filler Section 24 in.	18–24″	1.5 lbs
SLCDRF	Receptacle Section-Front In	4 ½″	1.5 lbs
SLCDRB	Receptacle Section-Bottom In	4 ½″	1.5 lbs
SLCPEF	Pneu/Ele Sw-Front In	4 ½″	2 lbs
SLCPEB	Pneu/Ele Sw-Bot. In	4 ½″	2 lbs
SLCPK3A**	Architectural Pedestal	—	2 lbs
SO1A***	Stand-Off Bracket	—	1 lbs

*Add suffix -P for painted followed by the appropriate color code (i.e. W for white, B for black, etc.), -C for clear anodized
**One pedestal. Two pedestals required on units up to 10 ft. and three required on units over 10 ft.
***Beige is standard.

Optional Built-In Controls:

Suffix*	OPTIONAL BUILT-IN CONTROLS	USE CASE(S)	RATINGS & DESCRIPTIONS
T	Single-Pole Thermostat	Ideal for 120v and 277v heaters	Rated 25 amps @ 120–240 VAC and 22 amps @ 277 VAC. Pilot duty rating of 125 VA (all voltages) 60–120°F temperature range adjustable through outlet grille-tamper-resistant. (See Note B)
2T	Double-Pole Thermostat	Ideal for 208v and 240v heaters	Rated 25 amps @ 120–240 VAC and 22 amps @ 277 VAC. Pilot duty rating of 125 VA (all voltages). 60–120°F temperature range adjustable through outlet grille-tamper-resistant. (See Note B for amperage restrictions)
DS	Power On/Off Switch	Ideal for servicing	Double-pole, rated 20 amp @ 120–277 VAC. (See Note A.) For heaters over 20 amps specify two
TR**	Transformer Relay	Ideal for remote, low voltage thermostats	Single-pole, low voltage relay with built-in transformer (24 VAC control), rated 22 amps @ 120–240 VAC and 22 amps @ 277 VAC. (See Note E and F) 17 amps @ 347V. Not available for three-phase heaters
PR	Power Relay	Ideal for multiple heater connections or BMS / EMS connections	Single-pole magnetic relay, rated 25 amps @ 120–600 VAC. (See Note E). Specify control voltage
PDT	Single-Pole Thermostat	For sequencing low voltage connections with a transformer relay	Same as -T except Pilot Duty. (See Note C)
R**	Receptacle	For additional electrical connections.	For built-in or as installed in a control section

* Addition To Basic Catalog No.
** Will add 4 in. to length of heater

Notes: (A) For single-phase loads over 20A, specify (2) power on/off switches. (B) This control option is not available on single-phase heaters over 25 amps (22 amps on 277 VAC). In combination with the power on/off switch option use the 2T thermostat option on heaters over 20 amps. (C) Requires PR or TR. (D) Up to 30 power relays in different heaters can be controlled by each stage of a two-stage pilot duty thermostat. (E) Two relays are required on single-phase heaters over 20 amps with a disconnect switch, over 25 amps without a disconnect switch. (F) For DBSL Series the TR (tranformer relay) R (Duplex Receptacle) will be installed in separate 4 in. long internal control boxes.

SLQDB SERIES
Draft Barrier Convector





Bottom inlet unit is only 2 ⅝ in. wide by 4 in. tall. Can be mounted to wall (2 in. above floor) or in front of window mounted on pedestals.



Hollow pedestals are 3 in. tall and allow concealed wiring access when stubbed through concrete floors.

Keep your windows **free from condensation and drafts** with reliable aluminum draft barrier convectors. Their **low-profile design provides an unobtrusive heating solution** that can be seamlessly added to any wall space. With multiple configurations and accessory options, you're sure to get just what you need.

Key Features:

Multiple Configurations

Customize your convector to match the specific heating needs and dimensions of the surrounding environment, including continuous, mullion-to-mullion design that makes your heating system virtually invisible. Flexible heat output levels are available, and you can order the length, voltage and color you need to fit your room exactly.

Accessory Options

Blend your convector into your building's design to provide a symmetrical heating layout. Blank sections, fillers, corners and caps can be added to your convector for a more finished look that suits your room. With cutting up to 1/32 of an inch and mitered corners of up to 43°, Marley can provide wall-to-wall convectors based on your blueprints or even just a concept sketch

2-Piece Extruded Aluminum Construction

For rapid installation and easy maintenance, these extruded 12-gauge aluminum convectors feature a simple, two-piece design. The "Snap-Lock" closure allows you to easily secure the two pieces with no need for other fasteners.

Easy Service/Installation

Make routine maintenance faster and easier with a draft barrier convector. It is pre-wired for entry on the right or left, with identical junction boxes on both ends. The power supply can be connected from the bottom, the rear or either end for easy wiring of multiple units from one point

Scan the QR code to access additional specs and features.

Ideal Spaces:

Living Rooms
Bedrooms
Offices
Hallways & Lobbies
Condos
Conference Rooms
Retail Spaces
Floor-to-Ceiling Curtain Walls

Intertek

White Beige Charcoal Grey

Bronze Black Aluminum

Custom and/or Anodized Colors also Available

SLQDB SERIES
Draft Barrier Convector

Lengths

Length	2′	28″	3′	4′	5′	6′
Shipping Weight	8 lbs	8 lbs	10 lbs	13 lbs	17 lbs	20 lbs

NOTE: Cabinet available up to 10 ft. length. Custom length cabinets are priced with heater and blank to the next larger size. Backs are provided standard with no finish. For finished backs, add 10% to list price. Knockouts on back omitted by request only. All models are NON-STOCK made-to-order. When ordering, specify quantity, catalog number, voltage, wattage, optional controls, and color. Consult sales representative for lead times.

*Watts per Ft.**

100	125
150	

*Voltages**

120	208	240
277	347	600

*Specs vary by length. Refer to the submittal sheet for full details.

Optional Accessories:

CATALOG NO.	DIMENSIONS (W x H x L)	SHIP WT.
SLDBS1B	2 ⅝″ x 4″ x 2′	4 lbs
SLDBS2B	2 ⅝″ x 4″ x 28″	7 lbs
SLDBS3B	2 ⅝″ x 4″ x 3′	9 lbs
SLDBS4B	2 ⅝″ x 4″ x 4′	12 lbs
SLDBS5B	2 ⅝″ x 4″ x 5′	16 lbs
SLDBS6B	2 ⅝″ x 4″ x 6′	19 lbs

NOTE: Blank section grilles are not punched unless requested. Additional sections available for cabinets up to 12 ft. length.

CATALOG NO.	DESCRIPTION	ADDITIONAL SPACE REQUIRED	SHIP WT.
SLDECL	End Cap — Left	⅛"	1 lbs
SLDECR	End Cap — Right	⅛"	1 lbs
SLDICB	Inside Corner-Bottom In	5″	5 lbs
SLDOCB	Outside Corner-Bottom In	2 ½″	5 lbs
SLD135ICB	135° Inside Corner-Bottom In	3 ½″	4 lbs
SLD135OCB	135° Outside Corner-Bottom In	2 ½″	4 lbs
SLDSP	Splice Plate	0–¼″	1 lbs
SLDFL3	Filler Section 3 in.	0–3″	1 lbs
SLDFL6	Filler Section 6 in.	3–6″	1 lbs
SLDFL9	Filler Section 9 in.	6–9″	1 lbs
SLDFL12	Filler Section 12 in.	9–12″	1 lbs
SLDFL18	Filler Section 18 in.	12–18″	1.5 lbs
SLDFL24	Filler Section 24 in.	18–24″	1.5 lbs
SLDDRB	Receptacle Section-Bottom In Must use 1 ft. Blank Section	12″	2 lbs
SLDPK3A**	Architectural Pedestal	—	2 lbs
SO1A***	Stand-Off Bracket	—	1 lbs

*Add suffix -P for painted followed by the appropriate color code (i.e. W for white, B for black, etc.), -C for clear anodized
**One pedestal. Two pedestals required on units up to 10 ft. and three required on units over 10 ft.
***All Stand-off Brackets come standard as Beige.

Optional Built-In Controls:

SUFFIX*	OPTIONAL BUILT-IN CONTROLS	USE CASE(S)	RATINGS & DESCRIPTIONS
T	Single-Pole Thermostat	Ideal for localized control	Rated 24 amps @ 120-240 VAC and 22 amps @ 277 VAC. Pilot duty rating of 125 VA (all voltages). 60-120°F temperature range; adjustable through outlet grille-tamper-resistant. (See Note B) Not available on three-phase heaters.
DS	Power On/Off Switch	Ideal for servicing	Double-pole, rated 20 amp @ 120-277 VAC. (See Note A) For three-phase heaters and single-phase heaters over 20 amps specify two.
PR	Power Relay	Ideal for multiple heater connections or BMS / EMS connections	Single-pole magnetic relay, rated 18 amps @ 120-600 VAC. (See Note C) Specify control voltage. Rated 24 amps @ 120-240 VAC and 22 amps @ 277 VAC. Pilot duty rating of 125 VA — all voltages (See Note C & D)

*Addition To Basic Catalog No. (See Note D)
NOTE: A. For single-phase loads over 20A and all three-phase loads, specify (2) power on/off switches. B. This control option is not available on single-phase heaters over 24 amps (22 amps on 277 VAC). C. Specify holding coil voltage where applicable. D. Add 4 in. to the cabinet length.

CPH & DPH SERIES
Commercial & Decorative Pedestal Steel Convector



CPH



DPH

For hallways, terminals and conference spaces, steel commercial convectors provide a **reliable draft barrier** and heating solution. Available with a full length decorative grille, this pedestal-mounted heater features **multiple lengths and output levels** to best address your heating needs.

Key Features:

Multiple Configurations
Configure your convector to match the specific heating needs and dimensions of your space. Select your heat output level with either single or up to three stacked heat elements. Order the length, voltage and color you need to fit your room exactly.

Higher Heat Output
Increase your heating capacity for cold spots or isolated areas. Up to 3 stacked heating elements expand your output to provide quiet, reliable heat for larger commercial spaces.

Accessory Options
Blend your convector into your building's design to provide a cohesive solution. Blank sections, fillers, corners and caps can be added to your convector for a more finished look that suits your space.

Built-In Control Options
Get the accurate controls you need, pre-installed. You can order anything from a simple on/off switch to a thermostat, transformer or power relay.

Custom Colors
No need to repaint on-site. Provide your own sample color chip or select from a palette of standard and custom color options.

Scan the QR code to access additional specs and features.

Ideal Spaces:

Offices
Hallways
Lobbies
Retail Spaces
Terminals

Commercial / Institutional Spaces with Floor-to-Ceiling Windows

c UL us

White | Beige | Charcoal Grey

Bronze | Black | Aluminum

Custom color also available

QMARK A Marley Engineered Products Brand
rev: Aug 2026

CPH & DPH SERIES
Commercial & Decorative Pedestal Steel Convector

5 ½" x 3" – Single Element

Lengths

Length	28"	3′	4′	5′	6′	8′	10′
Shipping Weight	11 lbs	15 lbs	18 lbs	25 lbs	29 lbs	38 lbs	47 lbs

NOTE: All models are NON-STOCK, MADE-TO-ORDER. When ordering, specify quantity, catalog number, voltage, wattage, optional controls, and color. Consult sales representative for lead times.

*Watts per Ft.**

125	188
250	

*Specs vary by length. Refer to the submittal sheet for full details.

*Voltages**

120	208	240
277	347	600

7" x 5" – Multiple Elements

Available Length

Length	28"	3′	4′	5′	6′	8′	10′
Shipping Weight	11 lbs	15 lbs	18 lbs	25 lbs	29 lbs	38 lbs	47 lbs

NOTE: All models are NON-STOCK, MADE-TO-ORDER. When ordering, specify quantity, catalog number, voltage, wattage, optional controls, and color. Consult sales representative for lead times.

*Watts per Ft.**

1 Element*	125	188	250
2 Elements*	375	500	
3 Elements*	564	625	750

*Specs vary by length. Refer to the submittal sheet for full details.

*Voltages**

Single Phase*	208	240	277
	347	600	
Three Phase*	208	240	600

Optional Accessories:

	CATALOG NO.			COMPATIBLE WITH		
	CPH SERIES	DPH SERIES	DESCRIPTION	CPH SERIES	DPH SERIES	SHIP WT.
BLANK SECTIONS	CPH05BL21	DPH05BL21	28-Inch Blank Section	CPH05A Heaters	DPH05A Heaters	10 lbs
	CPH05BL31	DPH05BL31	3-Foot Blank Section			13 lbs
	CPH05BL41	DPH05BL41	4-Foot Blank Section			17 lbs
	CPH05BL51	DPH05BL51	5 Foot Blank Section			21 lbs
	CPH05BL61	DPH05BL61	6-Foot Blank Section	CPH05A Heaters	DPH05A Heaters	25 lbs
	CPH05BL81	DPH05BL81	8-Foot Blank Section			32 lbs
	CPH05BL101	DPH05BL101	10-Foot Blank Section			42 lbs
	CPH07BL21	DPH07BL21	28-Inch Blank Section	CPH07A Heaters	DPH07A Heaters	14 lbs
	CPH07BL31	DPH07BL31	3-Foot Blank Section			18 lbs
	CPH07BL41	DPH07BL41	4-Foot Blank Section			24 lbs
	CPH05BL51	DPH05BL51	5 Foot Blank Section			30 lbs
	CPH07BL61	DPH07BL61	6-Foot Blank Section	CPH07A Heaters	DPH07A Heaters	36 lbs
	CPH07BL81	DPH07BL81	8-Foot Blank Section			48 lbs
	CPH07BL101	DPH07BL101	10-Foot Blank Section			60 lbs
PEDESTAL LEG KITS	PHB052	PHB052	Pedestal Leg Kit for 2, 3 & 4 ft. units (quantity 3)	Legs must be ordered with CPH05A Heaters/Blanks	Legs must be ordered with DPH05A Heaters/Blanks	3 lbs
	PHB053	PHB053	Pedestal Leg Kit for 5, 6 & 8 ft. units (quantity 3)			4 lbs
	PHB054	PHB054	Pedestal Leg Kit for 10 ft. unit (quantity 4)			5 lbs
	PHB072	PHB072	Pedestal Leg Kit for 2, 3 & 4 ft. units (quantity 2)	Legs must be ordered with CPH07A Heaters/Blanks	Legs must be ordered with DPH07A Heaters/Blanks	4 lbs
	PHB073	PHB073	Pedestal Leg Kit for 5, 6 & 8 ft. units (quantity 3)			5 lbs
	PHB074	PHB074	Pedestal Leg Kit for 10 ft. unit (quantity 4)			7 lbs
END CAPS RIGHT	CSH05ECR	DSH05ECR	Right Hand End Cap	CPH05A/07A Heaters/Blanks	DPH05A/07A Heaters/Blanks	1 lbs
	CSH07ECR	DSH07ECR	Right Hand End Cap			1 lbs
END CAPS LEFT	CSH05ECL	DSH05ECL	Left Hand End Cap	CPH05A/07A Heaters/Blanks	DPH05A/07A Heaters/Blanks	1 lbs
	CSH07ECL	DSH07ECL	Left Hand End Cap			1 lbs

All steel convectors come standard with end caps. All pedestal style steel convectors come standard with pedestals. Outlet Mesh: Price per foot. 14-Gauge Front Cover: add 10% to heater price. Standard color included in base price. Other colors available. See paint policy page for information on custom paint colors. If color is not specified, front covers will be Beige. Back, grille, and accessories will be statuary bronze. When ordering, specify heater catalog number, voltage, phase, suffix catalog number for built-in controls, color, and options. Specify color for pedestal legs.

See Convector Heater Controls page for Optional Controls.

DSH SERIES
Decorative Sill-Height Steel Convector



Add a **designer touch** to retail spaces, offices and lobbies with a decorative steel convector. Featuring the same heating levels and available options as the standard commercial steel convector, this model also offers a **full-length louvered grille design** that creates a striking accent wherever it's installed.

Key Features:

Decorative Grille

Create a more seamless sight line with decorative steel convectors. Their uninterrupted full-length louvers provide a designer accent to complement your room design.

Multiple Configurations

Configure your convector to match the specific heating needs and dimensions of your space. Select your heat output level with either single or up to three stacked heat elements. Order the length, voltage and color you need to fit your room exactly.

Higher Heat Output

Increase your heating capacity for cold spots or isolated areas. Up to three stacked heating elements expand your output to provide quiet, reliable heat for larger spaces

Accessory Options

Blend your convector into your building's design to provide a cohesive solution. Blank sections, fillers, corners and caps can be added to your convector for a more finished look that suits your space.

Ideal Spaces:

Offices
Hallways
Lobbies
Retail Spaces
Terminals

Commercial / Institutional Spaces with Floor-to-Ceiling Windows

c UL us

White | Beige | Charcoal Grey

Bronze | Black | Aluminum

Custom and/or Anodized Colors also Available

Scan the QR code to access additional specs and features.

For more information visit MarleyMEP.com/Products/Convector-Heaters

QMARK A Marley Engineered Products Brand

rev: Aug 2026

DSH SERIES
Decorative Sill-Height Steel Convector

5 ½" x 3" – Single Element

Lengths

Length	28"	3′	4′	5′	6′	8′	10′
Shipping Weight	11 lbs	15 lbs	18 lbs	25 lbs	29 lbs	38 lbs	47 lbs

NOTE: All models are NON-STOCK, MADE-TO-ORDER. When ordering, specify quantity, catalog number, voltage, wattage, optional controls, and color. Consult sales representative for lead times.

*Watts per Ft.**

125	188
250	

*Specs vary by length. Refer to the submittal sheet for full details.

*Voltages**

120	208	240
277	347	600

7" x 5" & 14" x 5" – Multiple Elements

Lengths

	Length	28"	3′	4′	5′	6′	8′	10′
Shipping Weight	*7" x 5"*	17 lbs	21 lbs	28 lbs	35 lbs	42 lbs	56 lbs	70 lbs
	14" x 5"	25 lbs	32 lbs	42 lbs	53 lbs	60 lbs	80 lbs	100 lbs

NOTE: All models are NON-STOCK, MADE-TO-ORDER. When ordering, specify quantity, catalog number, voltage, wattage, optional controls, and color. Consult sales representative for lead times.

*Watts per Ft.**

1 Element*	125	188	250
2 Elements*	375	500	
3 Elements*	564	625	750

*Specs vary by length. Refer to the submittal sheet for full details.

*Voltages**

Single Phase*	208	240	277
	347	600	
Three Phase*	208	240	600

Optional Accessories:

	CATALOG NO.	COMPATIBLE WITH	HEIGHT	DEPTH	LENGTH	SHIP WT.
BLANK SECTIONS	DSH05BL2*	DSH05	5 ½"	3"	28"	10 lbs
	DSH05BL3*				3′	13 lbs
	DSH05BL4*				4′	17 lbs
	DSH05BL5*				5′	21 lbs
	DSH05BL6*				6′	25 lbs
	DSH05BL8*				8′	32 lbs
	DSH05BL10*				10′	42 lbs
	DSH07BL2*	DSH07	7"	5"	28"	14 lbs
	DSH07BL3*				3′	18 lbs
	DSH07BL4*				4′	24 lbs
	DSH07BL5*				5′	30 lbs
	DSH07BL6*				6′	36 lbs
	DSH07BL8*				8′	48 lbs
	DSH07BL10*				10′	60 lbs
	DSH14BL2*	DPH05	14"	5"	28"	22 lbs
	DSH14BL3*				3′	29 lbs
	DSH14BL4*				4′	38 lbs
	DSH14BL5*				5′	48 lbs
	DSH14BL6*				6′	57 lbs
	DSH14BL8*				8′	76 lbs
	DSH14BL10*				10′	95 lbs

Outlet Mesh: Price per foot. 14-Gauge Front Cover: add 10% to heater price. Standard color included in base price. Other colors available. See paint policy page for information on custom paint colors. Maximum of 250 watts per ft. on front outlet models. When ordering, specify heater catalog number, voltage, phase, suffix catalog number for built-in controls, color, and options. 2. If color is not specified, front covers will be Beige. Front outlet models available only in 14 in. height and 125, 188 and 250 Wt./Ft. configuration. Outlet mesh is not available on front outlet models.

* Additional length the accessory adds to the total installation length. ** Built-in duplex receptacle available.
Add model numbers suffix "-1" for bottom inlet - top outlet; add suffix "-3" for bottom inlet - front outlet.

Dimensions and Clearances:

Cat. No.	Dimensions H	Dimensions D
DSH05	5 ½"	3"
DSH07	7"	5"
DSH14	14"	5"

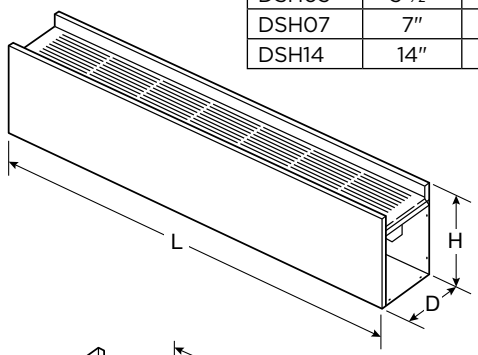

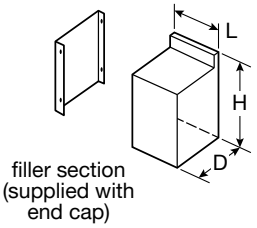

filler section (supplied with end cap)

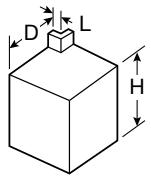

outside corner

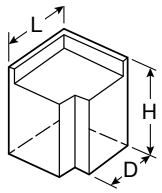

inside

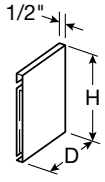

end

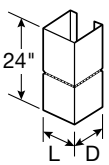

conduit

QMARK A Marley Engineered Products Brand
rev: Aug 2026

DSH SERIES
Decorative Sill-Height Convector

Optional Accessories:

		CATALOG NO.	COMPATIBLE WITH	HEIGHT	DEPTH	LENGTH	ADDITIONAL LENGTH	SHIP WT.
END CAPS	LEFT	DSH14DSH05ECL**	DSH05	5 ½"	2 ½"	—	⅛"	1 lbs
		DSH07ECL**	DSH07	7"	4 ¼"			1 lbs
		DSH14ECL**	DSH14	14"	4 ¼"			1 lbs
	RIGHT	DSH05ECR**	DSH05	5 ½"	2 ½"	—	⅛"	1 lbs
		DSH07ECR**	DSH07	7"	4 ¼"			1 lbs
		DSH14ECR**	DSH14	14"	4 ¼"			1 lbs
FILLER SECTIONS		DSH05FL3	DSH05	5 ½"	5 ⅛"	4	0–3	1 lbs
		DSH07FL3	DSH07	7"	6 ⅛"			2 lbs
		DSH14FL3	DSH14	14"	13 ⅛"			3 lbs
		DSH05FL6**	DSH05	5 ⅛"	2 ½"	7	3–6	2 lbs
		DSH07FL6**	DSH07	6 ⅛"	4 ½"			3 lbs
		DSH14FL6**	DSH14	13 ⅛"	4 ½"			5 lbs
		DSH05FL9**	DSH05	5 ⅛"	2 ½"	10	6–9	3 lbs
		DSH07FL9**	DSH07	6 ⅛"	4 ½"			4 lbs
		DSH14FL9**	DSH14	13 ⅛"	4 ½"			6 lbs
		DSH05FL12**	DSH05	5 ⅛"	2 ½"	13	9–12	4 lbs
		DSH07FL12**	DSH07	6 ⅛"	4 ½"			5 lbs
		DSH14FL12**	DSH14	13 ⅛"	4 ½"			8 lbs
		DSH05FL18**	DSH05	5 ⅛"	2 ½"	19	15–18	5 lbs
		DSH07FL18**	DSH07	6 ⅛"	4 ½"			6 lbs
		DSH14FL18**	DSH14	13 ⅛"	4 ½"			9 lbs
CORNERS	INSIDE	DSH05IC1	DSH05	5 ⅛"	2 ½"	4 ½"	3–3 ½"	2 lbs
		DSH07IC1	DSH07	6 ⅛"	4 ½"	6"	5–5 ½"	4 lbs
		DSH14IC1	DSH14	13 ⅛"	4 ½"	6"	5–5 ½"	6 lbs
	OUTSIDE	DSH05OC1	DSH05	5 ⅛"	2 ½"	1"	0–½"	1 lbs
		DSH07OC1	DSH07	6 ⅛"	4 ½"			2 lbs
		DSH14OC1	DSH14	13 ⅛"	4 ½"			4 lbs
	CONDUIT	SHCC05	DSH05	—	2 ⅝"	2 ½"	—	4 lbs
		SHCC07	DSH07	—	—	—	—	5 lbs
		SHCC14	DSH14	—	3 ⅝"	3"	—	5 lbs
STAND-OFF BRACKETS		SO1	DSH05A	4 ¾"	¾"	3"	—	1 lbs
		SO2	DSH07A	6 ¾"	¾"	3"	—	1 lbs

All steel convectors come standard with end caps. All pedestal style steel convectors come standard with pedestals. Outlet Mesh: Price per foot. 14-Gauge Front Cover: add 10% to heater price. Standard color included in base price. Other colors available. See paint policy page for information on custom paint colors. Maximum of 250 watts per ft. on front outlet models. When ordering, specify heater catalog number, voltage, phase, suffix catalog number for built-in controls, color, and options. 2. If color is not specified, front covers will be Beige. Front outlet models available only in 14 in. height and 125, 188 and 250 Wt./Ft. configuration. Outlet mesh is not available on front outlet models.

*Additional length the accessory adds to the total installation length. **Built-in duplex receptacle available. Add model numbers suffix "-1" for bottom inlet - top outlet; add suffix "-3" for bottom inlet - front outlet.

Typical Installation

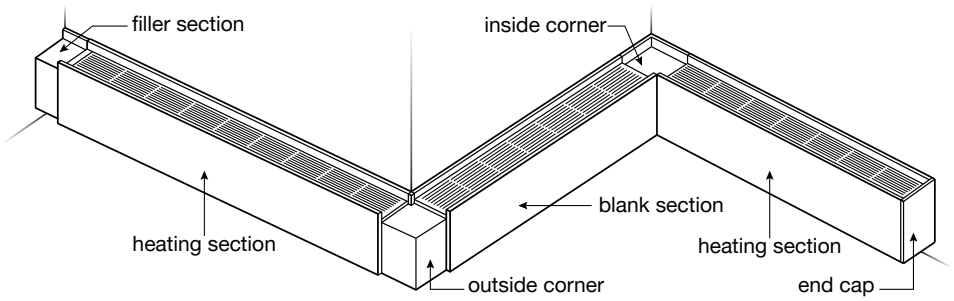

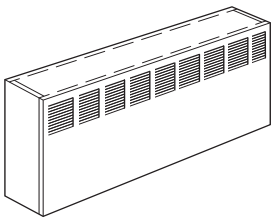

Front Outlet Model
Front outlet is available on Catalog No. DSH14 heaters only, in 125, 188, and 250 watts/foot configuration. Outlet mesh is not available on front outlet models.

QMARK A Marley Engineered Products Brand
rev: Aug 2026

CSH SERIES
Commercial Sill-Height Steel Convector



For hallways, terminals and conference spaces, steel commercial convectors provide a **reliable draft barrier** and heating solution. Available in sill height, these wall mounted convectors feature **multiple lengths and output levels** to best address the spaces' heating needs

Key Features:

16-Gauge Steel Front Cover

Avoid unsightly dents or damage with this durable commercial convector. This unit is built tough for high-traffic, public spaces, thanks to its 16-gauge steel cabinet and baked enamel coating.

Multiple Configurations

Configure your convector to match the specific heating needs and dimensions of your space. Select your heat output level with either single or up to three stacked heat elements. Order the length, voltage and color you need to fit your room exactly.

Higher Heat Output

Increase your heating capacity for cold spots or isolated areas. Up to 3 stacked heating elements expand your output to provide quiet, reliable heat for larger commercial spaces.

Accessory Options

Blend your convector into your building's design to provide a cohesive solution. Blank sections, fillers, corners and caps can be added to your convector for a more finished look that suits your space.

Ideal Spaces:

Offices
Hallways
Lobbies
Conference Rooms
Retail
Floor-to-Ceiling Windows

c UL us

White | Beige | Charcoal Grey

Bronze | Black | Aluminum

Custom and/or Anodized Colors also Available

Scan the QR code to access additional specs and features.

CSH SERIES
Commercial Sill-Height Steel Convector

5 ½" x 3" – Single Element Lengths

Length	28"	3′	4′	5′	6′	8′	10′
Shipping Weight	11 lbs	15 lbs	18 lbs	25 lbs	29 lbs	38 lbs	47 lbs

NOTE: All models are NON-STOCK, MADE-TO-ORDER. When ordering, specify quantity, catalog number, voltage, wattage, optional controls, and color. Consult sales representative for lead times.

*Watts per Ft.**

125	188
250	

*Voltages**

120	208	240
277	347	600

7" x 5" & 14" x 5" – Multiple Elements Lengths

	Length	28"	3′	4′	5′	6′	8′	10′
Shipping Weight	*7" x 5"*	17 lbs	21 lbs	28 lbs	35 lbs	42 lbs	56 lbs	70 lbs
	14" x 5"	25 lbs	32 lbs	42 lbs	53 lbs	60 lbs	80 lbs	100 lbs

NOTE: All models are NON-STOCK, MADE-TO-ORDER. When ordering, specify quantity, catalog number, voltage, wattage, optional controls, and color. Consult sales representative for lead times.

*Watts per Ft.**

1 Element	125	188	250
2 Elements	375	500	
3 Elements	564	625	750

*Voltages**

Single Phase	208	240	277
	347	600	
Three Phase	208	240	600

*Specs vary by length. Refer to the submittal sheet for full details.

Optional Accessories:

	CATALOG NO.	COMPATIBLE WITH	HEIGHT	DEPTH	LENGTH	SHIP WT.
BLANK SECTIONS	CSH05BL2*	CSH05	5 ½"	3"	28"	10 lbs
	CSH05BL3*				3′	14 lbs
	CSH05BL4*				4′	18 lbs
	CSH05BL5*				5′	23 lbs
	CSH05BL6*				6′	27 lbs
	CSH05BL8*				8′	36 lbs
	CSH05BL10*				10′	45 lbs
	CSH07BL2*	CSH07	7"	5"	28"	16 lbs
	CSH07BL3*				3′	20 lbs
	CSH07BL4*				4′	26 lbs
	CSH07BL5*				5′	33 lbs
	CSH07BL6*				6′	39 lbs
	CSH07BL8*				8′	52 lbs
	CSH07BL10*				10′	65 lbs
	CSH14BL2*	CSH14	14"	5"	28"	23 lbs
	CSH14BL3*				3′	30 lbs
	CSH14BL4*				4′	40 lbs
	CSH14BL5*				5′	50 lbs
	CSH14BL6*				6′	60 lbs
	CSH14BL8*				8′	80 lbs
	CSH14BL10*				10′	100 lbs

Outlet Mesh: Price per foot. 14-Gauge Front Cover: add 10% to heater price. Standard color included in base price. Other colors available. See paint policy page for information on custom paint colors. Maximum of 250 watts per ft. on front outlet models. When ordering, specify heater catalog number, voltage, phase, suffix catalog number for built-in controls, color, and options. 2. If color is not specified, front covers will be Beige. Front outlet models available only in 14 in. height and 125, 188 and 250 Wt./Ft. configuration. Outlet mesh is not available on front outlet models..

* Additional length the accessory adds to the total installation length. ** Built-in duplex receptacle available.
Add model numbers suffix "-1" for bottom inlet - top outlet; add suffix "-3" for bottom inlet - front outlet. Additional accessories and diagrams are on the following pages

Dimensions and Clearances:

	Dimensions	
Cat. No.	H	D
CSH05	5 ½"	3"
CSH07	7"	5"
CSH14	14"	5"

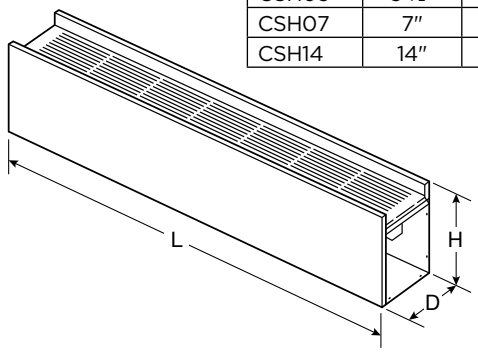

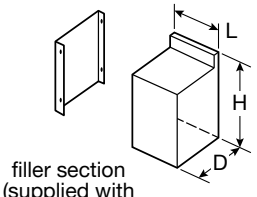

filler section (supplied with end cap)

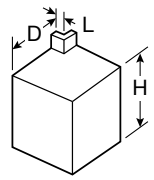

outside corner

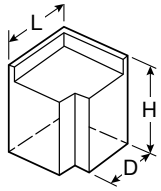

inside

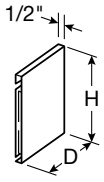

end

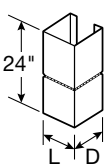

conduit

QMARK A Marley Engineered Products Brand
rev: Aug 2026

CSH SERIES
Commercial Sill-Height Convector

Optional Accessories:

		CATALOG NO.	COMPATIBLE WITH	HEIGHT	DEPTH	LENGTH	ADDITIONAL LENGTH	SHIP WT.
END CAPS	LEFT	CSH05ECL**	CSH05	5 ½"	2 ½"	—	⅛"	1 lbs
		CSH07ECL**	CSH07	7"	4 ¼"			1 lbs
		CSH14ECL**	CSH14	14"	4 ¼"			1 lbs
	RIGHT	CSH05ECR**	CSH05	5 ½"	2 ½"	—	⅛"	1 lbs
		CSH07ECR**	CSH07	7"	4 ¼"			1 lbs
		CSH14ECR**	CSH14	14"	4 ¼"			1 lbs
FILLER SECTIONS		CSH05FL3	CSH05	5 ½"	5 ⅛"	4"	0–3"	1 lbs
		CSH07FL3	CSH07	7"	6 ⅛"			2 lbs
		CSH14FL3	CSH14	14"	13 ⅛"			3 lbs
		CSH05FL6**	CSH05	5 ⅛"	2 ½"	7"	3–6"	2 lbs
		CSH07FL6**	CSH07	6 ⅛"	4 ½"			3 lbs
		CSH14FL6**	CSH14	13 ⅛"	4 ½"			5 lbs
		CSH05FL9**	CSH05	5 ⅛"	2 ½"	10"	6–9"	3 lbs
		CSH07FL9**	CSH07	6 ⅛"	4 ½"			4 lbs
		CSH14FL9**	CSH14	13 ⅛"	4 ½"			6 lbs
		CSH05FL12**	CSH05	5 ⅛"	2 ½"	13"	9–12"	4 lbs
		CSH07FL12**	CSH07	6 ⅛"	4 ½"			5 lbs
		CSH14FL12**	CSH14	13 ⅛"	4 ½"			8 lbs
		CSH05FL18**	CSH05	5 ⅛"	2 ½"	19"	15–18"	5 lbs
		CSH07FL18**	CSH07	6 ⅛"	4 ½"			6 lbs
		CSH14FL18**	CSH14	13 ⅛"	4 ½"			9 lbs
CORNERS	INSIDE	CSH05IC1	CSH05	5 ⅛"	2 ½"	4 ½"	3–3 ½"	2 lbs
		CSH07IC1	CSH07	6 ⅛"	4 ½"	6"	5–5 ½"	4 lbs
		CSH14IC1	CSH14	13 ⅛"	4 ½"	6"	5–5 ½"	6 lbs
	OUTSIDE	CSH05OC1	CSH05	5 ⅛"	2 ½"	1"	0–½"	1 lbs
		CSH07OC1	CSH07	6 ⅛"	4 ½"			2 lbs
		CSH14OC1	CSH14	13 ⅛"	4 ½"			4 lbs
	CONDUIT	SHCC05	CSH05	—	2 ⅝"	2 ½"	—	4 lbs
		SHCC07	CSH07	—	—	—	—	5 lbs
		SHCC14	CSH14	—	3 ⅝"	3"	—	5 lbs
STAND-OFF BRACKETS		SO1	CSH05	4 ¾"	¾"	3"	—	1 lbs
		SO2	CSH07	6 ¾"	¾"	3"	—	1 lbs

All steel convectors come standard with end caps. All pedestal style steel convectors come standard with pedestals. Outlet Mesh: Price per foot. 14-Gauge Front Cover: add 10% to heater price. Standard color included in base price. Other colors available. See paint policy page for information on custom paint colors. Maximum of 250 watts per ft. on front outlet models. When ordering, specify heater catalog number, voltage, phase, suffix catalog number for built-in controls, color, and options. 2. If color is not specified, front covers will be Beige. Front outlet models available only in 14 in. height and 125, 188 and 250 Wt./Ft. configuration. Outlet mesh is not available on front outlet models..

*Additional length the accessory adds to the total installation length. **Built-in duplex receptacle available. Add model numbers suffix "-1" for bottom inlet - top outlet; add suffix "-3" for bottom inlet - front outlet.

Typical Installation

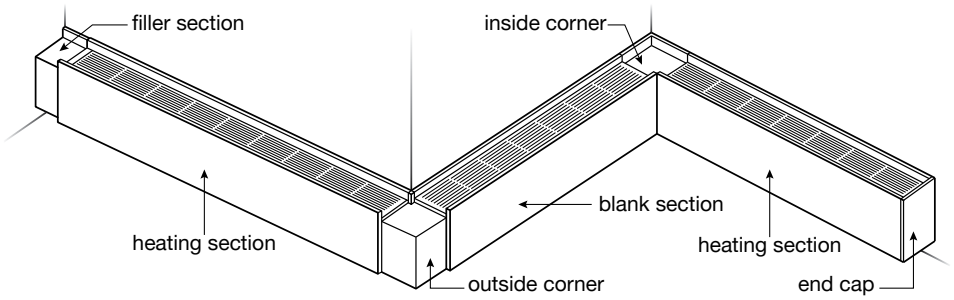

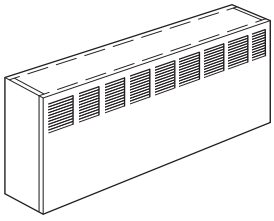

Front Outlet Model
Front outlet is available on Catalog No. CSH14 heaters only, in 125, 188, and 250 watts/foot configuration. Outlet mesh is not available on front outlet models.

QMARK A Marley Engineered Products Brand
rev: Aug 2026

KCJ SERIES
Institutional Electric Convector

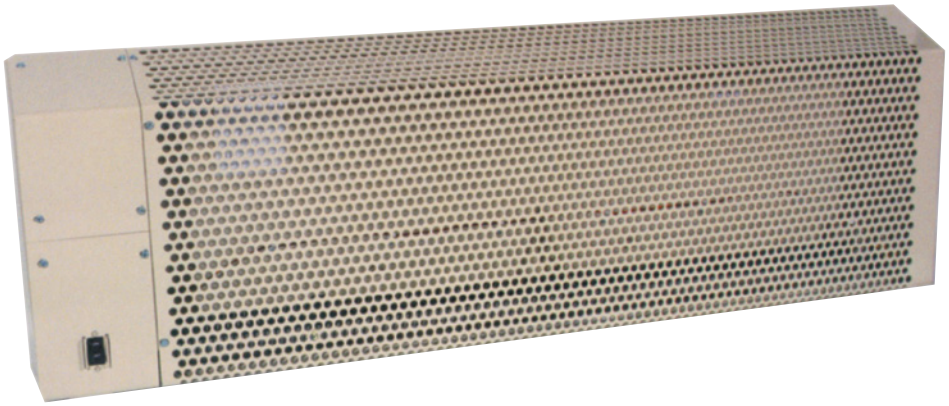

When you need a durable, reliable heating solution with a **low surface temperature**, choose an institutional convector. It's perfect for **high-traffic areas** like hallways, classrooms, libraries and municipal buildings.

Key Features:

Durable Design

Keep hallways and public areas cozy without worrying about your heater getting dented or damaged. This convector is built to endure high-traffic areas with its high-gauge steel cabinet and epoxy-painted coating.

Tamper-Resistant

Keep live voltage away from passersby. The internally secured control box keeps the power supply and wiring for the unit safe from unauthorized access.

Keep Your Intakes Clear

For unrestricted airflow at all times, choose institutional convectors. The top of the unit is sloped at a 45° angle to keep people or objects from accidentally covering the vents.

Cooler to the Touch

Heat the room, not the heater itself. A taller housing allows this unit to operate at a lower surface temperature, so it's cooler to the touch. This allows for safer heating in any room.

Open Airflow

Enjoy efficient, worry-free heating, thanks to this unit's perforated steel front. This design maximizes airflow while providing a lower surface temperature that's safer to the touch.

Technical Specifications:

Construction: 12 gauge Steel
DPST Thermostat Range: 55°–100° F

Ideal Spaces:

Offices
Conference Rooms
Hallways
Lobbies
Waiting Rooms
Common Areas

c UL us

Beige

Scan the QR code to access additional specs and features.

For more information visit MarleyMEP.com/Products/Convector-Heaters

QMARK A Marley Engineered Products Brand

rev: Aug 2026

KCJ SERIES
Institutional Electric Convector

Models & Specifications:

		ELECTRICAL DATA			
	CATALOG NO.	VOLTS	WATTS (K/W)	AMPS	SHIP WT.
■	KCJ400	120	400	3.3	40 lbs
■	KCJ408	208		1.9	
■	KCJ404	240		1.7	
■	KCJ407	277		1.4	
■	KCJ500	120	500	4.2	45 lbs
■	KCJ508	208		2.4	
■	KCJ504	240		2.2	
■	KCJ507	277		1.8	
■	KCJ750	120	750	6.3	55 lbs
■	KCJ758	208		3.6	
■	KCJ754	240		3.3	
■	KCJ757	277		2.7	
■	KCJ753	347		2.2	
■	KCJ1000	120	1000	8.3	65 lbs
■	KCJ1008	208		4.8	
■	KCJ1004	240		4.4	
■	KCJ1007	277		3.6	
■	KCJ1003	347		2.9	
■	KCJ1006	600		1.7	
■	KCJ1250	120	1250	10.4	80 lbs
■	KCJ1258	208		6	
■	KCJ1254	240		5.4	
■	KCJ1257	277		4.5	
■	KCJ1253	347		3.6	
■	KCJ1256	600		2.1	
■	KCJ1500	120	1500	12.5	95 lbs
■	KCJ1508	208		7.2	
■	KCJ1504	240		6.5	
■	KCJ1507	277		5.4	
■	KCJ1503	347		4.3	
■	KCJ1506	600		2.5	
■	KCJ2008	208	2000	9.6	
■	KCJ2004	240		8.8	
■	KCJ2007	277		7.2	
■	KCJ2003	347		5.8	
■	KCJ2006	600		3.3	

SKU Legend: ■ **= Made to Order** (Contact your local Marley Sales Representative for typically associated lead times)

Dimensions and Clearances:

WATTS	LENGTH (A)	HEIGHT	DEPTH
400	24″	16″	5″
500	28″	16″	5″
750	36″	16″	5″
1000	48″	16″	5″
1250	60″	16″	5″
1500	72″	16″	5″
2000	96″	16″	5″

NOTE: Products are made-to-order and cannot be returned.

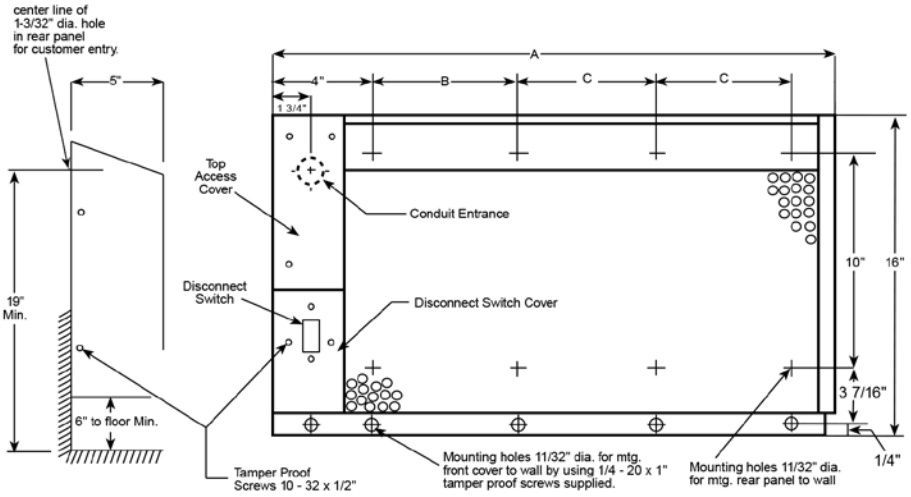

QMARK A Marley Engineered Products Brand
rev: Aug 2026

ST SERIES
Commercial Slope-Top Steel Convector

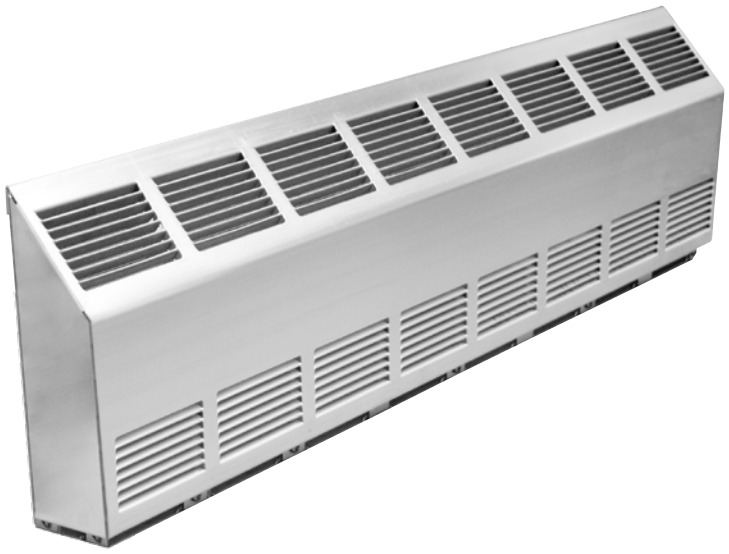

A rugged comfort solution for offices, lobbies or stairwells, this Commercial Slope-Top Convector provides higher heat output with multiple configurations available. Its slope-top design **protects vital airflow** from obstructions, while its heavy-duty steel construction **resists dings and dents**. NEMA 4X models are available for **wet or corrosive environments** like food processing areas, breweries, wastewater treatment plants and swimming pools.

Key Features:

Multiple Configurations
Configure your convector to match the specific heating needs and dimensions of your space. Select your heat output level, length, voltage and color. Stainless steel units are also available.

Higher Heat Options
Increase your heating capacity for cold spots or isolated areas. Anchored metal-sheath elements provide quiet, reliable heat with expanded output to warm larger commercial spaces

Accessory Options
Blend your convector into your building's design to provide a cohesive solution. Blank sections, fillers and corners can be added to your convector for a more finished look that suits your space

Built-In Control Options
Get the accurate controls you need, pre-installed. You can order anything from a simple on/off switch to a thermostat, transformer or power relay

High-Grade Construction Option
For safe, reliable heat in damp or corrosive environments, select a commercial slope-top convector. Available in 16-gauge stainless steel with a NEMA 4X thermostat to protect wiring and controls.

Scan the QR code to access additional specs and features.

Ideal Spaces:

Offices
Hallways
Lobbies
Stairwells

NEMA 4X Models:
Food Processing Areas
Breweries
Wastewater Treatment Plants
Swimming Pools

c UL us

White | Beige | Charcoal Grey

Bronze | Black | Aluminum

Custom Colors also available

For more information visit MarleyMEP.com/Products/Convector-Heaters

QMARK A Marley Engineered Products Brand

rev: Aug 2026

ST SERIES
Commercial Slope-Top Steel Convector

Lengths

Length	28″	3′	4′	5′	6′	8′	10′
Shipping Weight	12 lbs	15 lbs	19 lbs	24 lbs	26 lbs	37 lbs	45 lbs

*Watts per Ft.**

125	188
250	

*Specs vary by length. Refer to the submittal sheet for full details.

*Voltages**

120	208	240
277	347	600

Optional Built-in Controls:

SUFFIX	Optional Built-In Controls	USE CASE(S)	RATINGS & DESCRIPTION
T*	Single-Pole Thermostat	Ideal for 120v and 277v heaters	Rated 25 amps @ 120–240 VAC and 22 amps @ 277 VAC. Pilot duty rating of 125 VA (all voltages). 60–120°F temperature range; adjustable through outlet grille-tamper-resistant
2T*	Double-Pole Thermostat	Ideal for 208v and 240v heaters	Rated 25 amps @ 120–240 VAC and 22 amps @ 277 VAC. Pilot duty rating of 125 VA (all voltages). 60–120°F temperature range; adjustable through outlet grille-tamper-resistant. (See Note 1 for amperage restrictions.)
DS*	Power On/Off Switch	Ideal for servicing	Double-pole, rated 20 amp @ 120-277 VAC
TR*	Transformer Relay	Ideal for remote, low voltage thermostats	Single-pole, low voltage relay with built-in transformer (24 VAC control). Rated 22 amps @ 120–240 VAC and 19 amps @ 277 VAC. 18 amps @ 347V . Not available on 3-phase heaters
PR*	Power Relay	Ideal for multiple heater connections or BMS / EMS connections	Single-pole magnetic relay, rated. (See Note 3) Specify control voltage. Rated 30 amps @ 120–240 VAC and 30 amps @ 277 VAC. Pilot duty rating of 125 VA — all voltages (See Note 3)

* Addition To Basic Catalog No.

NOTE: For 347V and 600V units options T, 2T, DS, are not available. Specify PDT as the suffix for a thermostat. *Factory built-in. Add suffix to heater catalog number. 1) A control combination is not available on heaters that have an amperage draw which exceeds the rated limit of the lowest rated control. 2) For non-standard controls or combinations, contact factory. 3) Specify holding coil voltage where applicable.

NEMA 4X NOTE: Optional built-in controls are not compatible with the NEMA 4X Series. Standard 50-day lead time for NEMA 4X models. Contact sales representative for more information on NEMA 4X models.

*Optional Accessories:**

SUFFIX	Optional Built-In Controls	RATINGS & DESCRIPTION
ICSTIC	2	Inside corner (requires additional wall space — use with ST model only)
ICSTOC	2	Outside corner (requires additional wall space — use with ST model only)
ICSTJS	1	Splice plate wide, coverage gap up to ½ in. (use with ST model only)
STO2BS	—	2 ft. Blank Section (unheated section)
STO4BS	—	4 ft. Blank Section (unheated section)
STO6BS	—	6 ft. Blank Section (unheated section)
STO8BS	—	8 ft. Blank Section (unheated section)

* Add suffix for the appropriate color code (i.e. W for white, B for black, etc.).



NEMA 4x Model Stainless Steel

Dimensions and Clearances:

WATTS	A	B	NO. OF HOLES
500	28″	—	—
750	36″	—	—
1000	48″	19″	2
1250	60″	16.68″	4
1500	72″	20.63″	4
2000	96″	21.5″	6
2500	120″	27.5″	6

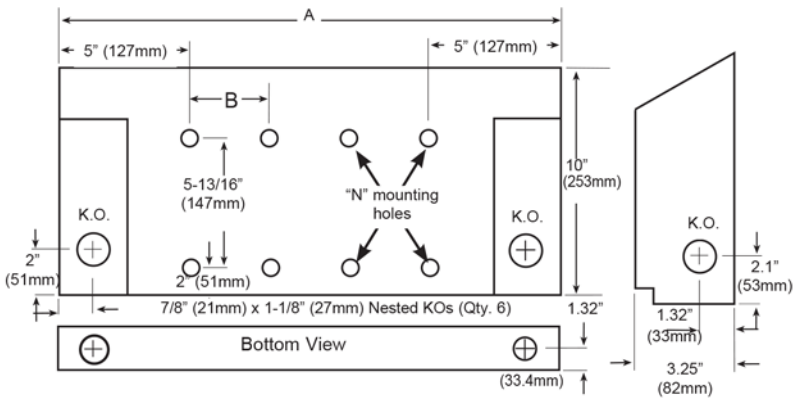

QMARK A Marley Engineered Products Brand
rev: Aug 2026

ADDITIONAL CONTROLS
For Convector Heaters

Two types of control sections are available:

- Control sections are 28" long and available in 7" high and 14" high steel models, as well DBA and SHA aluminum models
- An SCR control section which may include one or combinations of Master and Slave SCR's with an SCR type thermostat, or a Control Transformer

To develop a complete catalog number, first start with the catalog number of the selected Blank Control Section. Then add slash marks to separate the catalog numbers that describe the individual controls desired. Also specify finish, heater voltage, phase 1 or 3, and control voltage. All control sections are fully custom, factory made-to-order per application and therefore, all mounting locations, incoming power locations etc, must be verified by MEP engineering.

Example:
CSH07BCS1/TR24/2CB3P30.

This example catalog number would be for a 7-inch Commercial Style Grille Steel Convector control section with a 24v transformer relay, two 3-pole 30 amp Circuit Breakers.

Blank Control Section[1]:

CATALOG NO.	DESCRIPTION	SIZE	INLET / OUTLET
DBA3BCSF	Aluminum Draft Barrier Style Control Section	3 ⅝ x 6 x 28 in.	Front Inlet
DBA3BCSB		3 ⅝ x 6 x 28 in.	Bottom Inlet
SHABCSF		5 ⅜ x 7 x 28 in.	Front Inlet
SHABCSB		5 ⅜ x 7 x 28 in.	Bottom Inlet
CSH07BCS1	Steel Commercial Style Control Section	7 in. High	Bottom Inlet/Top Outlet
CSH14BCS1		14 in. High	Bottom Inlet/Top Outlet
CSH14BCS3		14 in. High	Bottom Inlet/Front Outlet
DSH07BCS1		7 in. High	Bottom Inlet/Top Outlet
DSH14BCS1		14 in. High	Bottom Inlet/Top Outlet
DSH07BCS2	Steel Decorative Style Control Section	7 in. High	Front Inlet/Top Outlet
DSH14BCS2		14 in. High	Front Inlet/Top Outlet

Control Transformer, 50 VA Rating:

CATALOG NO.	DESCRIPTION
TR24	240/208V Primary, 24V Secondary Step Down Transformer
TR27	277V Primary, 24V Secondary Step Down Transformer

Thermostat & Receptacle:

CATALOG NO.	DESCRIPTION
1PDT	Single-Pole Pilot Duty Thermostat, 60°-120°F Temperature Range–125 VA Rating
2PDT	Two-Stage Pilot Duty Thermostat, 60°-120°F Temperature Range–125 VA Rating. Available on 2- or 3-element, single-phase heaters only.
2ST	Two-Stage Thermostat 60-120°F temperature range, adjustable through outlet grille-tamper-resistant. Available on 2- or 3-element, single phase heaters only.
R	120V Receptacle Duplex receptacle, 120V/20A, mounting in left or right end cap of Steel Convectors only. For Alum. Convectors verify locations with factory.

Power On/Off Switch:

CATALOG NO.	DESCRIPTION
DS	Pilot Duty Power On/Off Switch; Double-Pole (Disconnects relay holding coil circuit)

Circuit Breakers[2]:

CATALOG NO.	DESCRIPTION	AMPERAGE	VOLTAGE
1CB2P30	(1) Three-Pole Circuit Breaker	30 Amps	208, 240, 277 VAC
1CB2P60	(1) Two-Pole Circuit Breaker	60 Amps	
1CB3P30	(1) Three-Pole Circuit Breaker	30 Amps	
1CB3P60	(1) Three-Pole Circuit Breaker	60 Amps	
2CB2P30	(2) Two-Pole Circuit Breaker	30 Amps	
2CB2P60	(2) Two-Pole Circuit Breaker	60 Amps	
2CB3P30	(2) Three-Pole Circuit Breaker	30 Amps	
2CB3P60	(2) Three-Pole Circuit Breaker	60 Amps	

SCR Controls[2] – Lead:

CATALOG NO.	DESCRIPTION
M90525A	Lead SCR Control Rated 25 Amps @120 – 480V AC. Lead units accept 0-10V DC, 4-20mA, or 135 OHM proportional control inputs. Each Lead SCR can provide low voltage signal to Follower SCR(s)[4]
M90548A	Lead SCR Control Rated 48 Amps @120 – 480V AC
M90548A-2	3-phase Lead SCR Control Rated 48 Amps @120 – 480V AC

SCR Controls[2] – Follower:

CATALOG NO.	DESCRIPTION
S90525A	SCR Follower unit controller. Rated 25 Amps.
S90548A	SCR Follower unit controller. Rated 48 Amps

SCR Thermostat[4]:

CATALOG NO.	DESCRIPTION
T90613V	Provides a proportional 2–10 VDC output for controlling 0–100% of the connected load to each Lead SCR 4.

NOTE: Each SCR incorporates its own zero-firing logic, providing any combination or connection arrangement for single or three phase applications. 25A single phase SCR can be mounted in the SHA aluminum convector. Each Master and Thermostat will require 24V AC Transformer. Specify holding coil voltage where applicable. On all 5 in. high steel convectors the two-pole thermostat must go in the right hand junction box (TR must mount in RH junction box. 2T+TR are invalid in 5 in. high steel convectors).

(1) Blank control sections are subject to the same color selections and pricing as the appropriate matching heater. (2) Not available in DBA control sections. (4) Maximum of 8 SCRs is the limit for one thermostat output signal.

When failure is NOT an option

HAZARDOUS ENVIRONMENT PRODUCTS
MARLEY CUSTOM CAPABILITIES

Harsh heaters are ideal for hazardous environments where the presence of flammable gases, vapor or dust exist.

QWD SERIES WASHDOWN UNIT HEATER

Water Resistant Construction for Easy Cleaning

NEMA 4 box to protect controls

Epoxy coating available for corrosion resistance



GUX SERIES EXPLOSION-PROOF UNIT HEATER

Explosion proof for heat-sensitive areas

High-temp limit devices to avoid over temp situations

Motor is thermally protected and permanently lubricated

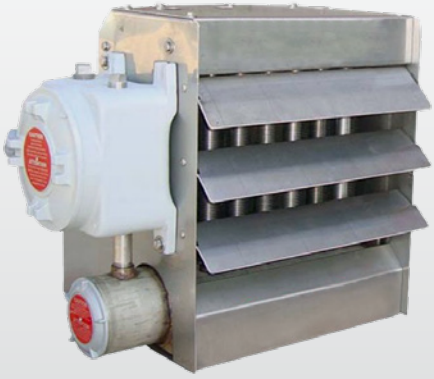

QX SERIES EXPLOSION-PROOF CONVECTOR

Explosion proof for heat-sensitive areas

High-temp limit devices to avoid over temp situations

Low-maintenance construction with no moving parts

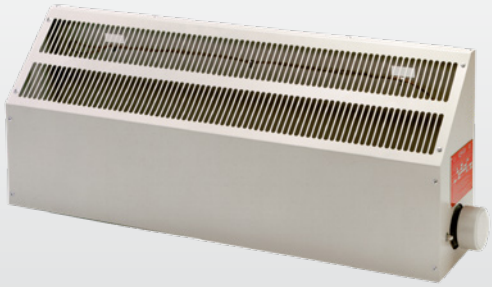









*Customizations not available for all products.

QWD SERIES
Washdown Corrosion-Resistant Unit Heater



Crafted for **wet and corrosive environments**, this heater can withstand **direct spray down** with a hose all the way to the harsh environment of a **chemical plant**.

Key Features:

Brave the Elements

Comes with NEMA 4X junction box and epoxy coated enclosed ball bearing motor to protect against water and dust. Add in the additional epoxy coating for advanced corrosion resistance.

Designed with Comfort in Mind

316 Stainless Steel-finned elements for improved heat distribution so the heat reaches where you need it to be.

Fast and Easy Installation

14-gauge Stainless Steel wall/ceiling bracket provides multiple options for mounting and allows unit to swivel. 24VAC controls improve safety with low voltage remote thermostat.

Built to Last

This heater is built out of 16 gauge 304 stainless steel and comes with an automatic high temperature reset limit to protect against overtemp situations.

Technical Specifications:

Temp Range: 40°–120°F
CFM: 700–2400

Ideal Spaces:

Car Washes
Cement Plants
Coal Handling Areas
Dairies & Food Processing Plants
Marine & Offshore
Power Generating Stations
Steel Mills & Foundries
Swimming Pool Areas
Wastewater Treatment Plants

Stainless Steel

Scan the QR code to access additional specs and features.

rev: Aug 2026

QWD SERIES
Washdown Corrosion-Resistant Unit Heater

Models & Specifications:

	ITEM INFORMATION	ELECTRICAL DATA				MOTOR			AIR FLOW			2-STAGE CONTROL	SHIP WT.
	CATALOG NO.	VOLTS	PHASE	TOTAL AMPS*	KW	HP	VOLTS	PHASE	RISE**	CFM	THROW		
●	QWD02112	120	1	16.7	2.0	—	120	1	9°F	700	—	N/A	60 lbs
●	QWD02812	208	1	9.6		—	208	1	9°F	700	—	N/A	60 lbs
●	QWD02212	240	1	8.3		—	240	1	9°F	700	—	N/A	60 lbs
●	QWD03112	120	1	25	3.0	—	120	1	14°F	700	—	N/A	60 lbs
●	QWD03812	208	1	14.4		—	208	1	14°F	700	—	N/A	60 lbs
●	QWD03212	240	1	12.5		—	240	1	14°F	700	—	N/A	60 lbs
●	QWD03712	277	1	10.8		—	277	1	14°F	700	—	N/A	60 lbs
●	QWD03832	208	3	8.3		—	208	1	14°F	700	—	N/A	60 lbs
●	QWD03232	240	3	7.2		—	240	1	14°F	700	—	N/A	60 lbs
●	QWD03432	480	3	3.6		—	480	1	14°F	700	—	N/A	60 lbs
●	QWD05812	208	1	24	5.0	—	208	1	23°F	700	—	N/A	60 lbs
●	QWD05212	240	1	20.8		—	240	1	23°F	700	—	N/A	60 lbs
●	QWD05712	277	1	18.1		—	277	1	23°F	700	—	N/A	60 lbs
●	QWD05412	480	1	10.4		—	480	1	23°F	700	—	N/A	60 lbs
●	QWD05832	208	3	13.9		—	208	1	23°F	700	—	N/A	60 lbs
●	QWD05232	240	3	12		—	240	1	23°F	700	—	N/A	60 lbs
●	QWD05432	480	3	6		—	480	1	23°F	700	—	N/A	60 lbs
●	QWD07812	208	1	36.1	7.5	—	208	1	34°F	700	—	N/A	60 lbs
●	QWD07212	240	1	31.3		—	240	1	34°F	700	—	N/A	60 lbs
●	QWD07712	277	1	27.1		—	277	1	34°F	700	—	N/A	60 lbs
●	QWD07412	480	1	15.6		—	480	1	34°F	700	—	N/A	60 lbs
●	QWD07832	208	3	20.8		—	208	1	34°F	700	—	N/A	60 lbs
●	QWD07232	240	3	18		—	240	1	34°F	700	—	N/A	60 lbs
●	QWD07432	480	3	9		—	480	1	34°F	700	—	N/A	60 lbs
●	QWD10212	240	1	41.7	10	—	240	1	22°F	1450	—	N/A	60 lbs
●	QWD10712	277	1	36.1		—	277	1	22°F	1450	—	N/A	60 lbs
●	QWD10412	480	1	20.8		—	480	1	22°F	1450	—	N/A	60 lbs
●	QWD10832	208	3	27.8		—	208	1	22°F	1450	—	N/A	60 lbs
●	QWD10232	240	3	24.1		—	240	1	22°F	1450	—	N/A	60 lbs
●	QWD10432	480	3	12		—	480	1	22°F	1450	—	N/A	60 lbs
●	QWD12812	208	1	60.1	12.5	—	208	1	27°F	1450	—	N/A	60 lbs
●	QWD12212	240	1	52.1		—	240	1	27°F	1450	—	N/A	60 lbs
●	QWD12832	208	3	34.7		—	208	1	27°F	1450	—	N/A	60 lbs
●	QWD12232	240	3	30.1		—	240	1	27°F	1450	—	N/A	60 lbs
●	QWD12432	480	3	15		—	480	1	27°F	1450	—	N/A	60 lbs
●	QWD-234-U11L-0150I	347	1	47	15	¼	347	1	21°F	2400	50′	1A	130 lbs
●	QWD-234-U11L-0150D	208	3	44		¼	208	1	21°F	2400	50′	1A	130 lbs
●	QWD-234-U11L-0150K	240	3	39		¼	240	1	21°F	2400	50′	1A	130 lbs
●	QWD-234-U11L-0150U	480	3	20		¼	480	1	21°F	2400	50′	1A	130 lbs
●	QWD-234-U11L-0150Z	600	3	16		¼	600	1	21°F	2400	50′	1A	130 lbs
●	QWD-234-U11L-0200U	480	3	26	20	¼	480	1	28°F	2400	50′	1A	130 lbs
●	QWD-234-U11L-0200Z	600	3	21		¼	600	1	28°F	2400	50′	1A	130 lbs
●	QWD-234-U11A-0250U	480	3	32	25	¼	480	1	35°F	2400	50′	1B	130 lbs
●	QWD-234-U11A-0250Z	600	3	26		¼	600	1	35°F	2400	50′	1B	130 lbs
●	QWD-234-U11A-0300U	480	3	38	30	¼	480	1	42°F	2400	50′	1B	130 lbs
●	QWD-234-U11A-0300Z	600	3	31		¼	600	1	42°F	2400	50′	1B	130 lbs
●	QWD-234-U11A-0350U	480	3	44	35	¼	480	1	48°F	2400	50′	1B	130 lbs
●	QWD-234-U11A-0350Z	600	3	35		¼	600	1	48°F	2400	50′	1B	130 lbs
●	QWD-234-U11A-0390U	480	3	48	38.4	¼	480	1	54°F	2400	50′	1B	130 lbs
●	QWD-234-U11A-0390Z	600	3	38		¼	600	1	54°F	2400	50′	1B	130 lbs
●	QWD-234-U11A-0470Z	600	3	47	47	¼	600	1	64°F	2400	50′	1B	130 lbs

SKU Legend: ◆ **= Popular Products** ● **= Extended Offering** ■ **= Made to Order** (Contact your local Marley Sales Representative for typically associated lead times)

Note: Stock heaters ordered with custom options subject to longer delivery. *Total Amps = Heating element and motor amps. **Approximate air temperature rise.

2-Stage heaters can be field wired as single stage. 1A = Optional 2-stage control, unbalanced (option 'X'). 1B = Optional 2-stage control, balanced (option 'X')

QWD SERIES
Washdown Corrosion-Resistant Unit Heater

Factory Built-in Options—2kW–12.5kW Models:

	SUFFIX	DESCRIPTION
●	T	Thermostat
●	L	Pilot Light
●	S	Selector Switch
●	D	Disconnect Switch
●	M	Manual Reset
●	P	Epoxy Coating

SKU Legend: ◆ **= Popular Products** ● **= Extended Offering** ■ **= Made to Order** (Contact your local Marley Sales Representative for typically associated lead times)
NOTE: Monel elements are subject to longer lead times. Please contact factory for details. All units other than standard models are non-returnable.

Factory Built-in Options—15kW–47kW Models:

	CATALOG NO.	DESCRIPTION
●	B	Delete swivel mounting bracket. Heater installs from the ceiling with field furnished threaded rods
●	D	Power disconnect switch
■	F8	Fan motor fusing with disconnecting contactor
●	L	"Heater on" pilot light
●	M	Secondary manual reset overtemperature cutout. Required for U.S. Coast Guard and ABS Approved designs
●	S	Three-position selector switch (heater-standby-fan)
●	T	1-Stage Built-in thermostat 40° to 100° F
■		2-Stage Built-in thermostat 40° to 120° F. ***Must be installed with 2-Stage Control, X***
●	V	120 volt control circuit
■	X	2-Stage Control

SKU Legend: ◆ **= Popular Products** ● **= Extended Offering** ■ **= Made to Order** (Contact your local Marley Sales Representative for typically associated lead times)

Remote Room Thermostat:

CATALOG NO.	SWITCH TYPE	TYPE	RATING	TEMP RANGE	TAMPERPROOF	THERMOMETER	AMPS	PILOT DUTY	COMPATIBILITY
WT11A	Positive snap action switch	SPDT	NEMA 4X rated	40°F–110°F	No	No	25A @ 120–277V	125VA	2kW–12.5kW
1004328	Bulb	SPDT	NEMA 4X	40°–110°F	No	No	25A @ 120-240V 22A @ 277V	125VA	15kW–47kW
1026347	2-Stage Bulb	2 SPDT	NEMA 4X	40°–100°F	No	No	25A @ 120-240V 22A @ 277V	125VA	

QMARK A Marley Engineered Products Brand
rev: Aug 2026

QWD SERIES
Washdown Corrosion-Resistant Unit Heater

Dimensions and Clearances: 2kW–12.5kW Models

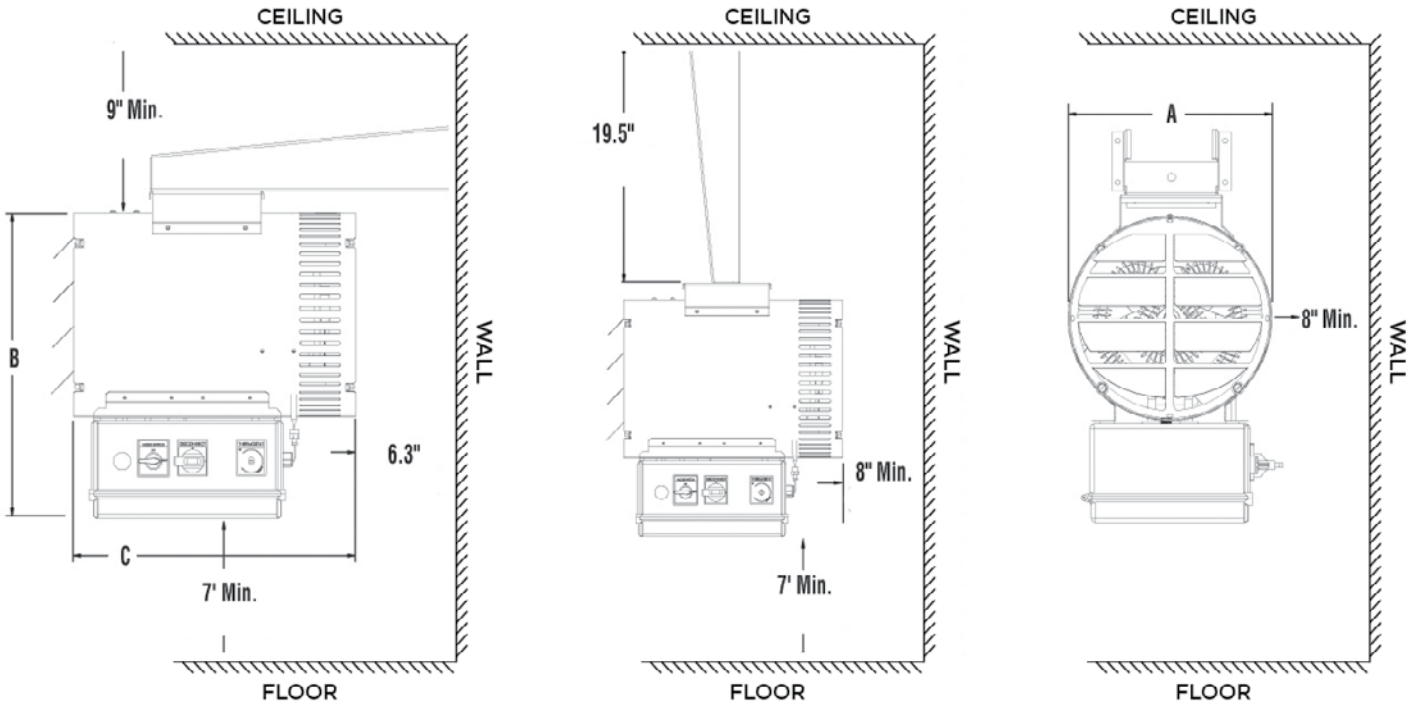

KW	A	B	C	D
2–10	13″	19 ½″	18″	19 ½″
12.5	20″	31″	27″	24 ⅕″

Dimensions and Clearances: 15kW–47kW Models

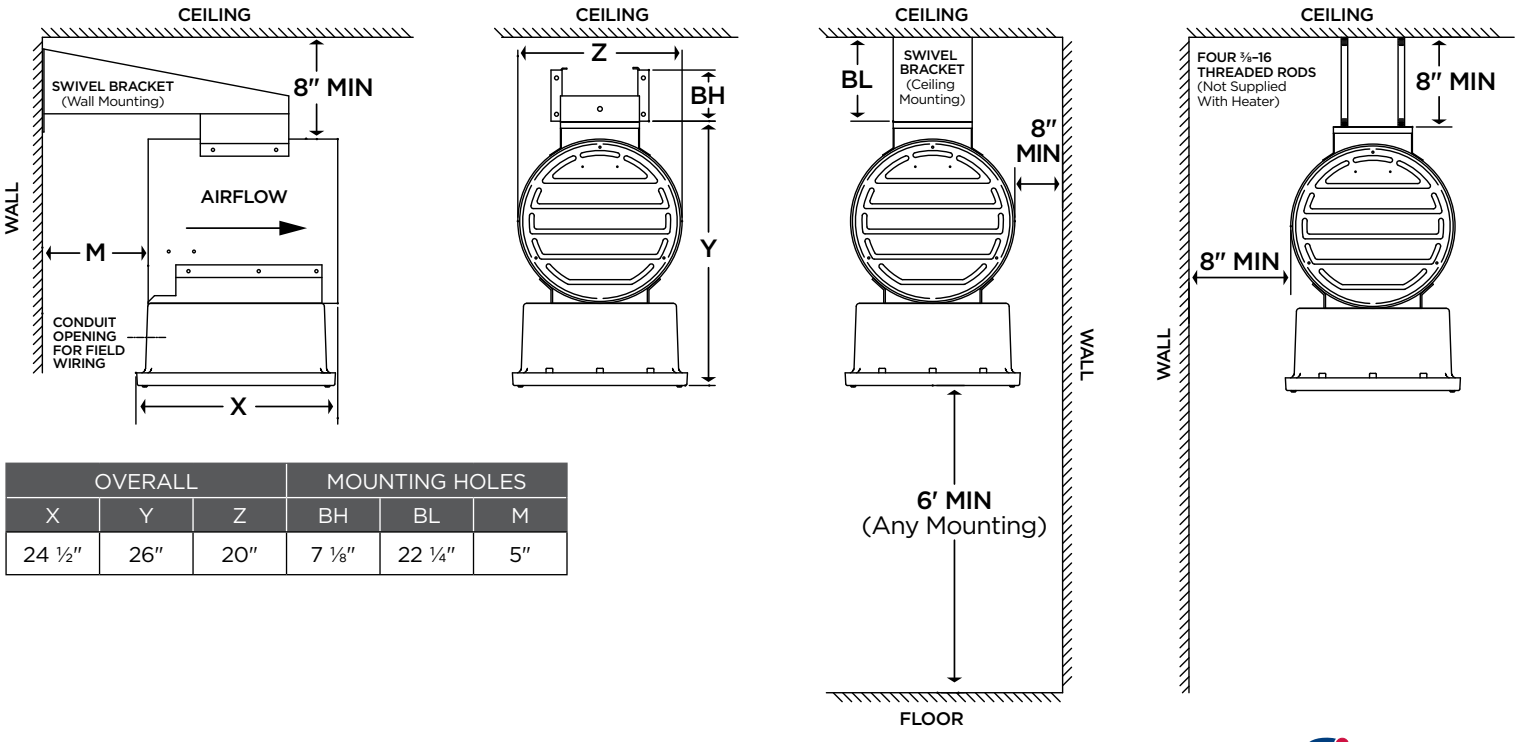

OVERALL			MOUNTING HOLES		
X	Y	Z	BH	BL	M
24 ½″	26″	20″	7 ⅛″	22 ¼″	5″

QMARK A Marley Engineered Products Brand
rev: Aug 2026

GUX SERIES
Explosion-Proof Unit Heater

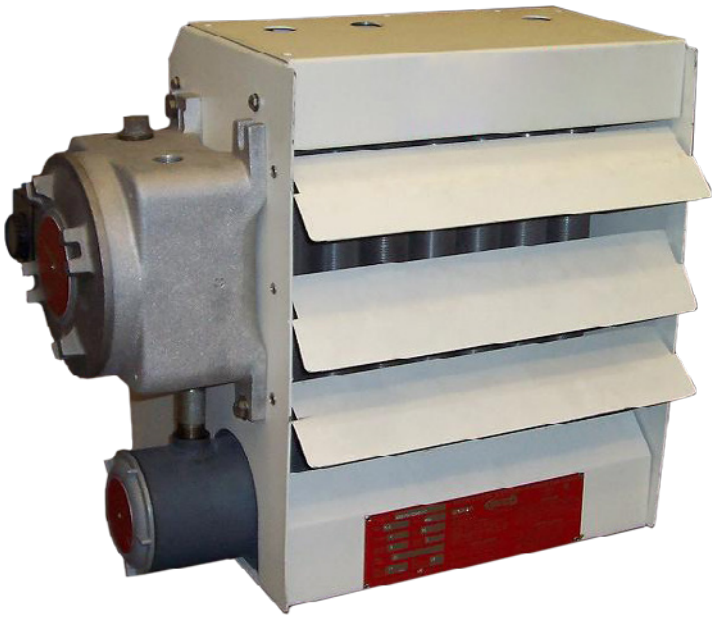

This heater was specifically designed to heat areas classified as hazardous locations and comes with a **thermally-protected motor** so you get heat fast and consistent while maintaining **top-of-the-line safety**.

Key Features:

Designed with Safety in Mind

Heater was designed to meet Class I, Groups C, and D, Division 1 and 2 or Class II, Groups E, F, and G, Division 1 and 2 and has a low operating temperature for atmospheres having an ignition temperature higher than 165°C (329°F)—code T3B

Innovative Design

Advanced heat exchanger design allows lower operating temperatures from liquid to air heat exchanger with steel tubes, aluminum fins, a non-toxic heat transfer fluid, and a pressure relief plug

Safety Comes Standard

Pre-wired, self-contained control center. Standard controls include automatic reset thermal limit, magnetic contactor, and 24V control circuit transformer with optional built-in thermostat, disconnect switch, pilot light, and manual reset

Built to Last

Powder-coated heavy-gauge steel cabinet surrounding 14-gauge heavy-duty steel frame supports internal components such as the permanently lubricated ball bearings and thermally protected explosion-proof motor

Technical Specifications:

Temp Range: 50°–120°F (10°–49°C)
CFM: 550–3850

Classes:

Class I, Divisions 1 and 2, Groups C & D
Class II, Divisions 1 and 2, Groups E, F & G
Class I, Zones 1 and 2, Group IIB

Ideal Spaces:

Aircraft Hangars/Service Areas
Chemical Storage/Handling Areas
Coal Preparation Plants
Compressor Stations
Grain Elevators
Petrochemical Plants
Oil Refineries & Rigs
Paint Storage Areas
Spray Booths

C US

Beige

Scan the QR code to access additional specs and features.

QMARK A Marley Engineered Products Brand
rev: Aug 2026

GUX SERIES
Explosion-Proof Unit Heater

60 Hz Models & Specifications:

ITEM INFORMATION		ELECTRICAL DATA				MOTOR			AIR FLOW			FRAME SIZE	SHIP WT.
	CATALOG NO.	VOLTS	PHASE	TOTAL AMPS*	KW	HP	RPM	FAN BLADE DIAMETER	RISE**	CFM	THROW		
●	GUX-233-FA-0036C	208	1	17	3.0	¼	1725	12″	15°F	650	15″	1	130 lbs
●	GUX-233-FA-0036J	240	1	15		¼	1725	12″	15°F	650	15″	1	130 lbs
●	GUX-233-FA-0036D	208	3	10		¼	1725	12″	15°F	650	15″	1	130 lbs
●	GUX-233-FA-0036K	240	3	9		¼	1725	12″	15°F	650	15″	1	130 lbs
●	GUX-233-FA-0036U	480	3	5		¼	1725	12″	15°F	650	15″	1	130 lbs
●	GUX-233-FA-0036Z	600	3	4		¼	1725	12″	15°F	650	15″	1	130 lbs
●	GUX-233-FA-0056C	208	1	26	5.0	¼	1725	12″	25°F	650	15″	1	130 lbs
●	GUX-233-FA-0056J	240	1	23		¼	1725	12″	25°F	650	15″	1	130 lbs
●	GUX-233-FA-0056D	208	3	16		¼	1725	12″	25°F	650	15″	1	130 lbs
●	GUX-233-FA-0056K	240	3	14		¼	1725	12″	25°F	650	15″	1	130 lbs
●	GUX-233-FA-0056U	480	3	7		¼	1725	12″	25°F	650	15″	1	130 lbs
●	GUX-233-FA-0056Z	600	3	6		¼	1725	12″	25°F	650	15″	1	130 lbs
●	GUX-233-FA-0086C	208	1	38	7.5	¼	1725	12″	28°F	850	25″	1	130 lbs
●	GUX-233-FA-0086J	240	1	34		¼	1725	12″	28°F	850	25″	1	130 lbs
●	GUX-233-FA-0086D	208	3	23		¼	1725	12″	28°F	850	25″	1	130 lbs
●	GUX-233-FA-0086K	240	3	20		¼	1725	12″	28°F	850	25″	1	130 lbs
●	GUX-233-FA-0086U	480	3	10		¼	1725	12″	28°F	850	25″	1	130 lbs
●	GUX-233-FA-0086Z	600	3	9		¼	1725	12″	28°F	850	25″	1	130 lbs
●	GUX-233-FA-0106J	240	1	44	10	¼	1725	12″	38°F	850	25″	1	130 lbs
●	GUX-233-FA-0106D	208	3	30		¼	1725	12″	38°F	850	25″	1	130 lbs
●	GUX-233-FA-0106K	240	3	26		¼	1725	12″	38°F	850	25″	1	130 lbs
●	GUX-233-FA-0106U	480	3	13		¼	1725	12″	38°F	850	25″	1	130 lbs
●	GUX-233-FA-0106Z	600	3	11		¼	1725	12″	38°F	850	25″	1	130 lbs
●	GUX-233-FB-0156D	208	3	44	15	¼	1725	16″	27°F	1800	45″	2	169 lbs
●	GUX-233-FB-0156K	240	3	38		¼	1725	16″	27°F	1800	45″	2	169 lbs
●	GUX-233-FB-0156U	480	3	19		¼	1725	16″	27°F	1800	45″	2	169 lbs
●	GUX-233-FB-0156Z	600	3	16		¼	1725	16″	27°F	1800	45″	2	169 lbs
●	GUX-233-FB-0206U	480	3	25	20	¼	1725	16″	35°F	1800	45″	2	169 lbs
●	GUX-233-FB-0206Z	600	3	21		¼	1725	16″	35°F	1800	45″	2	169 lbs
●	GUX-233-FC-0256U	480	3	31	25	½	1725	20″	26°F	3110	65″	3	216 lbs
●	GUX-233-FC-0256Z	600	3	25		½	1725	20″	26°F	3110	65″	3	216 lbs
●	GUX-233-FC-0306U	480	3	37	30	½	1725	20″	25°F	3850	75″	3	216 lbs
●	GUX-233-FC-0306Z	600	3	30		½	1725	20″	25°F	3850	75″	3	216 lbs
●	GUX-233-FC-0356U	480	3	43	35	½	1725	20″	29°F	3850	75″	3	216 lbs
●	GUX-233-FC-0356Z	600	3	35		½	1725	20″	29°F	3850	75″	3	216 lbs

SKU Legend: ◆ **= Popular Products** ● **= Extended Offering** ■ **= Made to Order** (Contact your local Marley Sales Representative for typically associated lead times)
*Total Amps = Heating element and motor amps. **Approximate air temperature rise

GUX SERIES
Explosion-Proof Unit Heater

50 Hz Models & Specifications:

ITEM INFORMATION		ELECTRICAL DATA				MOTOR			AIR FLOW			FRAME SIZE	SHIP WT.
	CATALOG NO.	VOLTS	PHASE	TOTAL AMPS	KW	HP	RPM	FAN BLADE DIAMETER	RISE**	CFM	THROW		
■	GUX-233-FA-0036E	220	1	14	2.5	¼	1438	12″	14°F	550	13″	1	130 lbs
■	GUX-233-FA-0036F	220	3	9		¼	1438	12″	14°F	550	13″	1	130 lbs
■	GUX-233-FA-0036G	380	3	6		¼	1438	12″	14°F	550	13″	1	130 lbs
■	GUX-233-FA-0036H	400	3	6		¼	1438	12″	14°F	550	13″	1	130 lbs
■	GUX-233-FA-0036I	415	3	5		¼	1438	12″	14°F	550	13″	1	130 lbs
■	GUX-233-FA-0056E	220	1	21	4.2	¼	1438	12″	24°F	550	13″	1	130 lbs
■	GUX-233-FA-0056F	220	3	13		¼	1438	12″	24°F	550	13″	1	130 lbs
■	GUX-233-FA-0056G	380	3	9		¼	1438	12″	24°F	550	13″	1	130 lbs
■	GUX-233-FA-0056H	400	3	8		¼	1438	12″	24°F	550	13″	1	130 lbs
■	GUX-233-FA-0056I	415	3	7		¼	1438	12″	24°F	550	13″	1	130 lbs
■	GUX-233-FA-0076E	220	1	31	6.3	¼	1438	12″	28°F	700	22″	1	130 lbs
■	GUX-233-FA-0076F	220	3	19		¼	1438	12″	28°F	700	22″	1	130 lbs
■	GUX-233-FA-0076G	380	3	12		¼	1438	12″	28°F	700	22″	1	130 lbs
■	GUX-233-FA-0076H	400	3	11		¼	1438	12″	28°F	700	22″	1	130 lbs
■	GUX-233-FA-0076I	415	3	10		¼	1438	12″	28°F	700	22″	1	130 lbs
■	GUX-233-FA-0096E	220	1	40	8.4	¼	1438	12″	38°F	700	22″	1	130 lbs
■	GUX-233-FA-0096F	220	3	24		¼	1438	12″	38°F	700	22″	1	130 lbs
■	GUX-233-FA-0096G	380	3	15		¼	1438	12″	38°F	700	22″	1	130 lbs
■	GUX-233-FA-0096H	400	3	13		¼	1438	12″	38°F	700	22″	1	130 lbs
■	GUX-233-FA-0096I	415	3	13		¼	1438	12″	38°F	700	22″	1	130 lbs
■	GUX-233-FB-0136F	220	3	35	12.5	¼	1438	16″	26°F	1500	39″	2	169 lbs
■	GUX-233-FB-0136G	380	3	21		¼	1438	16″	26°F	1500	39″	2	169 lbs
■	GUX-233-FB-0136H	400	3	19		¼	1438	16″	26°F	1500	39″	2	169 lbs
■	GUX-233-FB-0136I	415	3	18		¼	1438	16″	26°F	1500	39″	2	169 lbs
■	GUX-233-FB-0176F	220	3	46	16.7	¼	1438	16″	35°F	1500	39″	2	169 lbs
■	GUX-233-FB-0176G	380	3	28		¼	1438	16″	35°F	1500	39″	2	169 lbs
■	GUX-233-FB-0176H	400	3	25		¼	1438	16″	35°F	1500	39″	2	169 lbs
■	GUX-233-FB-0176I	415	3	24		¼	1438	16″	35°F	1500	39″	2	169 lbs
■	GUX-233-FC-0216G	380	3	33	21	½	1438	20″	26°F	2600	57″	3	216 lbs
■	GUX-233-FC-0216H	400	3	32		½	1438	20″	26°F	2600	57″	3	216 lbs
■	GUX-233-FC-0216I	415	3	31		½	1438	20″	26°F	2600	57″	3	216 lbs
■	GUX-233-FC-0256G	380	3	39	25	½	1438	20″	30°F	2600	57″	3	216 lbs
■	GUX-233-FC-0256H	400	3	37		½	1438	20″	30°F	2600	57″	3	216 lbs
■	GUX-233-FC-0256I	415	3	36		½	1438	20″	30°F	2600	57″	3	216 lbs

SKU Legend: ◆ **= Popular Products** ● **= Extended Offering** ■ **= Made to Order** (Contact your local Marley Sales Representative for typically associated lead times)
*Total Amps = Heating element and motor amps

GUX SERIES
Explosion-Proof Unit Heater

Factory Built-in Options:

	CATALOG NO.	OPTION	DESCRIPTION
●	D	Disconnect Switch	Factory installed on the unit heater above the control enclosure. This is an inexpensive and positive way to meet NEC/CEC requirements for a disconnecting means within sight of the heater.
●	K	"Warning" Pilot Light	Indicates when the thermal cutouts have tripped and the unit heater needs servicing. ***Not available with combination V & L***.
●	L	"Heater On" Pilot Light	Indicates when the electric heating elements are energized. ***Not available with combination V & K***
●	M	Manual Reset Thermal Cutout with Backup Contactor	A pilot duty manual reset thermal cutout with a backup contactor is provided for independent secondary overtemperature protection. ***Cannot be installed with S, S1 or V***.
●	S	Auto/Fan Selector Switch	A two-position switch wired to the control circuit for auto (automatic heat) and fan only control. ***Cannot be installed with M, V or S1***.
●	S1	Built-In Controls for Remote Auto/Fan Selector Switch	Unit is prewired for field addition of remote auto/fan selector switch. ***Cannot be installed with M, V or S***.
●	T	Adjustable Thermostat	Factory installed and prewired to the control enclosure. Thermostat is adjustable from 50° to 90° F (10° to 32°C).
●	T1	Adjustable Thermostat for Wet Locations	Factory installed and prewired to the control enclosure. Thermostat is adjustable from 40° to 80° F (5° to 25°C). Can be specified for all constructions.
●	V	120 Volt Control Circuit	Can be provided when required for special external thermostat circuit. ***Cannot be installed with S, S1, M or the combination of both K & L together***.

SKU Legend: ◆ **= Popular Products** ● **= Extended Offering** ■ **= Made to Order** (Contact your local Marley Sales Representative for typically associated lead times)

Note: Both pilot lights (K & L) are not available with 120V option (V). Only one pilot light can be ordered with 120V control heaters.

Standard Mounting Kits:

CATALOG NO.	DESCRIPTION
1022451	Ceiling Mounting Kit
1022454	Wall Mounting Kit
1022457	Pole Mounting Kit

Note: One kit required per heater. Work with all frame sizes

Accessory Remote Thermostats:

CATALOG NO.	SWITCH TYPE	TYPE	RATING	TEMP RANGE	DESCRIPTION
1007002	Bimetal	SPDT	125–277V, 22A	50°–90°F (10°–32°C)	Class 1, Div. 1, Groups C & D. Class II, Div. 1, Groups E, F, & G
QX-1024754	Bulb and Capillary with Internal Set Point Adjustment	SPDT	120–240V, 25A 277V, 22A	40°–120°F (5°–49°C)	Class 1, Div. 1, Groups B, C & D. Class II, Div. 1, Groups E, F, & G
QX-1025396		SPST	120–240V, 25A 277V, 22A	40°–120°F (5°–49°C)	Corrosion-Resistant Class 1, Div. 1, Groups B, C, & D. Class II, Div. 1, Groups E, F & G
1036506	Bimetal	SPDT	480V, 15A	40°–80°F (5°–25°C)	Class I, Div. 1, Groups C & D. Class II, Div. 1, Groups E, F, & G. Class III. IP66, Type 4

Remote Fan Switch:

CATALOG NO.	SWITCH TYPE	RATING	HUBS	DESCRIPTION
1001744	2-Position	120/277V, 30A	(2) ¾" NPT Hubs	Class I, Div. 1, Groups C & D. Class II, Div. 1, Groups E, F, & G. Class III
1031042	2-Position	110V, 6A		Class I, Div. 1, Groups C & D. Class II, Div. 1, Groups E, F, & G. Class III. NEMA 4X

GUX SERIES
Explosion-Proof Unit Heater

Dimensions and Clearances:

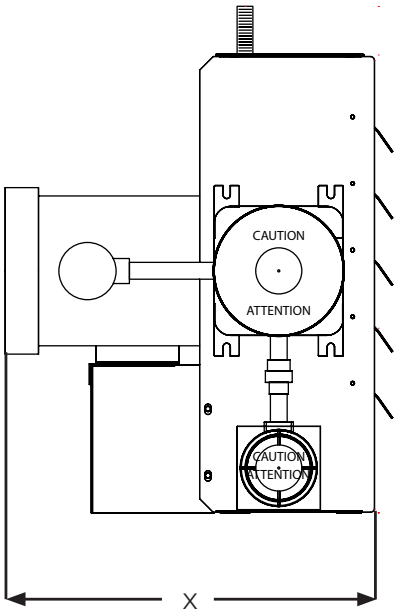

Side View

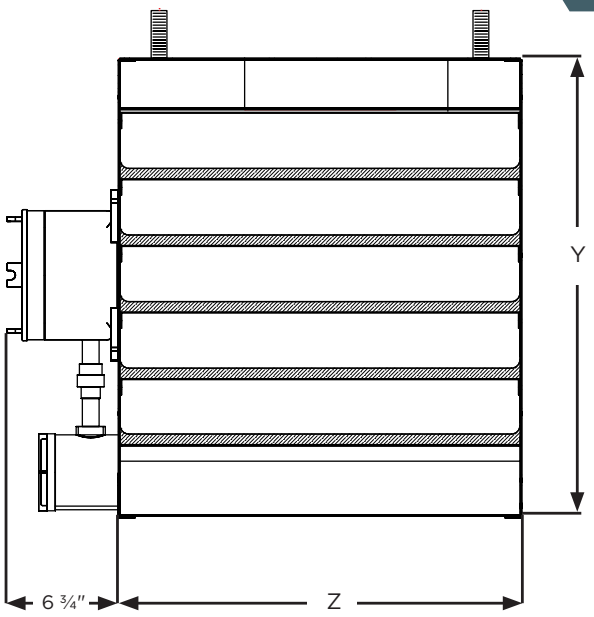

Front View

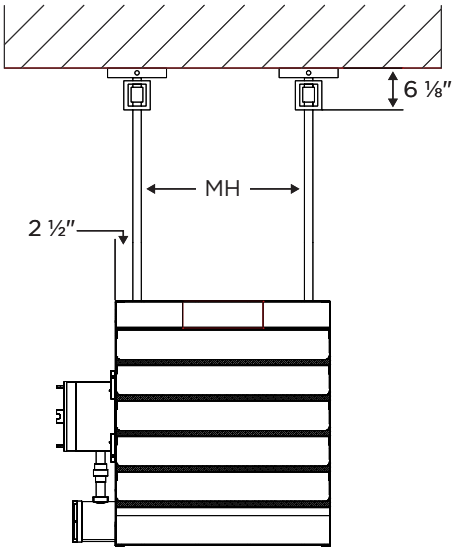

Ceiling Mounting Kit

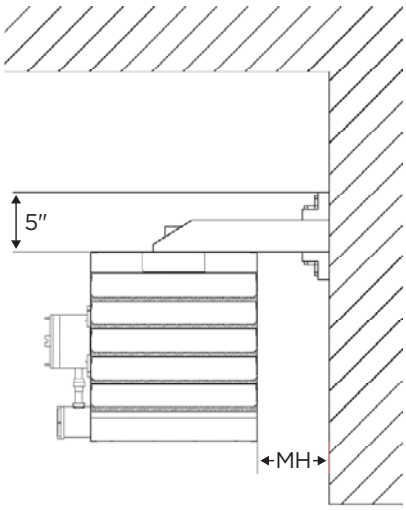

Wall Mounting Kit

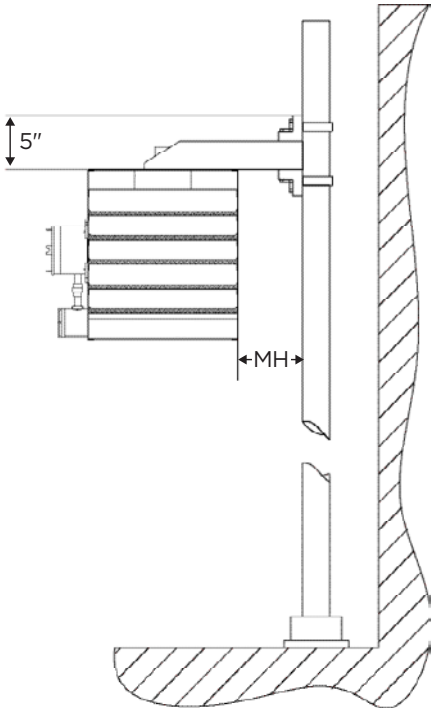

Pole Mounting Kit

SIZE	X	Y	Z	MH	MW
1	22 ½"	19 ⅜"	16 1⁄16"	11 1⁄16"	9"
2	22 ½"	23 ⅜"	20 3⁄16"	15 1⁄16"	7"
3	22 ¾"	27 ⅜"	24 3⁄16"	19 1⁄16"	5"

QMARK A Marley Engineered Products Brand
rev: Aug 2026

QX SERIES
Explosion-Proof Convector

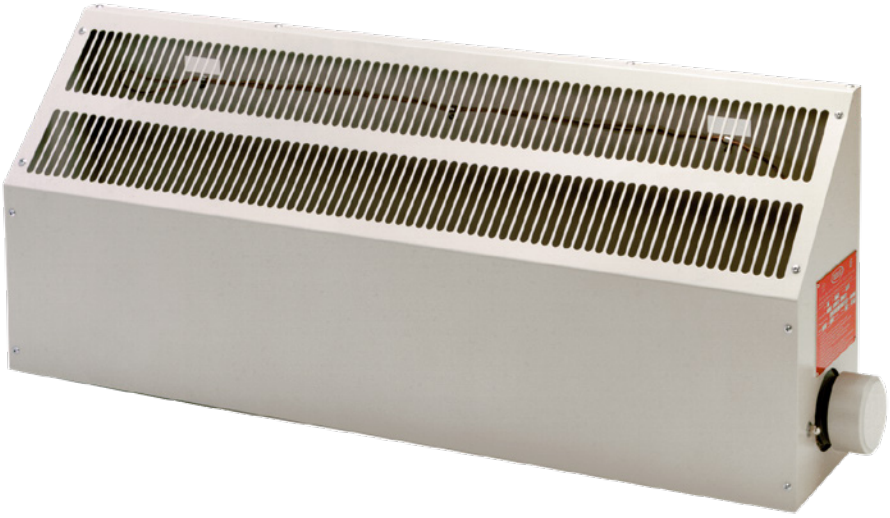

This heater was specifically designed to heat areas classified as hazardous locations and with **no moving parts** so you will have the peace of mind knowing this heater will keep your space warm while maintaining **top of the line safety**.

Key Features:

Designed with Safety in Mind

Heater was designed to meet Class I, Groups B, C, and D. Division 1 and 2 of Hazardous Environments and comes with a sloped top cabinet to prevent objects from restricting airflow.

Corrosion Resistant

Polyester powder-coating heavy-gauge steel provides excellent corrosion resistance.

High Grade Parts

High quality, long life tubular elements with high grade resistance wire embedded in MGO, centered in heavy gauge 1.25 in. diameter sheath with 3 x 3.25 in. fins and a sloped top.

Fast and Easy Installation

Explosion proof junction boxes and included wall mounting brackets make installation easy and quick.

Classes:

Class I, Divisions 1 & 2, Groups B, C & D
Class II, Divisions 1 & 2, Groups E, F & G
Class I, Zones 1 & 2, Groups IIB & H2

Ideal Spaces:

Battery Storage Areas
Chemical Plants
Coal Handling Facilities
Dry Cleaning Plants
Gasoline Fueling & Storage Areas
Grain Elevators
Oil Refineries
Paint Spraying & Storage Areas
Petrochemical Plants

C US

Beige

Scan the QR code to access additional specs and features.

rev: Aug 2026

QX SERIES
Explosion-Proof Convector

Class I, Divisions 1 & 2, Groups B, C & D
Class I, Zones 1 & 2 Groups IIB + H2
Ignition Temperature Code T2A, 536° F (280°C)

Models & Specifications:

ITEM INFORMATION		ELECTRICAL DATA				UNIT SIZE	OPTIONAL BUILT-ON CONTROLS		SHIP WT.**
	CATALOG NO.	VOLTS	PHASE	TOTAL AMPS	KW		CONTROLS ONLY	THERMOSTAT ONLY* OR THERMOSTAT WITH CONTROLS	
●	QX-254-F0310052B	120	1	4.2	0.5	1	—	1024754	13 lbs
●	QX-254-F0310052C	208	1	2.4			—	1024754	13 lbs
●	QX-254-F0310052J	240	1	2.1			—	1024754	13 lbs
●	QX-254-F0310052N	277	1	1.8			—	1024754	13 lbs
●	QX-254-F0310102B	120	1	8.3	1.0	1	—	1024754	13 lbs
●	QX-254-F0310102C	208	1	4.8			—	1024754	13 lbs
●	QX-254-F0310102J	240	1	4.2			—	1024754	13 lbs
●	QX-254-F0310102N	277	1	3.6			—	1024754	13 lbs
●	QX-254-F0320182B	120	1	15.0	1.8	2	Not Required	S2	13 lbs
●	QX-254-F0320182C	208	1	8.7			Not Required	S2	27 lbs
●	QX-254-F0320182J	240	1	7.5			Not Required	S2	27 lbs
●	QX-254-F0320182N	277	1	6.5			Not Required	S2	27 lbs
●	QX-254-F0320182I	347	1	5.2			B2	B3	27 lbs
●	QX-254-F0320182U	480	3	2.2			B2	B3	27 lbs
●	QX-254-F0320182Z	600	3	1.8			B2	B3	27 lbs
●	QX-254-F0320252C	208	1	12.0	2.5	2	Not Required	S2	27 lbs
●	QX-254-F0320252D	208	3	6.9			B2	B3	27 lbs
●	QX-254-F0320252J	240	1	10.4			Not Required	S2	27 lbs
●	QX-254-F0320252N	277	1	9.0			Not Required	S2	27 lbs
●	QX-254-F0320252I	347	1	7.2			B2	B3	27 lbs
●	QX-254-F0320252U	480	3	3.0			B2	B3	27 lbs
●	QX-254-F0320252Z	600	3	2.4			B2	B3	27 lbs
●	QX-254-F0330362C	208	1	17.3	3.6	3	Not Required	S2	36 lbs
●	QX-254-F0330362D	208	3	10.0			B2	B3	36 lbs
●	QX-254-F0330362J	240	1	15.0			Not Required	S2	36 lbs
●	QX-254-F0330362N	277	1	13.0			Not Required	S2	36 lbs
●	QX-254-F0330362I	347	1	10.4			B2	B3	36 lbs
●	QX-254-F0330362U	480	3	4.3			B2	B3	36 lbs
●	QX-254-F0330362Z	600	3	3.5			B2	B3	36 lbs
●	QX-254-F0330442D	208	3	12.2	4.4	3	B2	B3	36 lbs
●	QX-254-F0330442J	240	1	18.3			Not Required	S2	36 lbs
●	QX-254-F0330442N	277	1	15.9			Not Required	S2	36 lbs
●	QX-254-F0330442I	347	1	12.7			B2	B3	36 lbs
●	QX-254-F0330442U	480	3	5.3			B2	B3	36 lbs
●	QX-254-F0330442Z	600	3	4.3			B2	B3	36 lbs
●	QX-254-F0340652D	208	3	18.0	6.5	4	B2	B3	60 lbs
●	QX-254-F0340652J	240	3	27.1			B2	B3	60 lbs
●	QX-254-F0340652N	277	1	23.5			B2	B3	60 lbs
●	QX-254-F0340652I	347	1	18.7			B2	B3	60 lbs
●	QX-254-F0340652U	480	3	7.8			B2	B3	60 lbs
●	QX-254-F0340652Z	600	3	6.3			B2	B3	60 lbs
●	QX-254-F0340752D	208	3	20.8	7.5	4	B2	B3	60 lbs
●	QX-254-F0340752J	240	1	31.3			B2	B3	60 lbs
●	QX-254-F0340752N	277	1	27.1			B2	B3	60 lbs
●	QX-254-F0340752I	347	1	21.6			B2	B3	60 lbs
●	QX-254-F0340752U	480	3	9.0			B2	B3	60 lbs
●	QX-254-F0340752Z	600	3	7.2			B2	B3	60 lbs
●	QX-254-F0340952D	208	3	26.4	9.5	4	B2	B3	60 lbs
●	QX-254-F0340952J	240	1	39.6			B2	B3	60 lbs
●	QX-254-F0340952N	277	1	34.3			B2	B3	60 lbs
●	QX-254-F0340952I	347	1	27.4			B2	B3	60 lbs
●	QX-254-F0340952U	480	3	11.4			B2	B3	60 lbs
●	QX-254-F0340952Z	600	3	9.1			B2	B3	60 lbs

SKU Legend: ◆ = **Popular Products** ● = **Extended Offering** ■ = **Made to Order** (Contact your local Marley Sales Representative for typically associated lead times)
Convectors are 60/50 Hz rated *Thermostat only is load carrying or remote. **Without controls.

QX SERIES
Explosion-Proof Convector

Class I, Divisions 1 & 2, Groups C & D
Class I, Zones 1 & 2 Groups IIB
Ignition Temperature Code T2A, 536° F (280°C)

Models & Specifications:

ITEM INFORMATION		ELECTRICAL DATA				UNIT SIZE	OPTIONAL BUILT-ON CONTROLS		SHIP WT.**
	CATALOG NO.	VOLTS	PHASE	TOTAL AMPS	KW		CONTROLS ONLY	THERMOSTAT ONLY* OR THERMOSTAT WITH CONTROLS	
●	QX-254-F0310053B	120	1	4.2	0.5	1	—	1007002	13 lbs
●	QX-254-F0310053C	208	1	2.4			—	1007002	13 lbs
●	QX-254-F0310053J	240	1	2.1			—	1007002	13 lbs
●	QX-254-F0310053N	277	1	1.8			—	1007002	13 lbs
●	QX-254-F0310103B	120	1	8.3	1.0	1	—	1007002	13 lbs
●	QX-254-F0310103C	208	1	4.8			—	1007002	13 lbs
●	QX-254-F0310103J	240	1	4.2			—	1007002	13 lbs
●	QX-254-F0310103N	277	1	3.6			—	1007002	13 lbs
●	QX-254-F0320183B	120	1	15.0	1.8	2	Not Required	S1	27 lbs
●	QX-254-F0320183C	208	1	8.7			Not Required	S1	27 lbs
●	QX-254-F0320183J	240	1	7.5			Not Required	S1	27 lbs
●	QX-254-F0320183N	277	1	6.5			Not Required	S1	27 lbs
●	QX-254-F0320183I	347	1	5.2			B2	B2S1	27 lbs
●	QX-254-F0320183U	480	3	2.2			B2	B2S1	27 lbs
●	QX-254-F0320183Z	600	3	1.8			B2	B2S1	27 lbs
●	QX-254-F0320253C	208	1	12.0	2.5	2	Not Required	S1	27 lbs
●	QX-254-F0320253D	208	3	6.9			B2	B2S1	27 lbs
●	QX-254-F0320253J	240	1	10.4			Not Required	S1	27 lbs
●	QX-254-F0320253N	277	1	9.0			Not Required	S1	27 lbs
●	QX-254-F0320253I	347	1	7.2			B2	B2S1	27 lbs
●	QX-254-F0320253U	480	3	3.0			B2	B2S1	27 lbs
●	QX-254-F0320253Z	600	3	2.4			B2	B2S1	27 lbs
●	QX-254-F0330363C	208	1	17.3	3.6	3	Not Required	S1	36 lbs
●	QX-254-F0330363D	208	3	10.0			B2	B2S1	36 lbs
●	QX-254-F0330363J	240	1	15.0			Not Required	S1	36 lbs
●	QX-254-F0330363N	277	1	13.0			Not Required	S1	36 lbs
●	QX-254-F0330363I	347	1	10.4			B3	B3S1	36 lbs
●	QX-254-F0330363U	480	3	4.3			B2	B2S1	36 lbs
●	QX-254-F0330363Z	600	3	3.5			B2	B2S1	36 lbs
●	QX-254-F0330443D	208	3	12.2	4.4	3	B2	B2S1	36 lbs
●	QX-254-F0330443J	240	1	18.3			Not Required	S1	36 lbs
●	QX-254-F0330443N	277	1	15.9			Not Required	S1	36 lbs
●	QX-254-F0330443I	347	1	12.7			B2	B3S1	36 lbs
●	QX-254-F0330443U	480	3	5.3			B2	B2S1	36 lbs
●	QX-254-F0330443Z	600	3	4.3			B2	B2S1	36 lbs
●	QX-254-F0340653D	208	3	18.0	6.5	4	B2	B2S1	60 lbs
●	QX-254-F0340653J	240	1	27.1			B2	B2S1	60 lbs
●	QX-254-F0340653N	277	1	23.5			B2	B2S1	60 lbs
●	QX-254-F0340653I	347	1	18.7			B2	B2S1	60 lbs
●	QX-254-F0340653U	480	3	7.8			B2	B2S1	60 lbs
●	QX-254-F0340653Z	600	3	6.3			B2	B2S1	60 lbs
●	QX-254-F0340753D	208	3	20.8	7.5	4	B2	B2S1	60 lbs
●	QX-254-F0340753J	240	1	31.3			B2	B2S1	60 lbs
●	QX-254-F0340753N	277	1	27.1			B2	B2S1	60 lbs
●	QX-254-F0340753I	347	1	21.6			B2	B2S1	60 lbs
●	QX-254-F0340753U	480	3	9.0			B2	B2S1	60 lbs
●	QX-254-F0340753Z	600	3	7.2			B2	B2S1	60 lbs
●	QX-254-F0340953D	208	3	26.4	9.5	4	B2	B2S1	60 lbs
●	QX-254-F0340953J	240	1	39.6			B2	B2S1	60 lbs
●	QX-254-F0340953N	277	1	34.3			B2	B2S1	60 lbs
●	QX-254-F0340953I	347	1	27.4			B2	B2S1	60 lbs
●	QX-254-F0340953U	480	3	11.4			B2	B2S1	60 lbs
●	QX-254-F0340953Z	600	3	9.1			B2	B2S1	60 lbs

SKU Legend: ◆ **= Popular Products** ● **= Extended Offering** ■ **= Made to Order** (Contact your local Marley Sales Representative for typically associated lead times)
Convectors are 60/50 Hz rated *Thermostat only is load carrying or remote. **Without controls.

QX SERIES
Explosion-Proof Convector

Class I, Divisions 1 & 2, Groups B, C & D
Class I, Zones 1 & 2 Groups IIB + H2
Ignition Temperature Code T3A, 356° F (180°C)

Models & Specifications:

	ITEM INFORMATION	ELECTRICAL DATA				UNIT SIZE	OPTIONAL BUILT-ON CONTROLS		SHIP WT.**
	CATALOG NO.	VOLTS	PHASE	TOTAL AMPS	KW		CONTROLS ONLY	THERMOSTAT ONLY* OR THERMOSTAT WITH CONTROLS	
●	QX-254-F0610052B	120	1	4.2	0.5	1	—	1024754	13 lbs
●	QX-254-F0610052C	208	1	2.4			—	1024754	13 lbs
●	QX-254-F0610052J	240	1	2.1			—	1024754	13 lbs
●	QX-254-F0610052N	277	1	1.8			—	1024754	13 lbs
●	QX-254-F0620142B	120	1	11.7	1.4	2	Not Required	S2	27 lbs
●	QX-254-F0620142C	208	1	6.7			Not Required	S2	27 lbs
●	QX-254-F0620142J	240	1	5.8			Not Required	S2	27 lbs
●	QX-254-F0620142N	277	1	5.1			Not Required	S2	27 lbs
●	QX-254-F0620142I	347	1	4.0			B2	B3	27 lbs
●	QX-254-F0630232B	120	1	19.2	2.3	3	Not Required	S2	36 lbs
●	QX-254-F0630232C	208	1	11.1			Not Required	S2	36 lbs
●	QX-254-F0630232D	208	3	6.4			B2	B3	36 lbs
●	QX-254-F0630232J	240	1	9.6			Not Required	S2	36 lbs
●	QX-254-F0630232N	277	1	8.3			Not Required	S2	36 lbs
●	QX-254-F0630232I	347	1	6.6			B2	B3	36 lbs
●	QX-254-F0630232U	480	3	2.8			B2	B3	36 lbs
●	QX-254-F0630232Z	600	3	2.2			B2	B3	36 lbs
●	QX-254-F0640322C	208	1	15.4	3.2	4	Not Required	S2	60 lbs
●	QX-254-F0640322D	208	3	8.9			B2	B3	60 lbs
●	QX-254-F0640322J	240	1	13.3			Not Required	S2	60 lbs
●	QX-254-F0640322N	277	1	11.6			Not Required	S2	60 lbs
●	QX-254-F0640322I	347	1	9.2			B2	B3	60 lbs
●	QX-254-F0640322U	480	3	3.8			B2	B3	60 lbs
●	QX-254-F0640322Z	600	3	3.1			B2	B3	60 lbs
●	QX-254-F0640502D	208	3	13.9	5.0	4	B2	B3	60 lbs
●	QX-254-F0640502J	240	1	20.8			Not Required	S2	60 lbs
●	QX-254-F0640502N	277	1	18.1			Not Required	S2	60 lbs
●	QX-254-F0640502I	347	1	14.4			B2	B3	60 lbs
●	QX-254-F0640502U	480	3	6.0			B2	B3	60 lbs
●	QX-254-F0640502Z	600	3	4.8			B2	B3	60 lbs

SKU Legend: ◆ **= Popular Products** ● **= Extended Offering** ■ **= Made to Order** (Contact your local Marley Sales Representative for typically associated lead times)
Convectors are 60/50 Hz rated *Thermostat only is load carrying or remote. **Without controls.

QX SERIES
Explosion-Proof Convector

Class I, Divisions 1 & 2, Groups C & D
Class I, Zones 1 & 2 Groups IIB
Ignition Temperature Code T3A, 356° F (180°C)

Models & Specifications:

	ITEM INFORMATION	ELECTRICAL DATA				UNIT SIZE	OPTIONAL BUILT-ON CONTROLS		SHIP WT.**
	CATALOG NO.	VOLTS	PHASE	TOTAL AMPS	KW		CONTROLS ONLY	THERMOSTAT ONLY* OR THERMOSTAT WITH CONTROLS	
●	QX-254-F0610053B	120	1	4.2	0.5	1	—	1007002	13 lbs
●	QX-254-F0610053C	208	1	2.4			—	1007002	13 lbs
●	QX-254-F0610053J	240	1	2.1			—	1007002	13 lbs
●	QX-254-F0610053N	277	1	1.8			—	1007002	13 lbs
●	QX-254-F0620143B	120	1	11.7	1.4	2	Not Required	S1	27 lbs
●	QX-254-F0620143C	208	1	6.7			Not Required	S1	27 lbs
●	QX-254-F0620143J	240	1	5.8			Not Required	S1	27 lbs
●	QX-254-F0620143N	277	1	5.1			Not Required	S1	27 lbs
●	QX-254-F0620143I	347	1	4.0			B2	B2S1	27 lbs
●	QX-254-F0630233B	120	1	19.2	2.3	3	Not Required	S1	36 lbs
●	QX-254-F0630233C	208	1	11.1			Not Required	S1	36 lbs
●	QX-254-F0630233D	208	3	6.4			B2	B2S1	36 lbs
●	QX-254-F0630233J	240	1	9.6			Not Required	S1	36 lbs
●	QX-254-F0630233N	277	1	8.3			Not Required	S1	36 lbs
●	QX-254-F0630233I	347	1	6.6			B2	B2S1	36 lbs
●	QX-254-F0630233U	480	3	2.8			B2	B2S1	36 lbs
●	QX-254-F0630233Z	600	3	2.2			B2	B2S1	36 lbs
●	QX-254-F0640323C	208	1	15.4	3.2	4	Not Required	S1	60 lbs
●	QX-254-F0640323D	208	3	8.9			B2	B2S1	60 lbs
●	QX-254-F0640323J	240	1	13.3			Not Required	S1	60 lbs
●	QX-254-F0640323N	277	1	11.6			Not Required	S1	60 lbs
●	QX-254-F0640323I	347	1	9.2			B2	B2S1	60 lbs
●	QX-254-F0640323U	480	3	3.8			B2	B2S1	60 lbs
●	QX-254-F0640323Z	600	3	3.1			B2	B2S1	60 lbs
●	QX-254-F0640503D	208	3	13.9	5.0	4	B2	B2S1	60 lbs
●	QX-254-F0640503J	240	1	20.8			Not Required	S1	60 lbs
●	QX-254-F0640503N	277	1	18.1			Not Required	S1	60 lbs
●	QX-254-F0640503I	347	1	14.4			B2	B2S1	60 lbs
●	QX-254-F0640503U	480	3	6.0			B2	B2S1	60 lbs
●	QX-254-F0640503Z	600	3	4.8			B2	B2S1	60 lbs

SKU Legend: ◆ **= Popular Products** ● **= Extended Offering** ■ **= Made to Order** (Contact your local Marley Sales Representative for typically associated lead times)
Convectors are 60/50 Hz rated *Thermostat only is load carrying or remote. **Without controls.

QX SERIES
Explosion-Proof Convector

Class I, Divisions 1 & 2, Groups B, C & D
Class II, Divisions 1 & 2, Groups E, F & G
Ignition Temperature Code T3C, 320° F (160°C)

Models & Specifications:

	ITEM INFORMATION	ELECTRICAL DATA				UNIT SIZE	OPTIONAL BUILT-ON CONTROLS		SHIP WT.**
	CATALOG NO.	VOLTS	PHASE	TOTAL AMPS	KW		CONTROLS ONLY	THERMOSTAT ONLY* OR THERMOSTAT WITH CONTROLS	
●	QX-254-F0810054B	120	1	4.2	0.5	1	—	1024754	13 lbs
●	QX-254-F0810054C	208	1	2.4			—	1024754	13 lbs
●	QX-254-F0810054J	240	1	2.1			—	1024754	13 lbs
●	QX-254-F0810054N	277	1	1.8			—	1024754	13 lbs
●	QX-254-F0820104B	120	1	8.3	1.0	2	Not Required	S2	27 lbs
●	QX-254-F0820104C	208	1	4.8			Not Required	S2	27 lbs
●	QX-254-F0820104J	240	1	4.2			Not Required	S2	27 lbs
●	QX-254-F0820104N	277	1	3.6			Not Required	S2	27 lbs
●	QX-254-F0820104I	347	1	2.9			B2	B3	27 lbs
●	QX-254-F0830174B	120	1	14.2	1.7	3	Not Required	S2	36 lbs
●	QX-254-F0830174C	208	1	8.2			Not Required	S2	36 lbs
●	QX-254-F0830174D	208	3	4.7			B2	B3	36 lbs
●	QX-254-F0830174J	240	1	7.1			Not Required	S2	36 lbs
●	QX-254-F0830174N	277	1	6.1			Not Required	S2	36 lbs
●	QX-254-F0830174I	347	1	4.9			B2	B3	36 lbs
●	QX-254-F0830174U	480	3	2			B2	B3	36 lbs
●	QX-254-F0830174Z	600	3	1.6			B2	B3	36 lbs
●	QX-254-F0840324C	208	1	15.4	3.2	4	Not Required	S2	36 lbs
●	QX-254-F0840324D	208	3	8.9			B2	B3	60 lbs
●	QX-254-F0840324J	240	1	13.3			Not Required	S2	60 lbs
●	QX-254-F0840324N	277	1	11.6			Not Required	S2	60 lbs
●	QX-254-F0840324I	347	1	9.2			B2	B3	60 lbs
●	QX-254-F0840324U	480	3	3.8			B2	B3	60 lbs
●	QX-254-F0840324Z	600	3	3.1			B2	B3	60 lbs

SKU Legend: ◆ **= Popular Products** ● **= Extended Offering** ■ **= Made to Order** (Contact your local Marley Sales Representative for typically associated lead times)
Convectors are 60/50 Hz rated *Thermostat only is load carrying or remote. **Without controls.

Dimensions and Clearances:

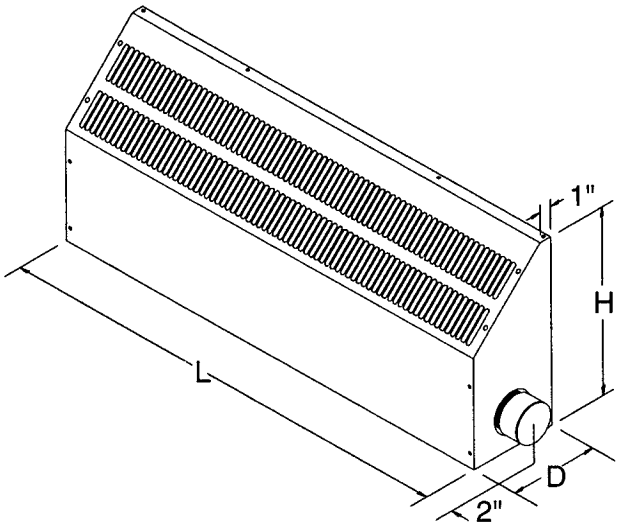

SIZE	L	H	D
1	26″	6″	4 ½
2	26″	16″	8
3	39″	16″	8
4	67 ½″	16″	8

QX SERIES
Explosion-Proof Convector

Class I, Divisions 1 & 2, Groups C & D
Class II, Divisions 1 & 2, Groups E, F & G
Ignition Temperature Code T3C, 320° F (160°C)

Models & Specifications:

	ITEM INFORMATION	ELECTRICAL DATA				UNIT SIZE	OPTIONAL BUILT-ON CONTROLS		SHIP WT.**
	CATALOG NO.	VOLTS	PHASE	TOTAL AMPS	KW		CONTROLS ONLY	THERMOSTAT ONLY* OR THERMOSTAT WITH CONTROLS	
●	QX-254-F0810054B	120	1	4.2	0.5	1	—	1007002	13 lbs
●	QX-254-F0810054C	208	1	2.4			—	1007002	13 lbs
●	QX-254-F0810054J	240	1	2.1			—	1007002	13 lbs
●	QX-254-F0810054N	277	1	1.8			—	1007002	13 lbs
●	QX-254-F0820104B	120	1	8.3	1.0	2	Not Required	S1	27 lbs
●	QX-254-F0820104C	208	1	4.8			Not Required	S1	27 lbs
●	QX-254-F0820104J	240	1	4.2			Not Required	S1	27 lbs
●	QX-254-F0820104N	277	1	3.6			Not Required	S1	27 lbs
●	QX-254-F0820104I	347	1	2.9			B2	B2S1	27 lbs
●	QX-254-F0830174B	120	1	14.2	1.7	3	Not Required	S1	36 lbs
●	QX-254-F0830174C	208	1	8.2			Not Required	S1	36 lbs
●	QX-254-F0830174D	208	3	4.7			B2	B2S1	36 lbs
●	QX-254-F0830174J	240	1	7.1			Not Required	S1	36 lbs
●	QX-254-F0830174N	277	1	6.1			Not Required	S1	36 lbs
●	QX-254-F0830174I	347	1	4.9			B2	B2S1	36 lbs
●	QX-254-F0830174U	480	3	2			B2	B2S1	36 lbs
●	QX-254-F0830174Z	600	3	1.6			B2	B2S1	36 lbs
●	QX-254-F0840324C	208	1	15.4	3.2	4	Not Required	S1	36 lbs
●	QX-254-F0840324D	208	3	8.9			B2	B2S1	60 lbs
●	QX-254-F0840324J	240	1	13.3			Not Required	S1	60 lbs
●	QX-254-F0840324N	277	1	11.6			Not Required	S1	60 lbs
●	QX-254-F0840324I	347	1	9.2			B2	B2S1	60 lbs
●	QX-254-F0840324U	480	3	3.8			B2	B2S1	60 lbs
●	QX-254-F0840324Z	600	3	3.1			B2	B2S1	60 lbs

SKU Legend: ◆ **= Popular Products** ● **= Extended Offering** ■ **= Made to Order** (Contact your local Marley Sales Representative for typically associated lead times)
Convectors are 60/50 Hz rated *Thermostat only is load carrying or remote. **Without controls.

Dimensions and Clearances:

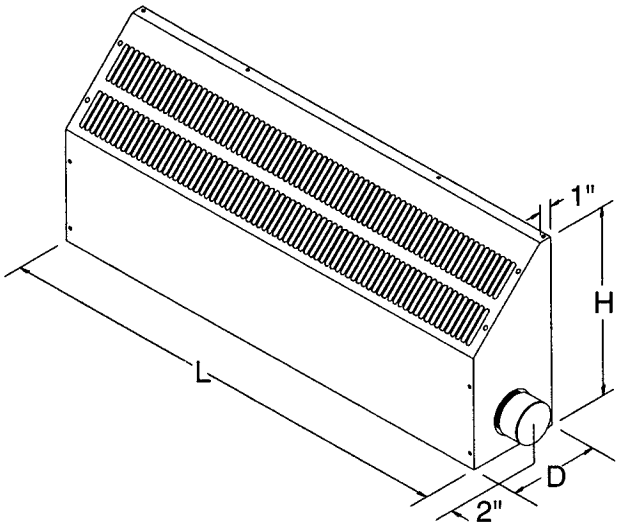

SIZE	L	H	D
1	26″	6″	4 ½
2	26″	16″	8
3	39″	16″	8
4	67 ½″	16″	8

QX SERIES
Explosion-Proof Convector

Electrical Package Options:

All single-phase heaters rated over 22 amps or 277 volts and all three-phase heaters require a magnetic contactor. Some electrical combinations will also require a control transformer. To simplify field installation, these accessories are factory-mounted on the heater cabinet and factory pre-wired (not available on Size 1 convectors).

CATALOG NO.	OPTION	DESCRIPTION
B2	Electric Control Option* (without thermostat)	Classes I and II, Groups B, C, E, D, F and G includes contactor and transformer (as required). Required for all three-phase and singlephase heaters over 22 amps or 277 volts
B2S1	Thermostat & Controls*	Classes I and II, Groups C, D, E, F and G includes thermostat, contactor and transformer (as required).
B3	Thermostat & Controls (Group B)*	Classes I and II, Groups B, C, D, E, F and G includes thermostat, contactor and transformer (as required). Thermostat has internal set point.
S1	Thermostat Only*	Classes I and II, Groups C, D, E, F and G single-phase heaters rated up to 22 amps at 120–277 volts. Use remote room thermostat Catalog Number 1007002 for Size 1 convectors.
S2	Thermostat Only (Group B)*	Classes I and II, Groups B, C, D, E, F and G single-phase heaters rated up to 22 amps at 120–277 volts. Thermostat has internal set point. Use remote room thermostat Catalog Number 1024754 for Size 1 convectors.

*Not available on Size 1 Convectors.

Accessory Remote Thermostats:

CATALOG NO.	SWITCH TYPE	TYPE	RATING	TEMP RANGE	DESCRIPTION
1007002	Bimetal	SPDT	125–277V, 22A	50°–90°F (10°–32°C)	Class 1, Div. 1, Groups C & D Class II, Div. 1, Groups E, F, & G
QX-1024754	Bulb and Capillary with Internal Set Point Adjustment	SPDT	120–240V, 25A 277V, 22A	40°–120°F (5°–49°C)	Class 1, Div. 1, Groups B, C & D Class II, Div. 1, Groups E, F, & G
QX-1025396		SPST			Corrosion-Resistant Class 1, Div. 1, Groups B, C, & D Class II, Div. 1, Groups E, F & G

Thermostat Options:

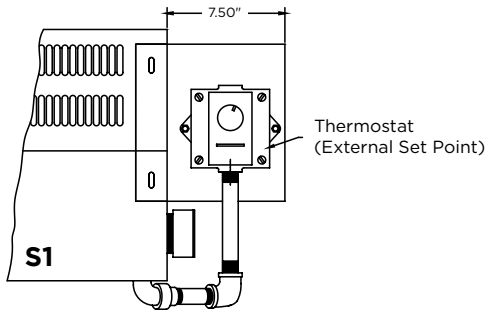

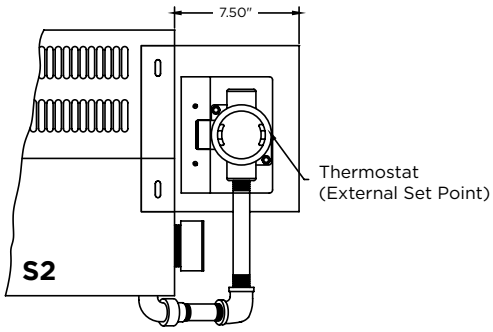

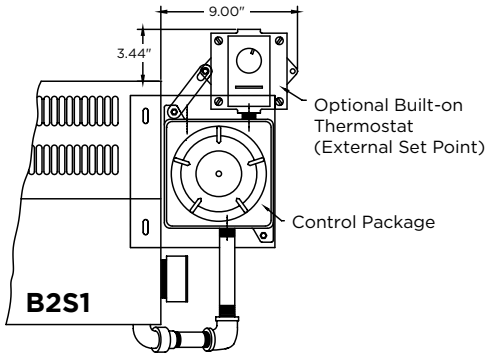

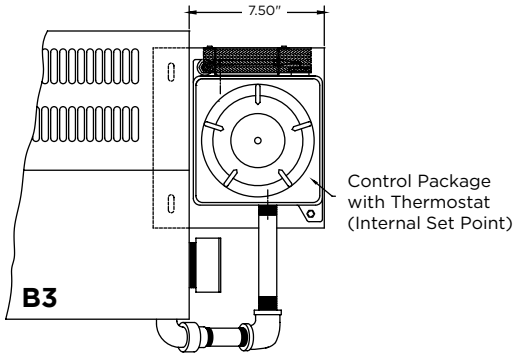

S1 & **B2S1**, rated for
Class I, Groups C & D | Class II, Groups E, F, & G

S2 & **B3**, rated for
Class I, Groups B, C & D | Class II, Groups E, F, & G

QMARK A Marley Engineered Products Brand
rev: Aug 2026

A blanket of warmth for hard-to-heat areas

RADIANT HEATERS
MARLEY CUSTOM CAPABILITIES

Radiant technology works like the sun's rays to put warmth right where you need it — without having to heat (or pay for heating) the surrounding air.



Transit Station | Stadium | Loading Dock | Open-Air Dining | Entryway | Offices & Basements

Why Radiant Heating

SAVE ON ENERGY & MAINTENANCE COSTS

By transferring warmth directly, radiant heaters don't waste energy heating the surrounding air. With no filters or moving parts to maintain, they are less costly to service as well.

HEAT WHERE AND WHEN YOU NEED IT

As a direct heat source, radiant output is unaffected by wind and rain. QMark radiant heaters can be used for everything from snow removal to cozying up counter and desk areas.

CLEANER ALTERNATIVE TO GAS HEATING

QMark radiant heaters can be installed in tight spaces with little to no clearance. There's no need for ducting or exhaust, so these heaters operate cleanly without circulating dust or fumes.

Versatile, Superior Value Both Indoors and Outdoors

Instant & Targeted Heat: Infrared energy delivers direct, uniform and localized heat — heating people and objects rather than the air, just like the sun.

Clean & Safe Heat: No fumes, odors or combustion. Does not circulate dust or other irritants and allergens.

Energy Efficient: Optimized shortwave infrared energy delivers continuous comfort efficiently without energy waste due to the wind and heating of the surrounding air.

Easy to Install: No need for gas lines, ducting or venting. Install in compact spaces.

Low Maintenance: No filters or moving parts to service.

Money Savings: Minimal upfront costs due to material and labor. Minimal energy usage and no need to purchase propane or other fuels to maintain operation.

*Customizations not available for all products.

CP SERIES
Radiant Ceiling Panel



Technical Specifications:

Dimensions: 2′x2′ 2′x4′ and Custom Sizing Available

White

Custom Colors and Silkscreens Available

Made-To-Order Models & Specifications:

ITEM INFORMATION			WATTS PER PANEL—NOMINAL PANEL LENGTH						
	PANEL WIDTH	WATT DENSITY	24–35 (IN)	36–47 (IN)	48–59 (IN)	60–71 (IN)	72–83 (IN)	84–95 (IN)	96 (IN)
■	10–13″	High	155	235	315	390^	—	—	—
■		Med	130	195	260	325^	—	—	—
■		Low	105	155	210	260^	—	—	—
■	14–17″	High	235	350	470	585^	—	—	—
■		Med	195	295	390	490^	—	—	—
■		Low	155	235	315	390^	—	—	—
■	18–21″	High	315	470	625	780	940^^	—	—
■		Med	260	390	520	650	780^^	—	—
■		Low	210	315	415	520	625^^	—	—
■	22–28″	High	375	565	750	940	1125	1315	1500
■		Med	310	470	625	785	940	1095	1250
■		Low	250	375	500	625	750	875	1000

SKU Legend: ■ **= Made to Order** (Contact your local Marley Sales Representative for typically associated lead times)

HOW TO ORDER

The catalog number for custom panels begins with the QT prefix followed:

- Watt Density (H, M, L)
- Panel Width
- Panel Length
- Voltage (1=120V; 8=208V; 2=240V; 7=277V; 3=347V)

For example, a 13 x 36 in. 240V unit with a high watt density would be QTH13362.

When ordering, please specify panel size as exact or nominal (panels can be up to 7⁄16 in. less in size).
^ maximum panel length = 60 in.
^^ maximum panel length = 72 in.

Catalog No. for surface mounting frames (QSF) and recess mounting frames (QRF) begin with their respective prefix followed by width and length of panel.

Optional Mounting Accessories:

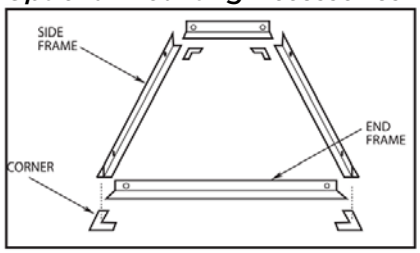

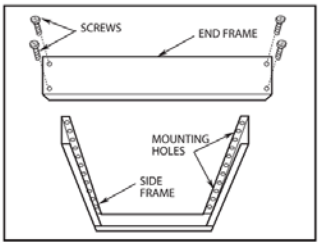

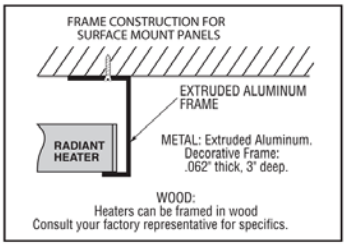

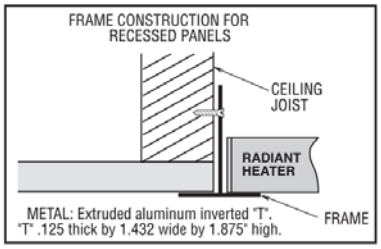

NOTE: Heating panels do not have a fire or hazardous rating, but construction is of fire retardant materials. Panels normally are treated like light fixtures. If necessary, acoustical tile can be placed on top of the panels.

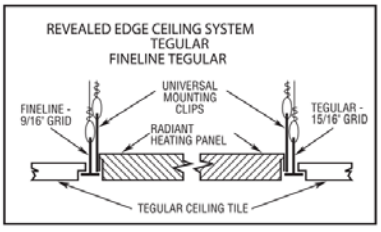

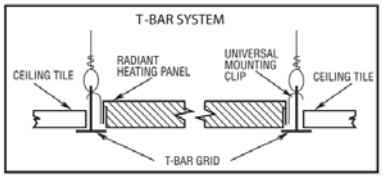

Scan the QR code to access additional specs and features.

rev: Aug 2026

CP SERIES
Radiant Ceiling Panel

Additional Made-to-Order Features

Tegular (revealed edge)
Tegular systems may utilize a standard grid with a 15/16 in. cross-T or a "fine line" grid with a 9/16 in. cross-T. The acoustical title is notched to hang below the grid creating the revealed edge. Tegular panels are built with a support angle on all four sides to allow the panel front to drop flush with the finished ceiling. Tegular and Fine line Tegular panels are supplied standard with universal mounting clips installed for support chain.

Silkscreen
Radiant heating panels can be silk screened to provide an architectural blend with leading acoustical tiles. For T-bar, concealed spline and Tegular ceiling systems.

Custom Colors
Radiant heating panels can be painted any color desired with high temperature acrylic paints without affecting panel performance. Radiant energy is emitted from heating panels in the 8–10 micron wavelength range. One of the principal characteristics of the wavelength is that it is not color selective as are shorter wavelengths. Consequently, the surface color of the panel is unimportant to heating efficiency and can be considered solely in the light of aesthetics.

Panel Fronts for Continuous Ceiling Line
To provide a continuous ceiling line around the perimeter of a building, the factory can provide panel fronts to be interspersed between the functioning heating panels.

Controls
Power Relay—factory prewired to heaters. 30 amps single-pole with 24V, 120V, 208/240V or 277V holding coil voltages.

Longer Flexible Conduit
Panels will replace the standard 48 in. greenfield with up to 11 ft. of ½ in. flexible conduit.

Stainless Steel Construction
Special stainless steel panels are available for chlorine storage areas. Panels will be equipped with seal tight connectors and silicone sealed. If orders call for stainless steel construction the panels will be painted unless specified different. Three different finishes available; mill, mirror and brushed.

Factory Silicone-Sealed Panels
Exterior moisture and condensation do not affect heating panel performance, but water inside the unit can cause the panel to fail. Panels being used in locker rooms and swimming pool areas should be totally sealed with silicone at the factory before shipment, if there is a chance of moisture above the ceiling, then seal tight conduit and seal tight connectors also should be used.

Seal-Tight Flexible Conduit & Connectors
Radiant ceiling panels come with ½ in. greenfield flexible conduit and straight connectors. Seal-tight connectors and conduit can be substituted at the factor if panels are to be used in high moisture areas or if required by local electrical codes.

Heavier Duty Panels
For special installation the factory can use heavier gauge steel in the construction of the panels.

Modular Wiring Systems
For specific jobs, the factor can substitute modular connector for the straight connectors and pig tails that are standard equipment.

Optional Made-To-Order Accessories:

CUSTOM PANEL OPTIONS	DESCRIPTION
Silkscreen	To Provide An Architectural Blend With Leading Ceiling Tile, 2x5 ft. Max. There is a Panel Charge Each Time. If Manufacturer Does Not Have A Tile Pattern Screen There Is An Additional One-Time Charge. See Pricebook.
Custom Paint	Solid Color Custom Painted Panel — To Provide An Accent Strip
Tegular or Fineline Tegular	Tegular — Reveal Edge Detail — (For 15/16 in. Grid) Construction Fineline Tegular — Reveal Edge Detail — (For 9/16 in. Grid)
Extra-length Greenfield Flex (½" x 48" Standard)	Custom Flexlength ½ x 60 in. / 72 / 84 / 96 / 108 / 120 in.
Sealtite Conduit	Custom Flexlength ½ x 60 in. / 72 / 84 / 96 / 108 / 120 in.
Silicone Seal	Seams Sealed For Added Moisture Protection. For Use In Shower Rooms And Above Pool Windows
Stainless Steel Construction	Stainless Steel — 22-Gauge Front Panel, 24-Gauge Back Panel. Includes ½ x 48 in. Sealtite Flex And Silicone Seal
Heavy Duty Construction	16-Gauge Galvanized Or Aluminized Steel Front Panel
	18-Gauge Galvanized Or Aluminized Steel Back Panel
Filler Panels	Finished To Match Standard, Silkscreen Or Custom Painted Panel. Does Not Contain An Element Or Flex Conduit. Standard Construction: Front Only. Tegular / Fineline Tegular: Front And Back Only
Power Relay	24, 120, 208, 240, 277 VAC

NOTE: Custom products are made to order and non-returnable.

INFRARED HEATERS
Introduction

Infrared technology permits the heating of areas where it is impractical, either economically or physically, to heat air. The physics that causes warm air to rise and cool air to fall are constantly working against forced air heating systems, particularly in outdoor or high ceiling areas. The radiant heat energy emitted by infrared heaters is transferred direct to the people and objects under them. It is the same principle that allows the sun to make a clear, cold day feel warm. The radiant energy from infrared heaters can be directed and focused in any direction to evenly blanket people and equipment with comforting warmth, free from drafts and noisy fans or blowers.

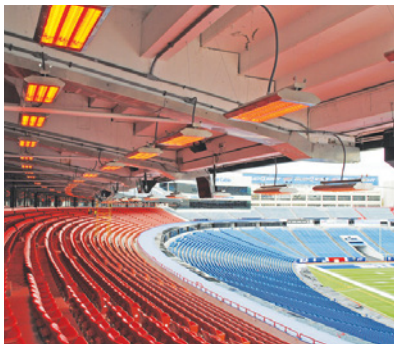







Selecting the Right Models

Keep in mind these elements when selecting the correct infrared heater for your needs. **Consult your MEP sales representative for additional design assistance**.

1. **Type of application**: area heating, snow melting, or spot heating
2. **Type of environment**: outdoors, indoors, marine or corrosive atmospheres
3. **Design area**: square footage, objects/people standing or sitting
4. **Watt density required to maintain comfort**
5. **Mounting height**
6. **Selecting Proper Heat Pattern**

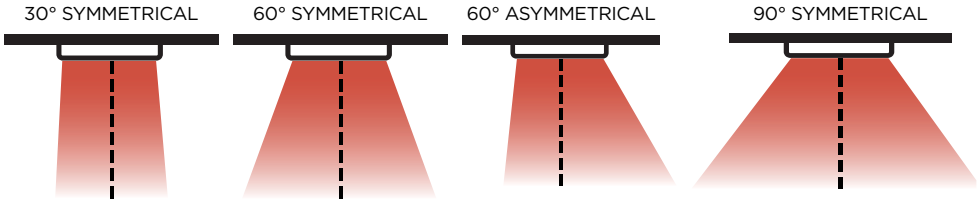

7. **Selecting Proper Heating Elements**

Metal Sheath *High Traffic Areas*	Quartz Tube *Indoor/Outdoor Area/Spot Heating*	Quartz Lamp *High Bays, Snow Melting*	Flat Panel Emitter *Indoor/Outdoor Area/Invisible Heating*
Impact ✓✓✓	Impact ✓	Impact ✓	Impact ✓✓
Vibration ✓✓✓	Vibration ✓	Vibration ✓	Vibration ✓✓✓
Splashing ✓✓✓	Splashing ✓✓✓	Splashing ✓✓	Splashing ✓
Wind ✓	Wind ✓✓	Wind ✓✓✓	Wind ✓✓

RESPONSE TIME, DESIGN TO SPEC, INTENSITY/OUTPUT, EFFICIENCY

8. **Product Selection** After determining the requirements above, visit the product portion of our catalog to select appropriately sized heaters for your application. Contact your sales representative for more information on which infrared heaters will work for your specific application.
9. **Control Optimization** For the optimal preforming solution, it is important to understand how the application space should be controlled. Marley offers a variety of control solutions for various types of application needs. Please consult your sales representative for more information on which control options are ideal for your specific application.

FRP/FRS SERIES
Commercial/Industrial Infrared Heater





Product shown installed with optional trim kit. Enclosure Box not included.

For **indoor/outdoor heating**, choose these painted steel or stainless steel infrared heaters. When added to your workshop, warehouse, gym or pool, they provide excellent spot heating or total comfort that is **unaffected by outside drafts**.

Key Features:

The Right Heat for the Right Space
Dual and triple element models concentrate your heating capacity efficiently without the need to add more individual units. Optional trim kit accessory enables the heater to be used in spaces with overhangs without consequence of wind or inclement weather adversely affecting the installation of the heater or obscuring the surrounding views.

Flexible Design
Metal sheath, quartz tube and quartz lamp heating elements can all be used interchangeably with these infrared heaters, allowing for flexible operation even when environmental conditions change.

Aim Your Heat
The heavy duty gold-anodized reflectors in this unit allow you to focus your heating pattern in any one of several configurations.

Rugged and Reliable
This infrared heater's steel internal parts and high quality finish make it a reliable, easy to maintain choice for harsh industrial environments or where coastal salt air or other corrosive conditions are present.

Steel Strength
The 20-gauge galvanized steel enclosure and wiring compartment is finished with a statuary bronze powder coat for extra durability and a refined look.

Scan the QR code to access additional specs and features.

Technical Specifications:

Element Types: Metal Sheath, Quartz Tube, Quartz Lamp
Reflection Angles: 30° Sym., 60° Sym., 60° Asym., 90° Sym.

Ideal Spaces:

Parking Garages
Arenas & Showrooms
Workshops & Gymnasiums
Loading Docks & Warehouses
Aircraft Hangers
Swimming Pools & Ski Resorts
Walkways & Entryways
Sports Arenas & Driving Ranges
Bus Stops & Smoking Areas

Intertek

Bronze

Stainless Steel

FRP/FRS SERIES
Commercial/Industrial Infrared Heater

Maximum Wattage:

	2-ELEMENT ENCLOSURE			3-ELEMENT ENCLOSURE		
	METAL SHEATH	QUARTZ TUBE	QUARTZ LAMP	METAL SHEATH	QUARTZ TUBE	QUARTZ LAMP
24″	1,700	2,000	3,200	2,500	3,000	4,800
33″	3,000	3,000	5,000	4,500	4,500	7,500
46″	4,000	4,000	7,300	6,000	6,000	10,950

*Element Wattage** *Element Voltages**

	24″	33″	46″
Metal Sheath	850	1500	2000
Quartz Tube	1000	1500	2000
Quartz Lamp	1600	2500	3650

*Specs vary by size. Refer to the submittal sheet for full details.

208	240
277	347
480	600

*Enclosure: Dimensions**

	Height	Width	Length		
2 Lamp	7 ⅛″	15″	24″	33″	46″
3 Lamp		21 ½″			

*Reflection Angle**

30° Sym.	
60° Sym.	60° Asym.
90° Sym.	

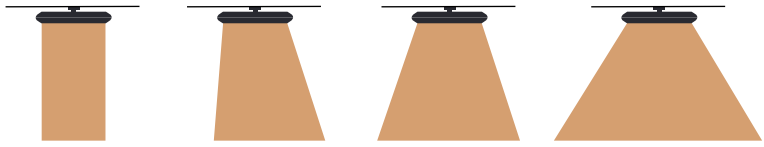

30° Symmetrical | 60° Asymmetrical | 60° Symmetrical | 90° Symmetrical

NOTE: All models are NON-STOCK, MADE-TO-ORDER. When ordering, specify quantity, catalog number, voltage, wattage, optional controls, and finish. Consult sales representative for lead times.

*Specs vary by size. Refer to the submittal sheet for full details.

Optional Accessories:

CATALOG NO.	UPC	DESCRIPTION	COMPATIBLE WITH	CARTONS	SHIP WT.
FWG22	685360084060	Wire Guard for 2-Element Heaters	FRS2/FRP2 (24 in. L)	1	1 lbs
FWG23	685360084077	Wire Guard for 2-Element Heaters	FRS2/FRP2 (33 in. L)	1	1.5 lbs
FWG24	685360084084	Wire Guard for 2-Element Heaters	FRS2/FRP2 (46 in. L)	1	2 lbs
FWG32	685360084091	Wire Guard for 3-Element Heaters	FRS3/FRP3 (24 in. L)	1	1.5 lbs
FWG33	685360084107	Wire Guard for 3-Element Heaters	FRS3/FRP3 (33 in. L)	1	2 lbs
FWG34	685360084114	Wire Guard for 3-Element Heaters	FRS3/FRP3 (46 in. L)	1	2.5 lbs
FRPATMB	685360084022	Adjustable Tilt Mounting Bracket — FRP Series		1 Set	1 lbs
FRSATMB	685360084046	Adjustable Tilt Mounting Bracket — FRS Series		1 Set	1 lbs
FRPWMB	685360084039	Wall Mounting Bracket — FRP Series		1 Set	6 lbs
FRSWMB	685360084053	Wall Mounting Bracket — FRS Series		1 Set	6 lbs
RVS2	685360137650	24 in. Red Vycor sleeve	FR(*)22/FR(*)32	1	—
RVS3	685360137667	33 in. Red Vycor sleeve	FR(*)23/FR(*)33	1	—
RVS4	685360137674	46 in. Red Vycor sleeve	FR(*)24/FR(*)34	1	—
NEW OFFERING!					
IRK-RT(**)2(***)	—	Recessed Trim Kit	FRS2/FRP2	—	—
IRK-RT(**)3(***)	—	Recessed Trim Kit	FRS3/FRP3	—	—
IRR-INST-BRK-KT	—	Installation Trim Ring Bracket	Compatible with all trim kits	—	—

(1) One element per carton order. IRR-INST-BRK-KT included for Recessed Mounted Units. * Denotes remaining catalog number (See Enclosure Chart).

Reference Submittal for color options. ***Replace with number of lamps: **2 = 2-lamp, **3** = 3-lamp; then length code: **2** = 24″, **3** = 33″, **4** = 46″

Metal Sheath: used indoors or outdoors in high-traffic areas; Quartz Tube and Quartz Lamp: used indoors and outdoors for snow melting and spot heating. Bronze finish is not intended for direct salt spray exposure in marine applications or highly corrosive greenhouse, swimming pool, chemical storage or industrial atmospheres. Maintain at least 5 ft. in radiant path, between bottom of heater and combustible material. Pigtail element leads for a more positive connection in high-traffic areas where physical abuse.

Clearances:

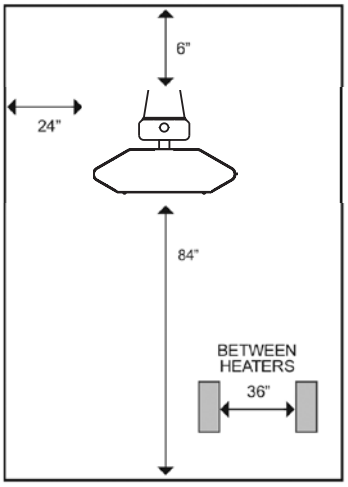

MOUNTING CLEARANCES

- 24 in. to vertical side walls
- 36 in. between heaters mounted side by side. Heaters may be mounted end to end.
- 6 in. to ceiling
- 84 in. to floor

QMARK A Marley Engineered Products Brand

rev: Aug 2026

FRP/FRS SERIES
Commercial/Industrial Infrared Heater

Dimensions: 2-Element

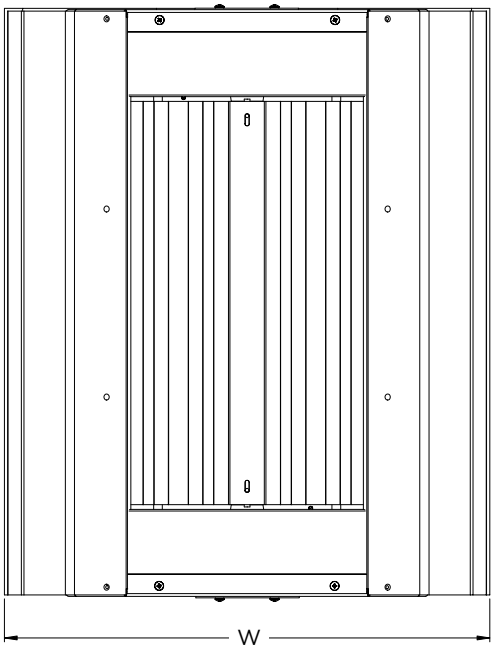

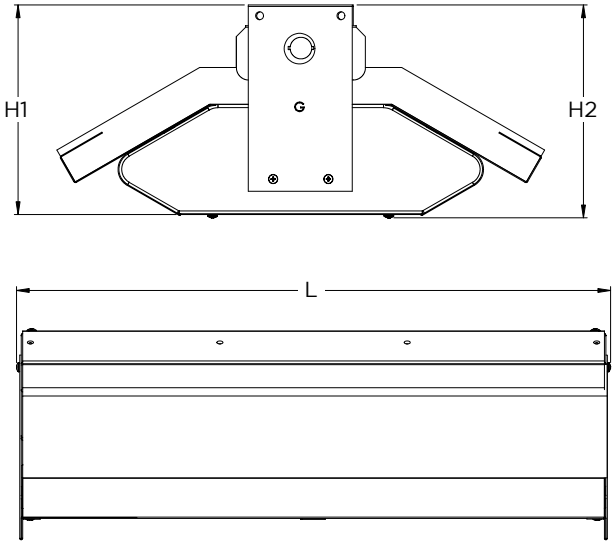

	2-ELEMENT LENGTH		
	24″	33″	46″
L	24 3/8	33 3/8	46 3/8
W	19 7/8	19 7/8	19 7/8
H1	8 21/32	8 21/32	8 21/32
H2	8 17/32	8 17/32	8 17/32

Dimensions: 3-Element

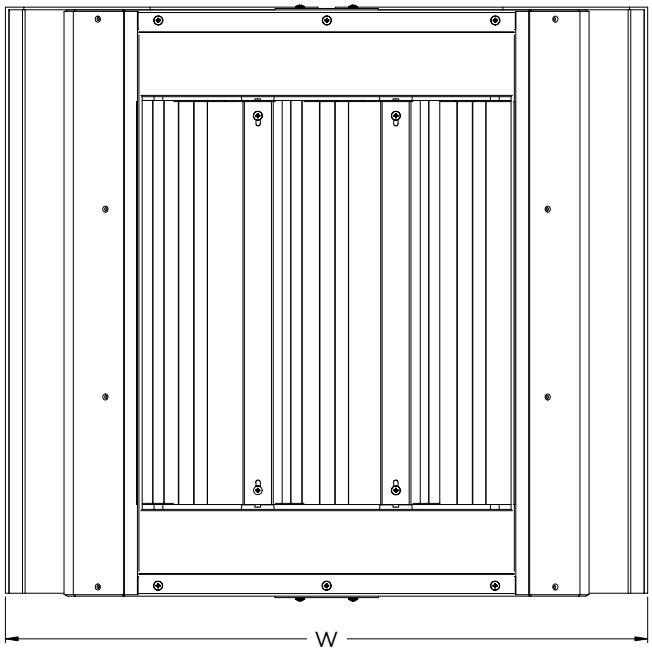

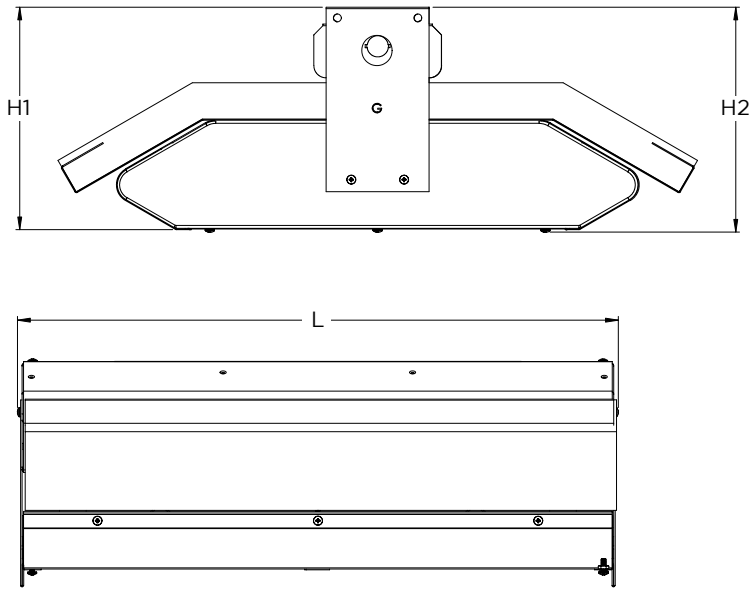

	3-ELEMENT LENGTH		
	24″	33″	46″
L	24 3/8	33 3/8	46 3/8
W	26 5/16	26 5/16	26 5/16
H1	9 1/4	9 1/4	9 1/4
H2	9 5/32	9 5/32	9 5/32

For more information visit MarleyMEP.com/Products/Radiant-Heaters

rev: Aug 2026

THZ CONTROL PANELS

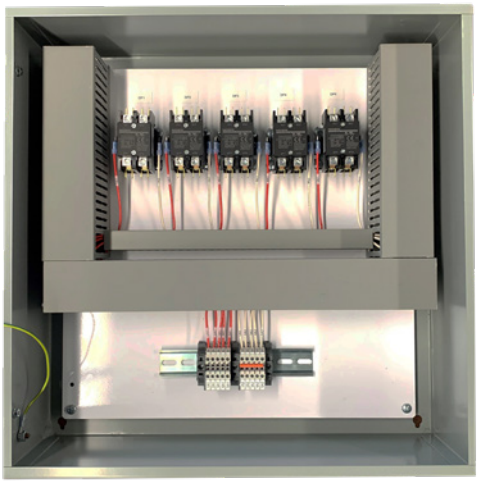

Contactor Panel



SSR Panel

Key Features:

Wide Range of Configurations

Factory-wired for efficient installations to include terminal blocks, multi-position selector switches, 24V or 120V low voltage control circuit, and other project specific accessories. Three phase panels available with 30A or 60A contactors in 2, 5, 10 or 20 unit designs; supply voltage from 208–600V. Single phase panels available with 30A contactors in 2, 5, 10 or 20 unit designs; supply voltage from 120–600V.

Enclosure Options

Nema Type 1 and Type 3R enclosure available, cULus listed and labeled control panels.

Suitable for Low and Medium Cycle Controllers

Designed to take in a wide variety of inputs. As example: standard wall thermostats, smart thermostats, on/off, timers, rheostats, percentage timers, and custom touch screen operation.

Zone Control

Single and multi-zone control capability.

GFI Protection

GFI protection can be added to all 30A options for the 2, 5, and 10 circuits panels.

Customizations

Custom panels available to include BACnet support, BMS integration, touch screen control, safety disconnects, and anything else your project requires. Reach out to your local Marley sales representative for additional details.

Scan the QR code to access additional specs and features.

Models & Specifications—Contactor Panel:

		ITEM INFORMATION		ELECTRICAL DATA		ENCLOSURE SIZE (H x W x D)			
		CATALOG NO.	DESCRIPTION	SUPPLY VOLTAGE	PHASE	TYPE 1	TYPE 1 "-GFI"	TYPE 3R "-3R"	TYPE 3R "-3R-GFI"
■	1-Circuit Panel	BR-THZ-S30-1C-0	1 DP Contactor, 30amps each, 24vac control	120–600	1	20" x 16" x 6"	24" x 16" x 6"	20" x 16" x 6"	24" x 20" x 6"
■		BR-THZ-S30-1C-1	1 DP Contactor, 30amps each, 120vac control	120–600	1	20" x 16" x 6"	24" x 16" x 6"	20" x 16" x 6"	24" x 20" x 6"
■		BR-THZ-T30-1C-0	1 DP Contactor, 30amps each, 24vac control	208–600	3	20" x 16" x 6"	24" x 20" x 6"	20" x 16" x 6"	24" x 20" x 6"
■		BR-THZ-T30-1C-1	1 DP Contactor, 30amps each, 120vac control	208–600	3	20" x 16" x 6"	24" x 20" x 6"	20" x 16" x 6"	24" x 20" x 6"
■	2-Circuit Panel	BR-THZ-S30-2C-0	2 DP Contactors, 30amps each, 24vac control	120–600	1	20" x 16" x 6"	24" x 16" x 6"	20" x 16" x 6"	24" x 20" x 6"
■		BR-THZ-S30-2C-1	2 DP Contactors, 30amps each, 120vac control	120–600	1	20" x 16" x 6"	24" x 16" x 6"	20" x 16" x 6"	24" x 20" x 6"
■		BR-THZ-T30-2C-0	2 DP Contactors, 30amps each, 24vac control	208–600	3	20" x 16" x 6"	24" x 20" x 6"	20" x 16" x 6"	24" x 20" x 6"
■		BR-THZ-T30-2C-1	2 DP Contactors, 30amps each, 120vac control	208–600	3	20" x 16" x 6"	24" x 20" x 6"	20" x 16" x 6"	24" x 20" x 6"
■	5-Circuit Panel	BR-THZ-S30-5C-0	5 DP Contactors, 30amps each, 24vac control	120–600	1	24" x 16" x 6"	24" x 24" x 6"	24" x 20" x 6"	24" x 20" x6"
■		BR-THZ-S30-5C-1	5 DP Contactors, 30amps each, 120vac control	120–600	1	24" x 16" x 6"	24" x 24" x 6"	24" x 20" x 6"	24" x 20" x 6"
■		BR-THZ-T30-5C-0	5 DP Contactors, 30amps each, 24vac control	208–600	3	24" x 24" x 6"	30" x 24" x 6"	24" x 24" x 6"	30" x 24" x 8"
■		BR-THZ-T30-5C-1	5 DP Contactors, 30amps each, 120vac control	208–600	3	24" x 24" x 6"	30" x 24" x 6"	24" x 24" x 6"	30" x 24" x 8"
■		BR-THZ-T60-5C-0	5 DP Contactors, 60amps each, 24vac control	208–600	3	30" x 24" x 8"	—	30" x 24" x 8"	—
■		BR-THZ-T60-5C-1	5 DP Contactors, 60amps each, 120vac control	208–600	3	30" x 24" x 8"	—	30" x 24" x 8"	—
■	10-Circuit Panel	BR-THZ-S30-10C-0	10 DP Contactors, 30amps each, 24vac control	120–600	1	24" x 20" x 6"	30" x 24" x 6"	24" x 20" x 6"	36" x 24" x 8"
■		BR-THZ-S30-10C-1	10 DP Contactors, 30amps each, 120vac control	120–600	1	24" x 20" x 6"	30" x 24" x 6"	24" x 20" x 6"	26" x 24" x 8"
■		BR-THZ-T30-10C-0	10 DP Contactors, 30amps each, 24vac control	208–600	3	30" x 24" x 6"	36" x 24" x 6"	30" x 24" x 8"	36" x 30" x 8"
■		BR-THZ-T30-10C-1	10 DP Contactors, 30amps each, 120vac control	208–600	3	30" x 24" x 6"	36" x 24" x 6"	30" x 24" x 8"	36" x 30" x 8"
■		BR-THZ-T60-10C-0	10 DP Contactors, 60amps each, 24vac control	208–600	3	30" x 24" x 6"	—	30" x 24" x 8"	—
■		BR-THZ-T60-10C-1	10 DP Contactors, 60amps each, 120vac control	208–600	3	30" x 24" x 6"	—	30" x 24" x 8"	—
■	20-Circuit Panel	BR-THZ-S30-20C-0	20 DP Contactors, 30amps each, 24vac control	120–600	1	36" x 24" x 6"	—	36" x 24" x 8"	—
■		BR-THZ-S30-20C-1	20 DP Contactors, 30amps each, 120vac control	120–600	1	36" x 24" x 6"	—	36" x 24" x 8"	—
■		BR-THZ-T30-20C-0	20 DP Contactors, 30amps each, 24vac control	208–600	3	36" x 36" x 6"	—	36" x 30" x 8"	—
■		BR-THZ-T30-20C-1	20 DP Contactors, 30amps each, 120vac control	208–600	3	36" x 30" x 6"	—	36" x 30" x 8"	x
■		BR-THZ-T60-20C-0	20 DP Contactors, 60amps each, 24vac control	208–600	3	36" x 30" x 6"	—	36" x 30" x 8"	x
■		BR-THZ-T60-20C-1	20 DP Contactors, 60amps each, 120vac control	208–600	3	36" x 30" x 6"	—	36" x 30" x 8"	—

SKU Legend: ◆ **= Popular Products** ● **= Extended Offering** ■ **= Made to Order** (Contact your local Marley Sales Representative for typically associated lead times)
Add "-3R" to Catalog No. to upgrade the Contactor Panel or SSR Panel to a Type 3R enclosure.
Add "-GFI" to Catalog No. GFI protection to the control panel.

QMARK A Marley Engineered Products Brand

rev: Aug 2026

THZ CONTROL PANELS

Models & Specifications – SSR Panel:

		ITEM INFORMATION		ELECTRICAL DATA		ENCLOSURE SIZE (H x W x D)			
		CATALOG NO.	DESCRIPTION	SUPPLY VOLTAGE	PHASE	TYPE 1	TYPE 1 "-GFI"	TYPE 3R "-3R"	TYPE 3R "-3R-GFI"
■	1-Circuit Panel	QR-THZ-S30-1SR-24DC	1 SSR, 30amps each, 24vdc control	120-480	1	20" x 16" x 8"	30" x 24" x 6"	20" x 16" x 8"	24" x 20" x 6"
■		QR-THZ-T30-1SR-24DC	1 SSR, 30amps each, 24vdc control	208-480	3	20" x 16" x 8"	30" x 24" x 6"	20" x 16" x 8"	24" x 20" x 6"
■	2-Circuit Panel	QR-THZ-S30-2C-0	2 SSR's, 30amps each, 24vdc control	120–480	1	20" x 16" x 8"	30" x 24" x 6"	20" x 16" x 8"	24" x 20" x 6"
■		QR-THZ-T30-2C-1	2 SSR's, 30amps each, 24vdc control	208–480	3	20" x 16" x 8"	30" x 24" x 6"	20" x 16" x 8"	24" x 20" x 6"
■	5-Circuit Panel	QR-THZ-S30-5SR-24DC	5 SSR's, 30amps each, 24vdc control	120–480	1	20" x 20" x 8"	30" x 24" x 8"	30" x 24" x 8"	30" x 24" x 8"
■		QR-THZ-T30-5SR-24DC	5 SSR's, 30amps each, 24vdc control	208–480	3	24" x 20" x 8"	30" x 24" x 8"	30" x 24" x 8"	30" x 24" x 8"
■	10-Circuit Panel	QR-THZ-S30-10SR-24DC	10 SSR's, 30amps each, 24vdc control	120–480	1	30" x 24" x 8"	30" x 24" x 8"	30" x 24" x 8"	36" x 30" x 8"
■		QR-THZ-T30-10SR-24DC	10 SSR's, 30amps each, 24vdc control	208–480	3	30" x 24" x 8"	30" x 24" x 8"	30" x 24" x 8"	36" x 30" x 8"
■	20-Circuit Panel	QR-THZ-S30-20SR-24DC	20 SSR's, 30amps each, 24vdc control	120–480	1	36" x 24" x 8"	—	42" x 30" x 8"	—
■		QR-THZ-T30-20SR-24DC	20 SSR's, 30amps each, 24vdc control	208–480	3	36" x 30" x 8"	—	42" x 30" x 8"	—

SKU Legend: ◆ **= Popular Products** ● **= Extended Offering** ■ **= Made to Order** (Contact your local Marley Sales Representative for typically associated lead times)
Add "-3R" to Catalog No. to upgrade the Contactor Panel or SSR Panel to a Type 3R enclosure.
Add "-GFI" to Catalog No. GFI protection to the control panel.

Optional Compatible Controls:

CATALOG NO.	DESCRIPTION	SUPPLY VOLTAGE	PHASE	AMP RATING	SUITABLE WITH		
					CONTACTOR PANEL	STAND ALONE	SSR PANEL
TZ-REM-PT	Fixed Cycle Controller w/ Adjustable Output	120/24	1	NA	—	—	Yes
TZ-PCT	Adjustable Cycle Controller w/ Adjustable Output	120/240	1	28	Yes	Yes	Yes
TZ-TIMER	0–60 Min Heavy Duty In-Wall On/Off Timer	120/240	1	28	Yes	Yes	Yes
TZ-TIMER2HR	0–120 Min Heavy Duty In-Wall On/Off Timer	120/240	1	20	Yes	Yes	Yes
TZ-HUB	App Based Z-Wave Wireless Connection Hub	120	1	NA	Yes	Yes	Yes
TZ-SWITCH	App Based Z-Wave Wireless Junction Box	120/240	1	40	Yes	Yes	Yes
TZ-REMOTE	Z-Wave Compatible Wireless Switch/Wall Remote	Battery	—	NA	—	—	—

Optional controls suitable for isolated control of your heater(s), or to be paired with QMarks line of control panels to operate banks of heaters together. Options range from adjustable output cycle timers with fixed and adjustable cycle times, to standard on/off timer control, and introducing market leading Z-Wave app based control for easy operation from your phone.

Control your comfort with easy-to-use features and money-saving controls

Don't forget the thermostat! Go to page 115 to find a compatible model for your custom order.

M601W/M602W

Best Sellers | Easy Installation and Control | Great Low Cost Solution



MD26



CNTLTSTDNP1H1C

Advanced Comfort Control
Sleek and Modern Design
Accurate Low Voltage Solution



LTR2240

Direct Low Voltage Control for High Amp Loads
Allows for BMS Integration
Microprocessor Base Design







QMARK®
A Marley Engineered Products Brand

QMARK® HEATING SOLUTIONS

Quickly bring warmth to any area.



EASY INSTALLATION



CONTROL OPTIONS



AFFORDABLE PERFORMANCE



SAFE OPERATION