Marley
Engineered Products

PRH SERIES PLENUM HEATER ACCESSORIES

Installation Instructions

NOTE: The accessories described in this instruction manual are intended for use with Marley Engineered Products PRH Series Plenum Heaters.

⚠ WARNING ⚠

This instruction sheet provides information for the proper installation and use of the accessories described. It is to be used in conjunction with the instruction manual that came with the PRH series unit. Read, understand and follow the instruction and warnings provided in each manual before operating the unit. Failure to do so could result in improper and / or unsafe operation of the unit that could lead to a fire, personal injury or permanent damage to the unit.

TO REDUCE THE RISK OF FIRE OR ELECTRIC SHOCK: Always disconnect power to the unit at the main service panel before installing these accessories or performing any maintenance on the unit.

Save these instructions along with the heater instructions for future reference.

SAVE THESE INSTRUCTIONS

Specifications

Model	Description	Fits Model Size
FRST10	Disposable filter and rack	3kW - 5 kW
FRLT20	Disposable filter and rack	7.5kW - 15 kW
FRWS15	Reusable filter and rack	3kW - 5 kW
FRWL25	Reusable filter and rack	7.5kW - 15kW
LKS10	Adjustable wall/ceiling register kit	3kW - 5kW
LKL15	Adjustable wall/ceiling register kit	7.5kW - 15kW
AES10	Discharge louver kit	3kW - 5kW
AESL15	Discharge louver kit	7.5kW - 15kW

⚠ WARNING ⚠

TO REDUCE THE POTENTIAL FOR FIRE OR ELECTRIC SHOCK, READ AND FOLLOW INSTRUCTIONS AND WARNINGS PROVIDED IN THE HEATER INSTRUCTION MANUAL.

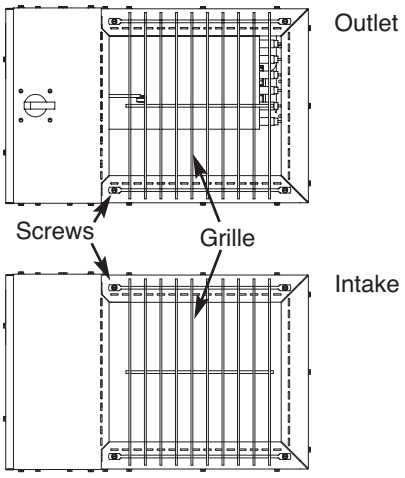

Figure 1

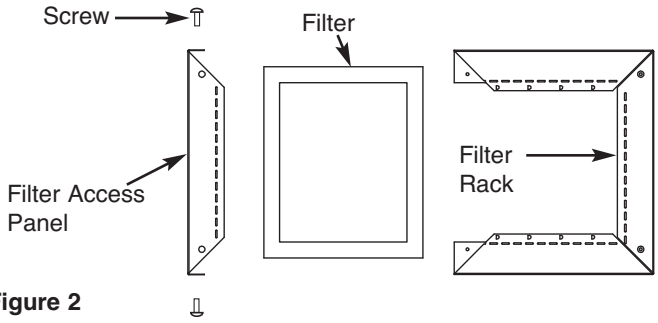

Figure 2

INSTALLATION

FRST10, FRLT20 Filter Rack and Disposable Filter
FRWS15, FRWL25 Filter Rack and Reusable Filter

NOTE: Refer to specifications for accessory compatability before beginning installation.

1. Remove the grille from the intake side by loosening and removing the four screws and set aside.
2. Remove the filter access panel from the filter rack by loosening the two screws on either side.

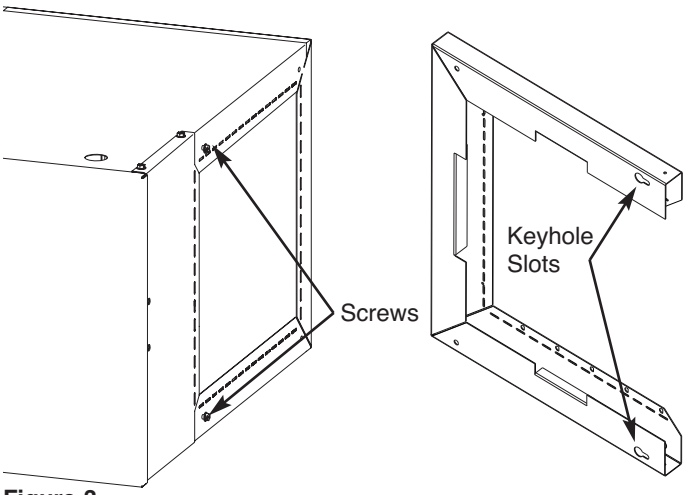

Figure 3

3. Determine orientation of the filter rack to permit sufficient clearance for access to service the filter. Note location of the keyhole slots on the back of the filter rack and insert two screws removed from grille in the heater corresponding to the keyholes in the filter rack but do not tighten (see Figure 3). Slide filter rack keyholes over the screws and tighten the two screws to hold filter rack in place. Insert the remaining two screws from grille at opposite end and tighten.
4. Insert filter into open end of filter rack and replace filter access panel and secure with the two screws removed in step 2. Make sure all hardware is secure.

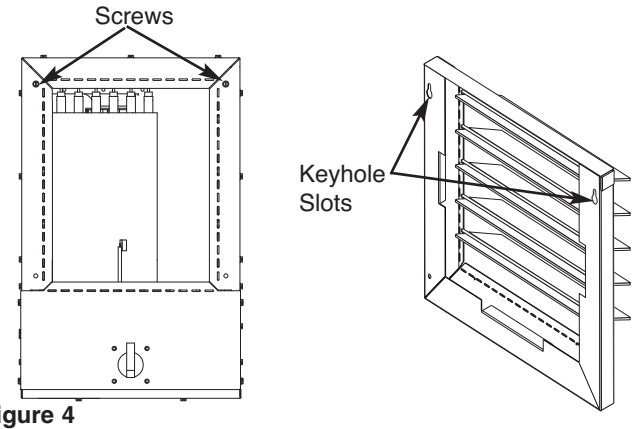

Figure 4

AES10 and AESL15 Louver Kits

NOTE: Refer to specifications for accessory compatability before beginning installation.

1. Remove the grille from the outlet side by loosening and removing the four screws. Retain the four screws, they will be used again.
2. Determine orientation of the louver rack for desired airflow. Note location of the keyhole slots on the back of the louver rack and insert two screws removed from grille in the heater corresponding to the keyholes in the louver rack but do not tighten (see figure Figure 4). Slide louver rack keyholes over the screws and tighten the two screws to hold louver rack in place. Insert the remaining two screws from grille at opposite end and tighten.
3. Adjust louvers to achieve desired airflow pattern.

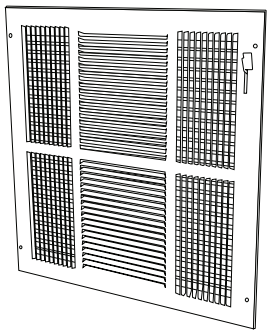

Figure 5

LKS10 and LKL15 Adjustable Wall / Ceiling Register Kits

Register kits AES10 and AESL15 are to be used for ducted applications

AES10 requires a rough in opening 13-11/16” x 13-3/4”.
AESL15 requires a rough in opening 15-3/4” x 15-3/4”.

Once an appropriate location has been determined on the wall or ceiling and ducting has been routed, cut a hole according to the rough in dimensions. Using appropriate fasteners for the material in which the register will be installed, attach the register by way of the four holes (one in each corner) to the wall or ceiling.