A Marley Engineered Products Brand
470 Beauty Spot Rd. E, Bennettsville, SC 29512

CHPR25
HORIZONTAL PLENUM HEATER

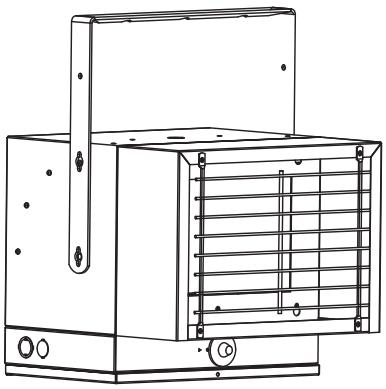

CAPACITIES
1900 to 2500 watts
208 or 240 V
1Ø only

ITEM	QTY.	CAT. NO.	TAG	HEATER			AMPS	MOTOR VOLT	AIR FLOW		NO. OF STAGES	BUILT-IN CONTROLS
				KW	VOLTS	Ø			CFM	FAHRENHEIT RISE		

ACCESSORIES AND CONTROLS

ITEM	QTY.	CAT. NO.	TAG	DESCRIPTION

SUBMITTED BY:	DATE

APPROVED BY:	DATE

CHPR25

QMARK®

A Marley Engineered Products Brand

470 Beauty Spot Rd. E, Bennettsville, SC 29512

DIMENSIONS

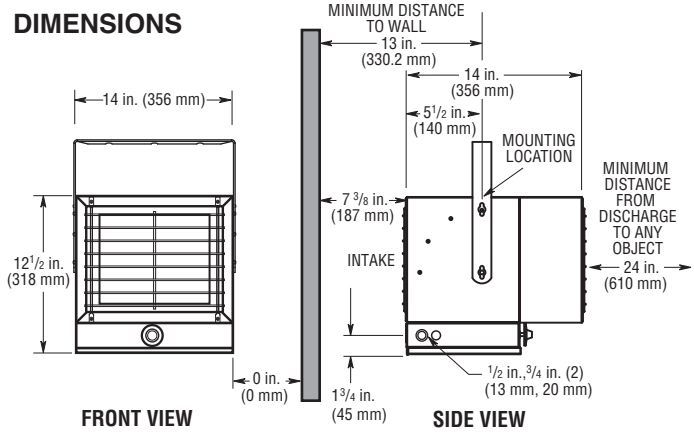

ARCHITECT'S AND ENGINEER SPECIFICATIONS*

The electric horizontal plenum rated heater shall be as manufactured by QMark, A Marley Engineered Products Brand, Bennettsville, SC. Heater shall be certified by ETL to comply with Standard for Heating and Cooling Equipment ANSI/UL 1995, CAN/CSA No.236-05, third edition, designed for mounting for horizontal discharge. Also, it must meet stringent City of Chicago codes for plenum use.

CABINET – The cabinet shall be made of 18 gauge cold rolled steel casing with neutral grey polyester powder coat finish for corrosion protection. The bottom panel shall be hinged to open without dismounting the heater. By removing a screw to lock in place this allows full access to the control panel.

HEATING ELEMENTS – The heating elements shall be warranted for five years and shall be of non-glowing design consisting of 80-20 Ni/Cr resistance wire enclosed in a steel sheath to which steel plate fins are brazed. The heating element shall be located directly in front of the blower discharge air for uniform heating to assure that all incoming air passes through the heating element.

CONTROL BOX – The Nema 12 (gasketed) control box, housing all heater wiring and controls, shall be located at the bottom of the heater and equipped with a swing down hinged cover to permit full access for installation and servicing without dismounting the heater.

SAFETY THERMAL CUTOUTS – Thermal safety cutouts shall be built into the system to automatically shut off heater in the event of overheating due to any cause. The safety cutouts shall directly interrupt power to the elements.

FAN DELAY CONTROL – Fan control shall delay fan start up of the fan motor until the heating elements have warmed up. It shall maintain motor operation after heating elements have been de-energized to dissipate residual heat.

TEMPERATURE CONTROL – The heater shall have a built-in thermostat. The temperature range shall be 40° F to 90° F with a positive OFF feature.

ZERO CLEARANCE – The heater shall be rated for zero clearance to any surface mounted next to the sides, top, and bottom of the metal cabinet.

FAN MOTOR – Fan motor shall be totally enclosed, impedance protected and of unit bearing design suitable for horizontal operation with high starting and running torques. Fan motor and controls shall operate directly from the line voltage.

SELECTION CHART

CATALOG NUMBER	VOLTS	HZ	KW	PHASE	BTUH	CFM	FPM	RISE	AMPS*	WT.
CHPR25	240	50 / 60	2.5	1	8530	150	1880	60°F	10.7	26 lbs
	208	50 / 60	1.9	1	6398	150	1880	46°F	9.42	26 lbs

(Thermostat temperature range : 40°F to 90°F)

* Includes motor amps.