Marley® Engineered Products — Open Coil Electric Duct Heater – **SUBMITTAL FORM**

CUSTOMER INFORMATION

Name: _____

Address: _____

City: _____

Contact: _____

Phone: _____

Fax: _____

E-mail: _____

P.O. #: _____

Job Name: _____

REPRESENTATIVE

Name: _____

Address: _____

City: _____

Contact: _____

Phone: _____

Fax: _____

E-mail: _____

Quote #: _____

Date: _____ ❑ Duct Heater ❑ Control Panel ❑ Accessories

Brand	Mounting	Element	Revision	Output (KW)	Supply Voltage/ Phase	Insulation Thickness (in,)	Stages	Control Voltage	Width	Height or Diameter	Heater Control	Time Delay Options	Airflow Switch	Power Fusing	Disconnect Switch	Control Trasformer Options	Thermostat Options	Coil Options	Derated Options	Pilot Light Optons	Control Box Options

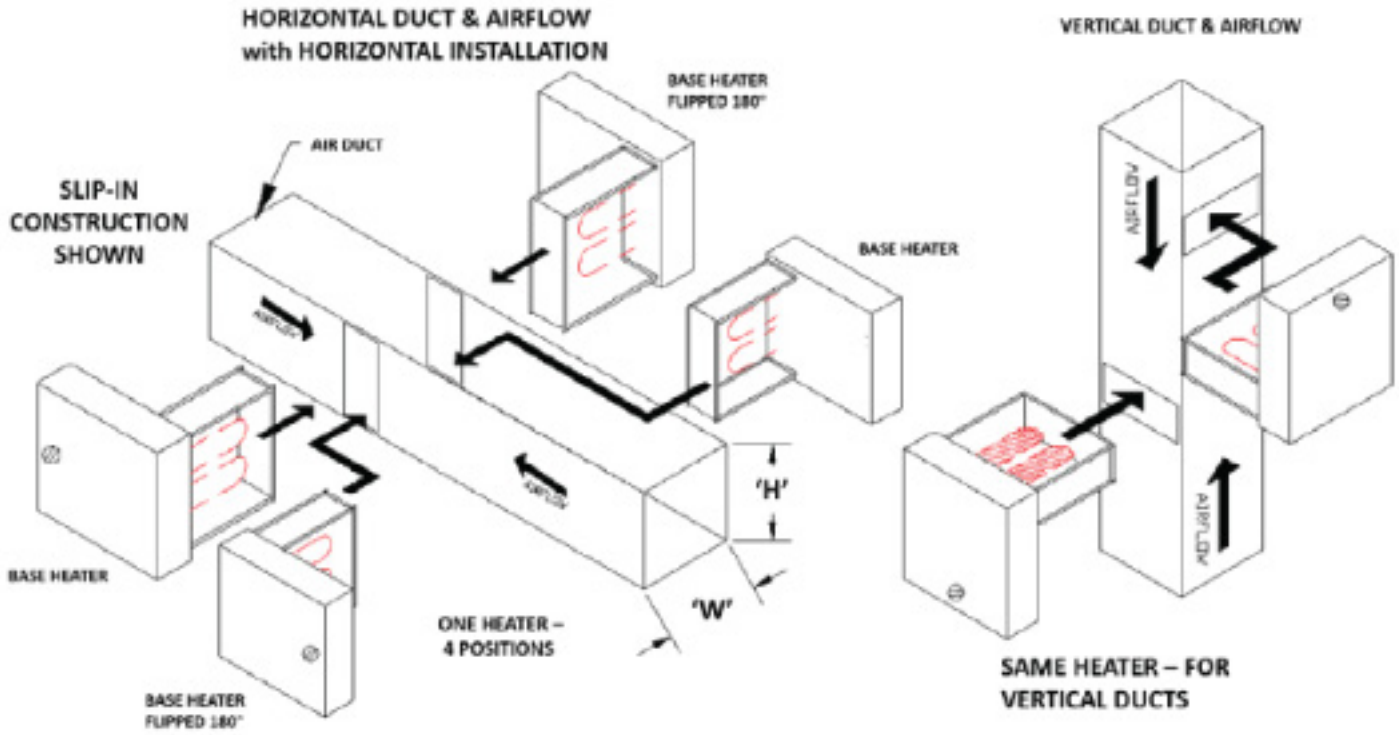
HORIZONTAL DUCT & AIRFLOW
with HORIZONTAL INSTALLATION
SLIP-IN
CONSTRUCTION
SHOWN
AIR DUCT
BASE HEATER
FLIPPED 180°
BASE HEATER
'H'
'W'
BASE HEATER
ONE HEATER –
4 POSITIONS
BASE HEATER
FLIPPED 180°
VERTICAL DUCT & AIRFLOW
AIRFLOW
AIRFLOW
SAME HEATER – FOR
VERTICAL DUCTS

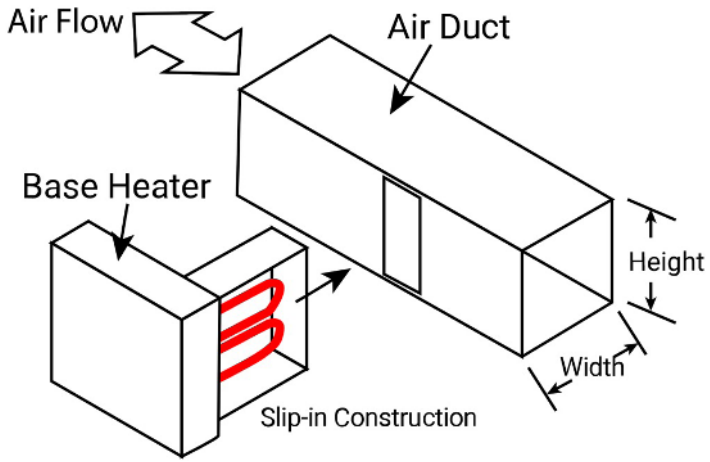
Air Flow
Air Duct
Base Heater
Height
Width
Slip-in Construction

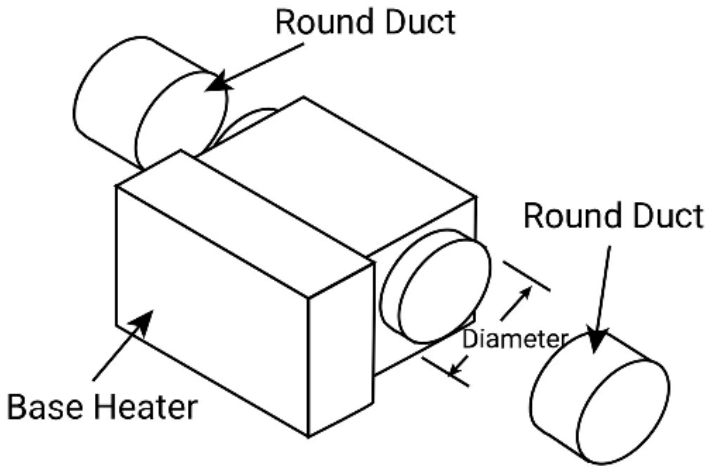
Round Duct
Round Duct
Diameter
Base Heater

Open Coil Electric Duct Heater – **SUBMITTAL FORM**

How to Order

Open Coil Duct Heater Smart Part Number										
Brand (1 plc)	Mounting (1 plc)	Element Style (1 plc)	Revision Number (1 plc)	KW (3 plcs)	Supply Voltage/Phase (1 plc)	Insulation Thickness (in.) (2 plcs)	Stages (2 plcs)	Control Voltage (1 plc)	Width (3 plcs)	Height or Diameter (3 plcs)
B (Berko)	S (Slip-In)	C (Open Coil)	A	020	1 = 120V 1 Ph	00 = 0.0"	1=1 Stage	1 = 24V	'048	'036
Q (QMark)	F (Flanged)				2 = 208V 1 Ph	05 = 0.5"	2=2 Stage	2 = 120		
	R (Round Collar)				3 = 208V 3 PH	10 = 1"	03=3 Stage	3 = 208	*For Round Duct Heaters diameters are 06 = 6 inch, 08 = 8 inch, and 010 = 10 inch	
					4 = 240V 1 PH	15 = 1.5"		4 = 240		
					5 = 240V 3 PH	20 = 2"		5 = 277		
					6 = 277V 1 PH	25 = 2.5"		6 = 480		
					7 = 480V 1 PH	30 = 3"				
					8 = 480V 3 PH					

Control Package (11 plcs)				
Heater Controls (1 plc)	Tim Delay Options (1 plc)	Airflow Switch	Power Fusing (1 plc)	Disconnect Switch (1 plc)
0 = None	0 = None	0 = None	0 = None	0 = None
A (SCR)	A (Time Delay Relay, Heater On)	A (Airflow Switch, non-adjustable)	A (Power Fusing)	A (Disconnect Switch)
B (Step Controller, Analog Signal Required)	B (Time Delay Relay,Delay Between Stages)	B (Airflow Switch, adjustable		
C (Fan Interlock)	C (Time Delay Relay, Heater On & Delay Between Stages			
D (Heater Interlock, Disable/Enable Heater)				
E = SCR and Heater interlockw				

Control Package (11 plcs)					
Control Transformer Options (1 plc)	Thermostat Options (1 plc)	Coil Options (1 plc)	Derated Options (1 plc)	Pilot Light Options (1 plc)	Control Box Options (1 plc)
0 = None	0 = None	0 = None	0 = None	0 = None	0 = None
A(Control Transformer)	A (Thermostat, Wall Mount)	A (Stainless Steel Coil Terminals for Corrosion Resistance)	A (Derate to 35 Watts)	A (Pilot Light, Heater Power On)	A (Vapor Barrier)
B (Control Transformer & Primary Fusing)	B (Thermostat, with Remote Sensor)	B (80/20 Corrosion Resistant Wire)	B (Derate to 25 Watts)	B (Pilot Light, Heater Energized)	B (Dust Tight Box)
C (Control Transformer & Secondary Fusing)	C (Thermostat, with Duct Sensor)	C (Stainless Steel Element Rack)		C (Pilot Light, Stage On, 1 per stage)	C (Outdoor Rated)
D (Control Transformer & Secondary&Primary Fusing)				D (Pilot Light, Airflow Switch Open)	D (Dust Tight Box & Vapor Barrier)

Marley® Engineered Products — Open Coil Electric Duct Heater – **SUBMITTAL FORM**

Customer Order		Brand (1 plc)	Mounting (1 p'c)	Element (1 plc)	Revision # (1 plc)	KW (3 plcs)	Supply Voltage/ Phase (1 plc)	Insulation Thickness (in.) (2 plc)	Stages (2 plcs)	Control Voltage (1 plcs)	Width (3plcs)	Height (3plcs)	Heater Controls (1 plcs)	Time Delay Options (1 plcs)	Airflow Switch (1 plcs)
Berko Product	20 inch Wide Duct	B	F	C	A	024	3	10	01	1	020	014	A	0	A
Flange Design	14 inch Height Duct														
Open Coil Heater	SCR Controlled														
24 kilowatts	Air Flow Switch														
208 Volt	Disconnect Switch														
Three Phase	Control Transformer & Primary Fusing														
1" Insulation	Thermostat, Wall Mount														
1 Stage	Derate to 35 Watts														
24V Control	Pilot Light, Heater Power On														

Customer Order		Power Fusing (1pic)	Disconnect Switch (1pic)	Control Transformer Options (1 pic)	Thermostat Options (1 pic)	Coil Options (1 pic)	Derated Options (1 pic)	Pilot Light Options (1 pic)	Control Box Options (1 pic)
Berko Product	20 inch Wide Duct	0	A	B	A	0	A	A	0
Flange Design	14 inch Height Duct								
Open Coil Heater	SCR Controlled								
24 kilowatts	Air Flow Switch								
208 Volt	Disconnect Switch								
Three Phase	Control Transformer & Primary Fusing								
1" Insulation	Thermostat, Wall Mount								
1 Stage	Derate to 35 Watts								
24V Control	Pilot Light, Heater Power On								