Installation Instructions

Open Coil Electric Duct Heater for Round Ducts

Duct Heaters for Round Ducts

The information and instructions in this sheet apply to Duct Heater models for zero clearance installation in ducts.

The Duct Heaters are approved for use with heat pumps, air conditioners, or other forced air systems. They may be controlled by contactors, relays, sequencers or solid state devices.

The Duct Heaters are pre-wired, have voltage ratings to 480 volts, both single phase and three phase.

The Duct Heaters are furnished with integral controls.

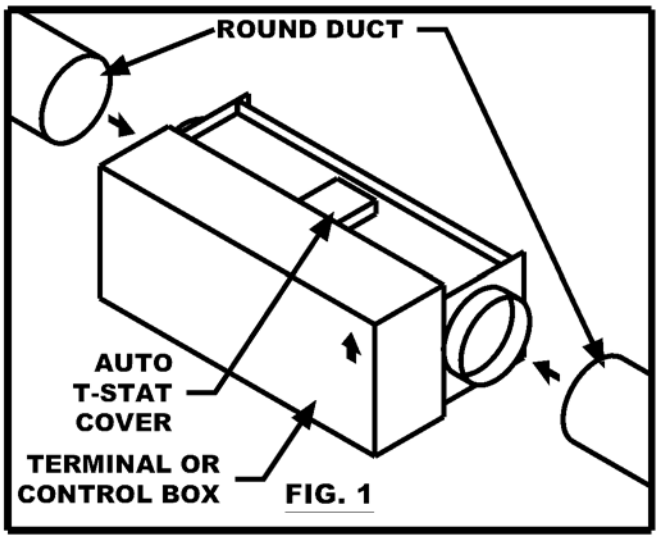

FIG. 1

General

Inspect heater for any possible shipping damage. Check all insulators for breakage and inspect heater element wire for any deformation that could cause a short circuit or ground. Make sure all fasteners are tight. Electrical connections such as pressure terminals should be checked for tightness.

Installation

For safe operation and best performance, the following installation procedures must be adhered to.

Heaters are to be installed in horizontal ducts "only."
Heaters should "never" be installed in vertical ducts.

Install a heater a minimum of (4) feet from heat pumps or central air conditioners.

1. At least 4 feet downstream from an air handler.
2. At least 2 feet either side of an elbow or turn.
3. At least 4 feet from any canvas duct connector or transition section for change in duct size.
4. At least 4 feet downstream from an air filter.
5. At least 4 feet upstream form a humidifier.

Refer to the back of this sheet for: duct, electrical and air velocity requirements.

Utilizing hanger straps Install heater between two sections of round duct, insuring that the up arrow on the control box is in the proper vertical position. Refer to fig. 1.

Installation Instructions

Open Coil Electric Duct Heater for Round Ducts

The air duct should be installed in accordance with the Standards of the National fire Protection Agency for the Installation of AirConditioning and Ventilating Systems (Pamphlet No. 90A) and WarmAir Heating and Air-Conditioning Systems (Pamphlet No. 90B).

Do not “Bank” heaters (side by side). If greater capacity is required, proportion smaller heaters in separate runouts.

Heater control boxes must be completely accessible and located to provide ventilation at all times.

Electrical Requirements

- Refer to attached wiring diagram and wiring diagram on inside of cover. Make sure line and control voltage of system matches that noted on wiring diagram.
- Wire in accordance with N.E.C. and any existing local codes.
- Check tightness of all factory and field electrical connections.
- Make sure fan interlock is wired in if the Duct Heater does not have an air flow switch.
- Use 90 C (194 F) copper wire.
- Control must be wired for N.E.C. Class 1 unless otherwise specified.
- When heater has integral transformer for control voltage to thermostat, use thermostat with isolating contacts to prevent interconnection of Class 2 outputs.
- Disconnect§!! electrical power before servicing. When servicing heater, make sure all components are repositioned in the proper location and reconnected per the wiring diagram.
- Replacement parts must be identical to the original components. Contact factory for replacement parts.

Minimum Air Velocities

60 CFM per KW for inlet air temperatures below 78 F. (25.55 C.).

85 CFM per KW for inlet air temperatures 78 F. to 100 F. (25.55 C. to 37.78 C.)

The minimum uniform airflow in a duct heater is directly related to the inlet air temperature. Consideration must be given to both airflow across the heater and inlet air temperature.

Note: Minimum airflow must be maintained at any point over the face of the heater

Note: Observe at least one complete heating cycle to insure that cycling of the safety limit controls does not occur before leaving the installation.