MUH-PRO SERIES
Bundled Unit Heater

MUH-PRO SERIES
Pro Bundle



MUH-PRO+ SERIES
Pro+ Bundle



Technical Specifications:

Temp Range: 40°–90°F
CFM: 350–650

Ideal Spaces:

Factories
Warehouses
Garages
Stairwells
Shipping Docks
Power Stations
Mechanical Rooms

Beige Bronze

5 YEAR WARRANTY ELEMENT

1 YEAR WARRANTY WORKMANSHIP

The MUH-PRO series delivered standard with:

- A disconnect switch for safe and easy maintenance or repair
- A 24VAC transformer for easy integration with a low voltage thermostat today or in the the future
- A built in single stage thermostat for easy operation and control out of the box

Pro+ Models come standard with:

- The SmartSeries® Plus thermostat and B10 bracket for a superior out of the box installation experience
- The SmartSeries Plus control offers optimal control and easy integration whether via a BACnet MT/TP BMS or it's standalone digital, 7-day programmable touchscreen with cooling and vacation modes standard with no extra components

Bundled Benefits:

- **Safety**: The disconnect switch gives peace of mind to the maintenance worker because the disconnect switch will cutoff incoming power to the unit so it can be easily repaired. The low voltage transformer no longer requires you to work with line voltage control for easy and safer control.
- **Increase Availability**: The Pro Series heater is a stock unit and therefore there is no longer a wait for the same configured features of yesterday!
- **Better Pricing**: Enjoy the benefits of the three added accessories without the full cost of a similar configured style unit.
- **Simple Setup + Integration**: All of the accessories come factory installed and therefore the unit is ready to wired and mounted once it reaches your door.
- **Easily Stocked:** This Pro Series bundle reduces the number of skus to stock and therefore is easily stocked and readily available on the shelves of distributors nationwide.

MUH-PRO SERIES
Bundled Unit Heater

Models & Specifications:

ITEM INFORMATION			ELECTRICAL DATA					AIR DELIVERY DATA FAN MOTOR DATA	
	CATALOG NO.	UPC	VOLTS	PHASE	KW	AMPS	CONTROL VOLT	CFM	SHIP WT.*
◆	MUH0381-PRO	685360173818	208	1	3	14.5	24	350	27 lbs
◆	MUH0381-PRO-SSP	685360174631	208	1	3	14.5	24	350	27 lbs
◆	MUH0581-PRO	685360173825	208	1-3	5	24	24	350	27 lbs
◆	MUH0581-PRO-SSP	685360174600	208	1-3	5	24	24	350	27 lbs
◆	MUH078-PRO	685360173832	208	1-3	7.5	36	24	650	38 lbs
◆	MUH078-PRO-SSP	685360174693	208	1-3	7.5	36	24	650	38 lbs
◆	MUH108-PRO	685360173849	208	1-3	10	48	24	650	38 lbs
◆	MUH108-PRO-SSP	685360174716	208	1-3	10	48	24	650	38 lbs
◆	MUH0321-PRO	685360173856	208/240	1	2.2/3.0	11.0/12.5	24	350	27 lbs
◆	MUH0321-PRO-SSP	685360174617	208/240	1	2.2/3.0	11.0/12.5	24	350	27 lbs
◆	MUH0521-PRO	685360173863	208/240	1-3	3.7/5.0	18.0/21.0	24	350	27 lbs
◆	MUH0521-PRO-SSP	685360174648	208/240	1-3	3.7/5.0	18.0/21.0	24	350	27 lbs
◆	MUH072-PRO	685360173870	208/240	1-3	5.6/7.5	27.0/31.3	24	650	38 lbs
◆	MUH072-PRO-SSP	685360174679	208/240	1-3	5.6/7.5	27.0/31.3	24	650	38 lbs
◆	MUH102-PRO	685360173887	208/240	1-3	7.5/10.0	36.0/42.0	24	650	38 lbs
◆	MUH102-PRO-SSP	685360174662	208/240	1-3	7.5/10.0	36.0/42.0	24	650	38 lbs
◆	MUH0341-PRO	685360173894	480	3	3	3.6	24	350	27 lbs
◆	MUH0341-PRO-SSP	685360174624	480	3	3	3.6	24	350	27 lbs
◆	MUH0541-PRO	685360173900	480	3	5	6	24	350	27 lbs
◆	MUH0541-PRO-SSP	685360174655	480	3	5	6	24	350	27 lbs
◆	MUH074-PRO	685360173917	480	3	7.5	9	24	650	38 lbs
◆	MUH074-PRO-SSP	685360174686	480	3	7.5	9	24	650	38 lbs
◆	MUH104-PRO	685360173924	480	3	10	12	24	650	38 lbs
◆	MUH104-PRO-SSP	685360174709	480	3	10	12	24	650	38 lbs

SKU Legend: ◆ **= Popular Products;** ● **= Extended Offering** (Contact your local Marley Sales Representative for typically associated lead times)

"1-3" phase denotes field convertible to 3-Phase

NOTE: All standard units are supplied with a low voltage control transformer and contactor (24V). Reference the appropriate Bundled Accessory table below for the standard accessories available out of the box with each PRO and PRO+ model. Shipping weight includes mounting bracket

On dual-voltage units CFM, FPM, & RPM ratings are listed at higher voltage operation. On dual-phase units maximum amp draw is listed for respective voltage.

MUH-PRO SERIES
Bundled Unit Heater

Scan the QR code to access additional specs and features

MUH-Pro Bundled Accessories:

ACCESSORY	DESCRIPTION
24VAC Transformer	Takes incoming line voltage and drops it to low voltage (24VAC) to be used with low voltage thermostats.
Disconnect Switch	A three pole non-fused disconnect switch disconnects power to the heater. Design prevents entry into the control compartment until disconnect switch is turned to the OFF position.
Built-In Single Stage Thermostat	Built-in single stage thermostat with adjustable knob to have heater run until demand is satisfied.

MUH-Pro+ Bundled Accessories:

ACCESSORY	DESCRIPTION
24VAC Transformer	Takes incoming line voltage and drops it to low voltage (24VAC) to be used with low voltage thermostats.
Disconnect Switch	A three pole non-fused disconnect switch disconnects power to the heater. Design prevents entry into the control compartment until disconnect switch is turned to the OFF position.
SmartSeries® Plus thermostat	Remote Mount two stage thermostat runs 2/3 elements on stage 1 and full heat for stage 2. Fan cycles on high speed only. Comes with BACnet BMS compatibility, scheduling, cooling mode (Fan-Only), and keypad lock.
B10 mounting bracket	Used to easily mount the unit heater to the wall

Dimensions and Clearances:

CATALOG NO.	HEIGHT	WIDTH	DEPTH
MUH03 & 05	16″	14″	7 ½″
MUH07 & 10	21 ¾″	19″	7 ½″

	3–20 kW
A	7″
B	9 ½″
C	7 ¼″
D	11 5⁄16″
E	2 ¼″
L	20 ½″
M	9 15⁄16″
N	3 ¼″

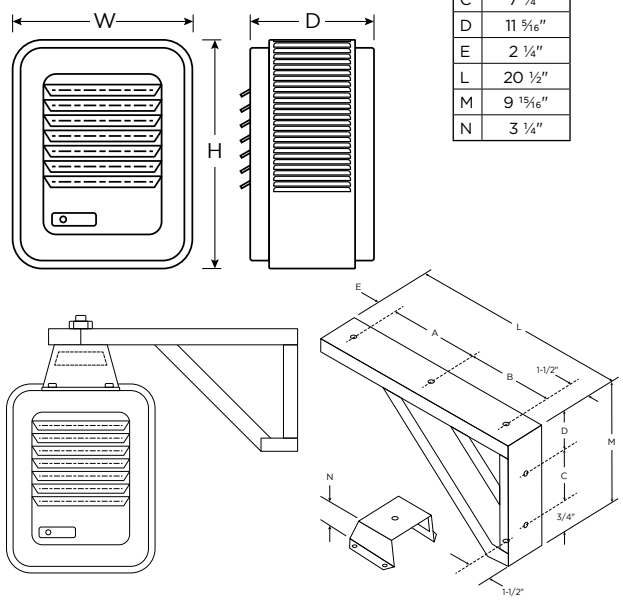

Optional Mounting Brackets:

	CATALOG NO.	UPC	COMPATIBILITY	SHIP WT.*
Standard	B10	685360152295	MUH03–10	8 lbs
Ceiling	CMB10	685360152363	MUH03–10	3 lbs
Vertical Ceiling	VDMB5	685360152455	MUH03–05	5 lbs
	VDMB20	685360152462	MUH07–20	7 lbs

Optional Dust Shields:

CATALOG NO.	UPC	COMPATIBILITY	SHIP WT.*
JRDS8	685360150697	3–10 KW units	5 lbs

MOUNTING LIMITATIONS: Unit heaters should not be used in potentially explosive atmospheres. The finish is not intended for direct salt spray exposure in marine applications or the highly corrosive atmospheres of swimming pools, chemical storage bins, etc. Do not install unit heaters above recommended maximum mounting height. Obstructions must not block unit heater air inlet or discharge. Heaters must be mounted at least 7 ft. above the floor to prevent accidental contact with the heating element or fan blade which could cause injury.

Diffuser Selector Tables for Vertical Mounting

CATALOG NO.	DESCRIPTION	COMPATIBILITY	MAX. MOUNTING HEIGHT	(A) DIMENSION	DIFFUSER PATTERN AND AREA
–	No Diffuser: No diffuser needed where a straight downflow air pattern is required. For maximum air throw, remove louvers. Any of three diffusers can be added to basic heater.	MUH03 & MUH05	9	18 (A)	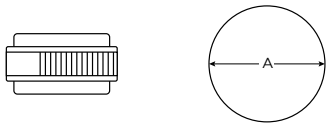
–		MUH07 & MUH10	14	26 (A)	
MLDS	Louver Diffuser: Permits directional (straight line) air flow as in air curtain application over doorways. Rectangular coverage, Louvers can be turned in either direction.	MUH03 & MUH05	9	25(A) 12(B)	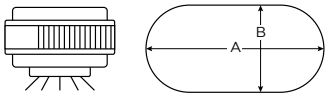
MLDM		MUH07 & MUH10	14	25(A) 12(B)	