Marley®
Engineered Products

DH Series
Portable Industrial Unit
Blower Air Heaters

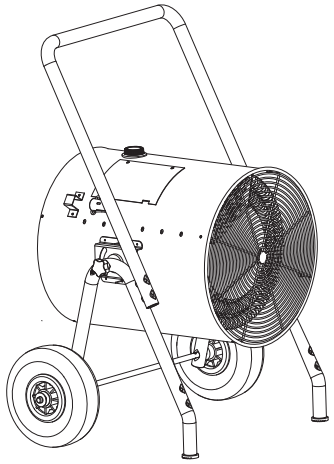

Installation, Operation & Maintenance Instructions

Table A- Model Specification and Cable / Plug Selection

MODEL NUMBER	KW	VOLTS	BTUH	PH	AMPS	WIRING DIAGRAM NUMBER	SHIP WT.	WIRE SIZE	25 ft CORD SET	OPTIONAL PLUGS Locking Type	OPTIONAL PLUGS Non-Lock Type
DH1021CKD	10	240	34,120	1	41.7	WD4	65 lbs	6/3	SCS10063*	–	–
DH1583CKD	15	208	51,180	3	41.8	WD5	65 lbs	6/4	SCS25064	–	NPS1550
DH1521D	15	240	51,180	1	62.5	WD2	65 lbs	4/3	SCS25043	–	N6-50
DH1523D	15	240	51,180	3	36.3	WD1	65 lbs	6/4	SCS25064	–	NPS1550
DH1543CKD	15	480	51,180	3	18.2	WD3	65 lbs	12/4	SCS25124	LPS25104	–
DH3043D	30	480	102,360	3	36.3	WD6	75 lbs	6/4	SCS25064	LPS25064	–

* Cordset SCS10063 is 8 feet long with attached 50 amp, 250 volt, non-locking plug and is included with model DH1021CKD.
* Cordset SCS25064 is 25 feet long with unattached 50 amp, 480 volt, locking plug and is included with model DH1583CKD.
* Cordset SCS25124 is 25 feet long with unattached 50 amp, 480 volt, locking plug and is included with model DH1543CKD.

IMPORTANT INSTRUCTIONS

⚠ WARNING ⚠

When using electrical appliances, basic precautions should always be followed to reduce the risk of fire, electric shock and injury to persons, including the following:

1. Read all instructions before using this heater.
2. Verify the power supply voltage coming to the heater match-es the ratings printed on the heater nameplate before ener-gizing.
3. This heater is hot when in use. To avoid burns, do not let bare skin touch hot surfaces. If provided, use handles when moving this heater. Keep combustible materials, such as furniture, pillows, bedding, papers, clothes, and curtains at least 3 feet (0.9 m) from the front of the heater and keep them away from the sides and rear.
4. Extreme caution is necessary when any heater is used by or near children or handicapped individuals and whenever the heater is left operating and unattended.
5. Always disconnect heater when not in use.
6. Do not operate any heater with a damaged cord or plug or after the heater malfunctions, has been dropped or damaged in any manner. Return heater to authorized service facility for examination, electrical or mechanical adjustments, or repair.
7. Do not use outdoors.
8. This heater is not intended for use in bathrooms, laundry areas and similar indoor locations. Never locate heater where it may fall into a bathtub or other water container.
9. Do not run cord under carpeting. Do not cover cord with throw rugs, runners or the like. Arrange cord away from traffic area and where it will not be tripped over.
10. To disconnect heater, turn thermostat to fan only for 3 minutes, then turn to OFF, then remove plug from outlet.
11. Connect to properly grounded outlets only.
12. Do not insert or allow foreign objects to enter any ventilation or exhaust opening as this may cause an electric shock, fire or damage the heater.
13. To prevent a possible fire, do not block air intakes or exhaust in any manner. Do not use on soft surfaces, like a bed, where opening may become blocked.
14. A heater has hot and arcing or sparking parts inside.Do not use it in areas where gasoline, paint or flammable liquids are used or stored.
15. Use this heater only as described in this manual. Any other use not recommended by the manufacturer may cause fire, electric shock or injury to persons.
16. This heater is not intended for use with an extension cord.
17. Save these instructions.

SAVE THESE INSTRUCTIONS

⚠ WARNING ⚠

RISK OF FIRE. DO NOT USE AS A RESIDENTIAL OR HOUSEHOLD HEATER.

⚠ WARNING ⚠

HAZARD OF FIRE OR DISCOLORATION OF TEMPERATURE SENSITIVE FABRICS. DO NOT USE AS A RESIDENTIAL OR HOUSEHOLD HEATER. KEEP COMBUSTIBLE MATERIAL AND SUCH FABRICS AWAY FROM HEATER. DO NOT OPERATE HEATER WHERE FLAMMABLE VAPORS, GASES OR LIQUIDS ARE PRESENT. HEATERS IN THE HEAT MODE SHOULD NOT BE OPERATED IN ROOM TEMPERATURES ABOVE 80°F. FAN MOTOR IS NOT DESIGNED TO OPERATE IN AMBIENTS BELOW -40°F.
TO AVOID PERSONAL INJURY READ **"IMPORTANT INSTRUCTIONS"** BEFORE INSTALLATION OR OPERATION OF HEATER.

⚠ WARNING ⚠

KEEP ELECTRICAL CORDS AND COMBUSTIBLE MATERIALS, SUCH AS DRAPES AND OTHER FURNISHINGS, AWAY FROM HEATER.

INSTALLATION INSTRUCTIONS

Assembly of Heater

Heaters are shipped unassembled and can be assembled easily by following the steps below.

Support Legs and Axle Assembly (Figure 1)

1. Set barrel drum on soft surface with slotted portion of side brackets facing down.
2. Place a washer onto each end of the axle and then slide the legs over the axle until they are against the axle stops. Make sure the legs are oriented so the tilt guide pins face in (see Figure 1).

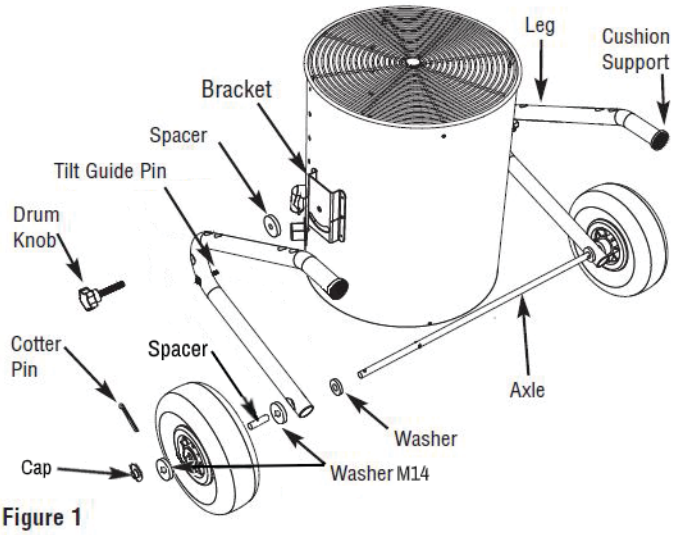

Figure 1

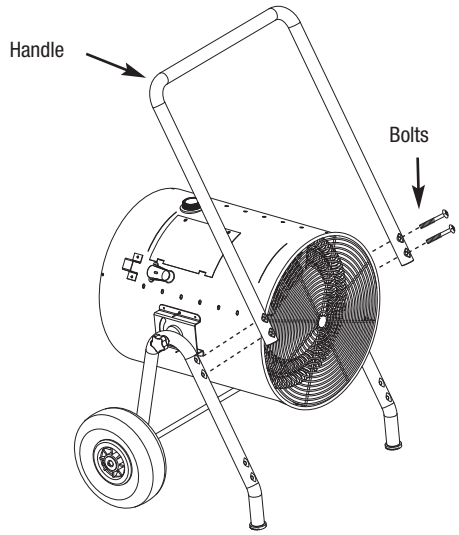

Figure 2

3. Align the leg assembly to the bracket on the drum and insert the drum knobs and spacers on either side of the drum, making sure the tilt guide pins are in the tilt guide track. The access panel and thermostat knob should be on the opposite side(top) from the axle assembly.

4. Slide a M14 washer through the axle followed by a spacer. Slide a wheel over the spacer until the wheel and spacer are butted against the M14 washer. Ensure the air stem on the wheel is facing outwards. Slide another M14 washer on the axle then put a cotter pin through the cotter pin hole. Finally, attach the shaft cap. Repeat directions for opposite side.

Handle Assembly (Figure 2)
To position handle, line up with the holes in the handle with upper holes in the support legs and insert bolts to secure the handle in the full upright position.

Optional Wall/Ceiling Mounting Bracket – Model DHCWM

NOTE: For installation of flexible cords, see WIRING INSTRUCTIONS.

1. Remove the drum knobs and stop bolts, then remove the housing from the cart (refer to exploded view, page 6).
2. Assemble hanger to heater as shown in Figure 4. Install the drum knob and stop brackets as shown.
3. Secure mounting bracket to a surface that can support the weight of the heater (refer to Table A for unit weight).
4. Loop secondary support cable through bracket as shown in Figure 5. Secure ends with two cable clamps. Loop other end of cable around any permanent structural member close to fan.

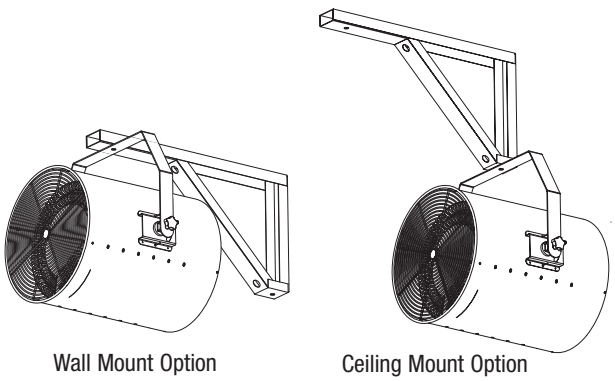

Figure 3 – DHCWM Mounting Bracket

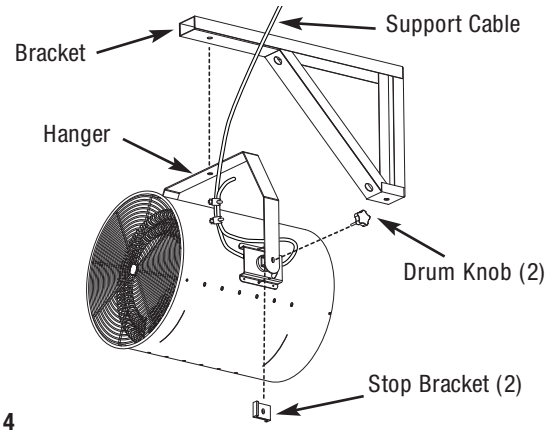

Figure 4

IMPORTANT: Note the proper installation position of the cable clamps as illustrated. To obtain maximum holding power, install U-bolt section of clip on dead or short end of cable and saddle on long end of cable as shown. Improper installation reduces the efficiency of the connection by as much as 40 percent.

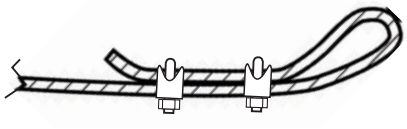

Figure 5

⚠ WARNING ⚠

FALLING HAZARD. WALL BRACKET MUST BE RELIABLY ATTACHED TO BUILDING USING APPROPRIATE HARDWARE. TEST TO MAKE SURE WALL BRACKET CAN SAFELY AND RELIABLY SUPPORT AT LEAST 100 LBS BEFORE INSTALLING HEATER.

5. Attach heater to bracket using the desired configuration shown in Figure 3.

NOTE: The bottom of the heater must be mounted at least 6 feet from the floor and 2 feet from the ceiling.

WIRING

⚠ WARNING ⚠

ELECTRIC SHOCK HAZARD. DISCONNECT ALL POWER BEFORE INSTALLING OR SERVICING HEATER. FAILURE TO DO SO COULD RESULT IN PERSONAL INJURY OR PROPERTY DAMAGE. HEATER MUST BE EFFECTIVELY GROUNDED IN ACCORDANCE WITH THE NATIONAL ELECTRICAL CODE, NFPA 70.

1. Use heater only at the voltage and frequency specified on the nameplate.
2. All wiring should be done in accordance with local codes and the National Electrical Code by a qualified person.
3. Branch circuit wire for connection to heater must be at least 90°C wire.
4. The top access panel is secured by 4 screws that must be loosened to gain access.
5. A ground terminal is provided near the power terminal board. The ground wire should be connected before other connections are made.
6. Refer to Specifications for proper size “SO” grade cable.
7. A proper strain relief must be used with “SO” grade cable.
8. Refer to the appropriate wiring diagram for your model in this manual (page 4). The appropriate wiring diagram is also located on the back of the wiring compartment cover.

⚠ WARNING ⚠

ALL CONNECTIONS MUST BE TIGHT WITH ALL COPPER WIRE STRANDS WITHIN THE CONNECTOR. A LOOSE OR IMPROPERLY INSTALLED CONNECTOR CAN HEAT AND COULD FAIL OR POSSIBLY CAUSE A FIRE HAZARD.

Cord Assembly

1. Determine the gauge and number of conductors from the Specifications (Table A) using amps and phase from the heater nameplate. It is not recommended that cord exceed 50 feet in length.
2. Strip off outer jacket of cord and insulation from lead wires. Figure 6 provides the strip dimensions.

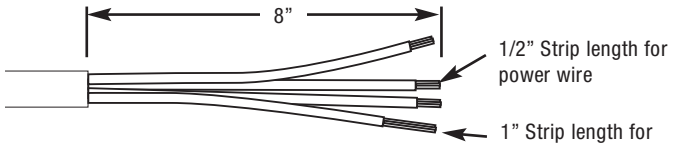

Figure 6

3. Slide 90° fitting onto cord and tighten strain relief to secure fitting to cord.
4. Select plug (sold separately) to match electrical rating of cord.
5. On opposite end of cord prepare end as directed by instructions that are provided with the plug.

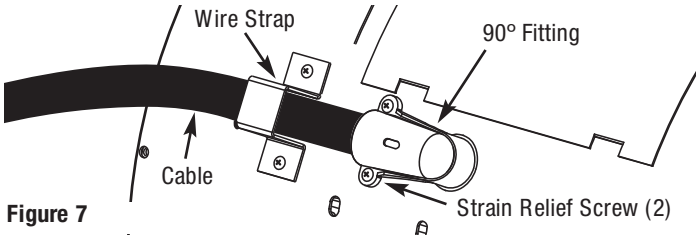

Figure 7

6. Attach cord assembly to heater (Figure 7). Refer to appropriate wiring diagram for your model (page 4).

⚠ WARNING ⚠

ALL CONNECTIONS MUST BE TIGHT WITH ALL COPPER WIRE STRANDS WITHIN THE CONNECTOR. A LOOSE OR IMPROPERLY INSTALLED CONNECTOR CAN HEAT AND COULD FAIL OR POSSIBLY CAUSE A FIRE HAZARD.

OPERATION

DH Series Industrial Heaters are designed to gradually increase the room temperature by circulating air across the heating element. Best results occur when using the heater in confined spaces with standard ceiling heights. Heaters include a bimetal thermostat for the automatic control of the exiting air temperature. The thermostat knob controls the heating elements and fan functions. The heater and fan are de-energized with the knob in the extreme counterclockwise position. Turning the knob clockwise from the off position to the fan position will energize the fan only, for use in summer cooling. The adjustment knob controls power to the heater and fan when turned further in the clockwise direction, with the highest temperature setting in the extreme clockwise position. The temperature setting in the heater mode is approximately 40°F in the low setting and 100°F at the highest setting.

IMPORTANT: Cool down cycle. After operating in the heating mode, when shutting down unit, always rotate control to the fan only position and allow unit to cool down for at least three minutes. This will extend the life of the unit.

NOTE: Some models are equipped with an additional fan delay feature. It is possible that the fan blade may start without warning.

Plug Specifications (for reference only)

Fits Cable Dia. #	Plug Type	Model	Description	Volts	Amps	Configuration	NEMA #	ANSI
.385”-.780”	Locking	LPS25124	3 Pole, 4 Wire	250	20		L15-20	
C73.85								
.595”-1.150”	Locking	LPS25104	3 Pole, 4 Wire	480	30		L16-30	
C73.88								
.595”-1.150”	Locking	LPS25084	3 Pole, 4 Wire	600	30		L17-30	
C73.89								
.750”-1.125”	Locking	LPS25083	2 Pole, 4 Wire	600	50		—	—
.750”-1.125”	Locking	LPS25064	3 Pole, 4 Wire	600	50		—	—

DH Series Industrial Heaters are equipped with an over temperature limit that will shut the heater down in the event of over-heating.

NOTE: Should the unit activate the over temperature limit, the cause of overheating should be determined before further operation. Check heater to ensure it has not been blocked in any manner, if so remove blockage. If there is no indication of blockage, it is recommended the heater be checked by a qualified electrician or repair service to ensure the heater has not been damaged.

MAINTENANCE

⚠ WARNING ⚠

ELECTRIC SHOCK HAZARD. DISCONNECT HEATER FROM POWER SUPPLY BEFORE SERVICING AND/OR INSPECTING THE HEATER; FAILURE TO DO SO MAY RESULT IN ELECTRICAL SHOCK.

CAUTION ⚠

ALLOW HEATER TO COOL COMPLETELY BEFORE SERVICING OR CLEANING.

Replace or repair damaged cords or plugs immediately. Check tightness of all electrical connections prior to energizing the heater. Blow with compressed air or vacuum away any dirt or debris that may have accumulated around the control enclosure, fan motor or heating elements. The heater housing can be wiped clean with a clean damp rag.

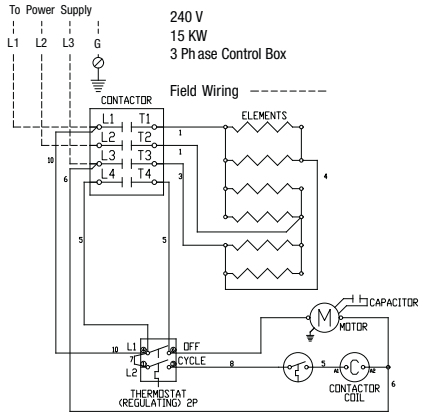

Wiring Diagram 1 - 240V / 15KW, 3 Phase

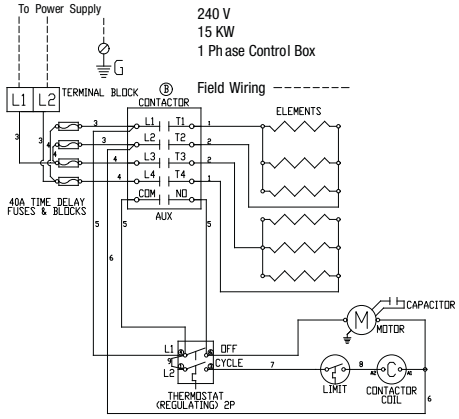

Wiring Diagram 2 – 240V / 15KW, 1 Phase

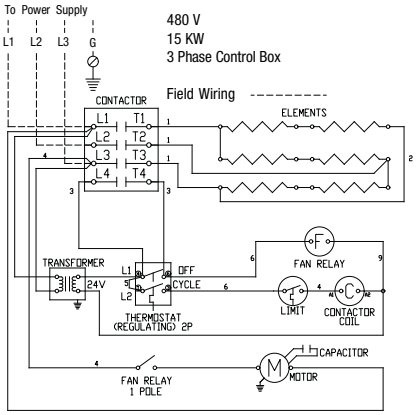

Wiring Diagram 3 – 480V / 15KW, 3 Phase

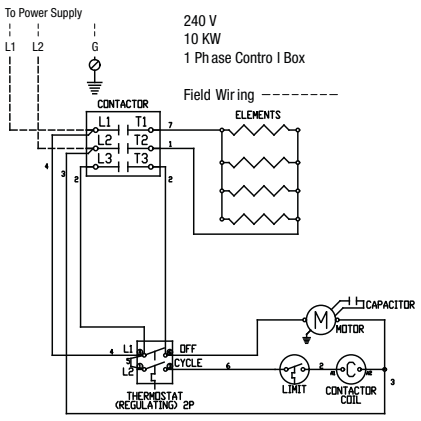

Wiring Diagram 4 – 240V / 10KW, 1 Phase

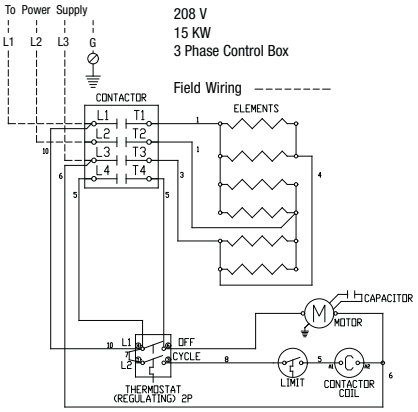

Wiring Diagram 5 – 208V / 15KW, 3 Phase

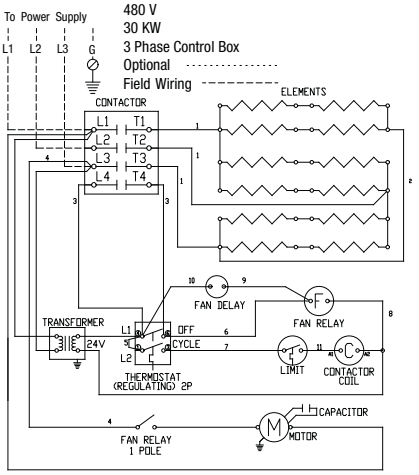

Wiring Diagram 6 – 480V / 30KW, 3 Phase

REPLACEMENT PARTS

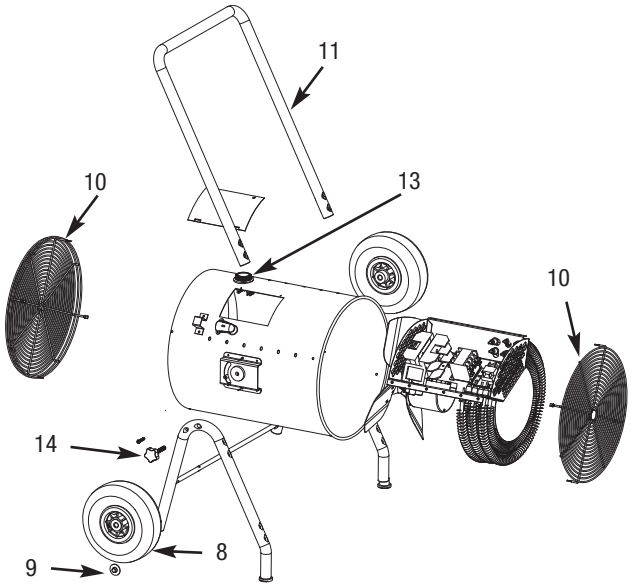

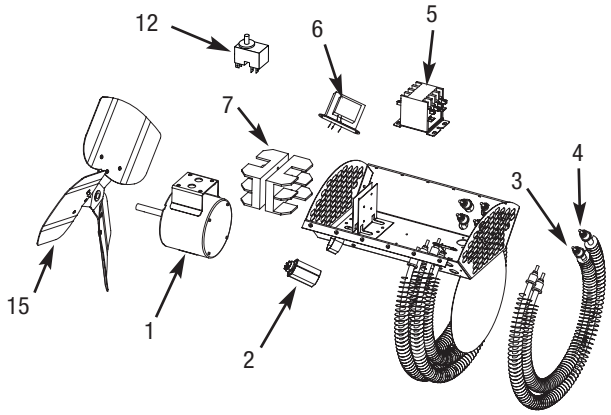

REFERENCE NUMBER	DESCRIPTION	PART NUMBER FOR MODELS: DH1523D	DH1521D	DH1543D	QTY.
1	Motor	3900-11002-000	3900-11002-000	3900-11002-000	1
2	Motor Capacitor	1432-0002-003	1432-0002-003	1432-0002-003	1
3	Inside Element	1802-11001-002	1802-11001-002	1802-11001-002	3
4	Outside Element	1802-11001-003	1802-11001-003	1802-11001-003	3
5	Contactor	5018-0006-007	5018-0006-007	5018-0006-009	1
6	Transformer	–	–	5814-0003-002	1
7	Fuse Block	–	4800-30-007	–	2
8	Wheel	6406-0002-000	6406-0002-000	6406-0002-000	2
9	Axle Cap	1408-11002-000	1408-11002-000	1408-11002-000	2
10	Barrel Grille	2504-11006-000	2504-11006-000	2504-11006-000	2
11	Tube Handle	2710-11001-000	2710-11001-000	2710-11001-000	1
12	Thermostat	5813-2059-000	5813-2059-000	5813-2059-000	1
13	Thermostat Knob	3301-11018-002	3301-11018-002	3301-11018-002	1
14	Drum Knob	3301-11003-000	3301-11003-000	3301-11003-000	2
15	Fan Blade	1210-0098-001	1210-0098-001	1210-0098-001	1
Not shown	Fuse	–	2019-7008-077	–	4

Reference Number	Description	Part Number for Models: DH1021CKD	DH1583D	DH3043D	Qty.
1	Motor	3900-11002-000	3900-11002-000	3900-11002-000	1
2	Motor Capacitor	1432-0002-003	1432-0002-003	1432-0002-003	1
3	Inside Element (qty)	1802-11001-002(2)	1802-11001-002(3)	1802-11001-002(6)	–
4	Outside Element (qty)	1802-11001-003(2)	1802-11001-001(3)	1802-11001-003(6)	–
5	Contactor	5018-0006-004	5018-0006-007	5018-0006-009	1
6	Transformer	–	–	5814-0003-002	1
7	Fuse Block	–	–	–	–
8	Wheel	6406-0002-000	6406-0002-000	6406-0002-000	2
9	Axle Cap	1408-11002-000	1408-11002-000	1408-11002-000	2
10	Barrel Grille	2504-11006-000	2504-11006-000	2504-11006-000	2
11	Tube Handle	2710-11001-000	2710-11001-000	2710-11001-000	1
12	Thermostat	5813-2059-000	5813-2059-000	5813-2059-000	1
13	Thermostat Knob	3301-11018-002	3301-11018-002	3301-11018-002	1
14	Drum Knob	3301-11003-000	3301-11003-000	3301-11003-000	2
15	Fan Blade	1210-0098-001	1210-0098-001	1210-0098-001	1

LIMITED WARRANTY

All products manufactured by Marley Engineered Products are warranted against defects in workmanship and materials for one year from date of installation, except heating elements which are warranted against defects in workmanship and materials for five years from date of installation. This warranty does not apply to damage from accident, misuse, or alteration; nor where the connected voltage is more than 5% above the nameplate voltage; nor to equipment improperly installed or wired or maintained in violation of the product's installation instructions. All claims for warranty work must be accompanied by proof of the date of installation.

The customer shall be responsible for all costs incurred in the removal or reinstallation of products, including labor costs, and shipping costs incurred to return products to Marley Engineered Products Service Center. Within the limitations of this warranty, inoperative units should be returned to the nearest Marley authorized service center or the Marley Engineered Products Service Center, and we will repair or replace, at our option, at no charge to you with return freight paid by Marley. It is agreed that such repair or replacement is the exclusive remedy available from Marley Engineered Products.

THE ABOVE WARRANTIES ARE IN LIEU OF ALL OTHER WARRANTIES EXPRESSED OR IMPLIED, AND ALL IMPLIED WARRANTIES OF MERCHANTABILITY AND FITNESS FOR A PARTICULAR PURPOSE WHICH EXCEED THE AFORESAID EXPRESSED WARRANTIES ARE HEREBY DISCLAIMED AND EXCLUDED FROM THIS AGREEMENT. MARLEY ENGINEERED PRODUCTS SHALL NOT BE LIABLE FOR CONSEQUENTIAL DAMAGES ARISING WITH RESPECT TO THE PRODUCT, WHETHER BASED UPON NEGLIGENCE, TORT, STRICT LIABILITY, OR CONTRACT.

Some states do not allow the exclusion or limitation of incidental or consequential damages, so the above exclusion or limitation may not apply to you. This warranty gives you specific legal rights, and you may also have other rights which vary from state to state.

For the address of your nearest authorized service center, contact Marley Engineered Products in Bennettsville, SC, at 1-800-642-4328. Merchandise returned to the factory must be accompanied by a return authorization and service identification tag, both available from Marley Engineered Products. When requesting return authorization, include all catalog numbers shown on the products.

HOW TO OBTAIN WARRANTY SERVICE AND WARRANTY PARTS PLUS GENERAL INFORMATION

1. Warranty Service or Parts **1-800-642-4328**
2. Purchase Replacement Parts **1-800-654-3545**
3. General Product Information **www.marleymep.com**

Note: When obtaining service always have the following:

1. Model number of the product
2. Date of manufacture
3. Part number or description

Marley® Engineered Products
470 Beauty Spot Rd. East
Bennettsville, SC 29512 USA