ATTENTION:

Due to differences in drum lengths on this series of heaters, we have provided two sets of the stopper (see Figures 1 & 2). Depending on the unit you have one of the two sets will engage the crescent shape slot of the bracket on the side of the drum.
Small: DH1523C, DH1521C, DH1543C, DH1021C, DH1583C
Large: DH3043C

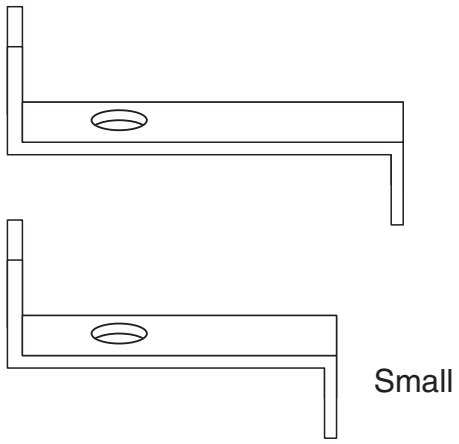

ECR40708

MODEL DHCWN STOPPER

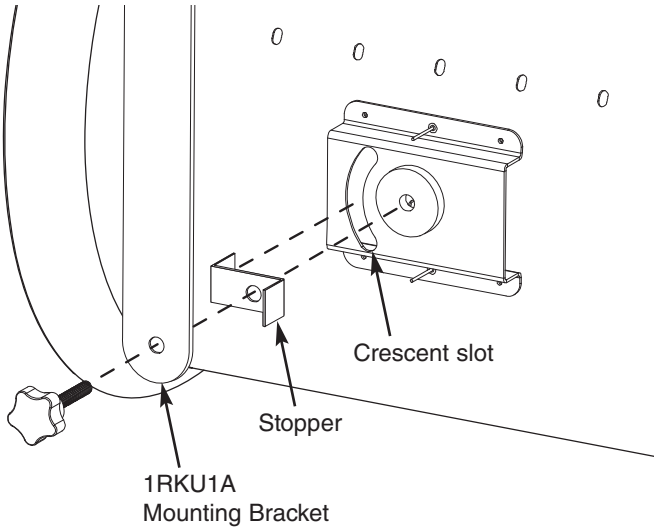

Part No: 5200-11020-001

ATTENTION:

Due to differences in drum lengths on this series of heaters, we have provided two sets of the stopper (see Figures 1 & 2). Depending on the unit you have one of the two sets will engage the crescent shape slot of the bracket on the side of the drum.
Small: DH1523C, DH1521C, DH1543C, DH1021C, DH1583C
Large: DH3043C

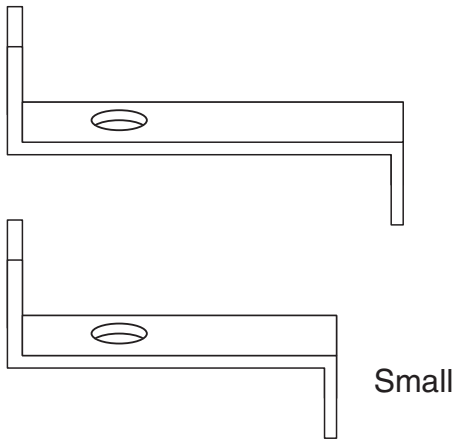

ECR40708

MODEL DHCWN STOPPER

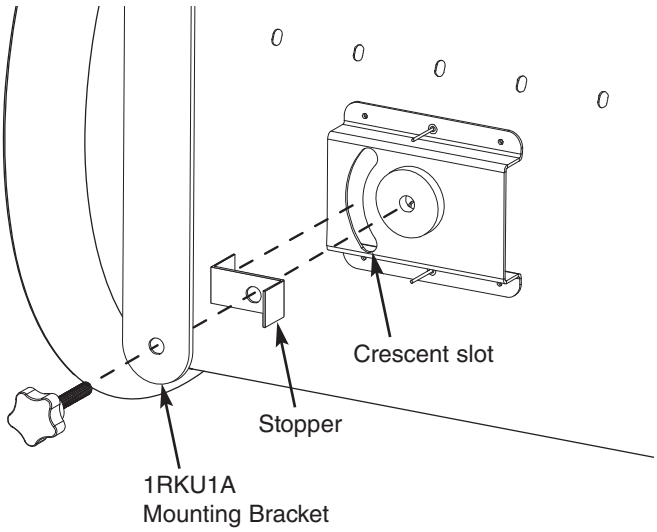

Part No: 5200-11020-001