Marley Engineered Products

# RK Series Infrared Heaters

c UL us
FILE #E21609

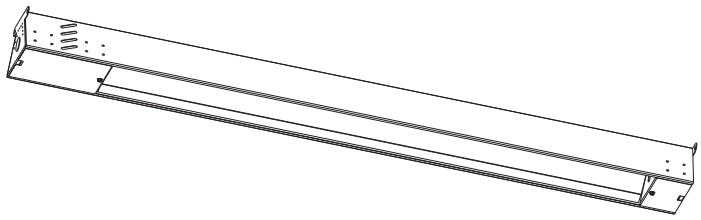

# *Installation & Maintenance Instructions*

*Dear Owner,*

*Congratulations! Thank you for purchasing this new heater manufactured by Marley Engineered Products. You have made a wise investment selecting the highest quality product in the heating industry. Please carefully read the installation and maintenance instructions shown in this manual. You should enjoy years of efficient heating comfort with this product from Marley Engineered Products... the industry's leader in design, manufacturing, quality and service.*

*... The Employees of*
*Marley Engineered Products*

## WARNING

**Read Carefully** - This instruction sheet contains vital information for the proper installation, use and efficient operation of the heater. Carefully read the manual before installation, operation, or cleaning of the heater. Failure to adhere to the instructions could result in fire, electric shock, death, serious personal injury, or property damage. Save these instructions and review frequently for continuing safe operation and instructing future users.
**RISK OF FIRE, ELECTRICAL SHOCK OR FALLING**:

1. To prevent electrical shock, disconnect all power coming to heater at main service panel before wiring or servicing.
2. All wiring must be in accordance with the National and Local Electrical Codes and the heater must be grounded as a precaution against possible electric shock.
3. Verify the power supply voltage coming to heater matches the ratings printed on the heater nameplate before energizing.
4. This heater is NOT suitable for use in hazardous locations as described by the National Fire Protection Association (NFPA). This heater has hot and arcing or sparking parts inside. DO NOT use in areas where gasoline, paint, or other flammable liquids or stored.
5. This heater is intended for ceiling installation ONLY. The following clearances MUST be maintained:
   a) Top of heater to ceiling - 3 in (76 mm).
   b) Bottom of heater to floor - 8 ft (2.3m).
   c) Side of heater to wall - 12 in (305 mm).
   d) End of heater to wall - 12 in (305 mm).
   e) Side of heater to side of adjacent heater - 36 in (914 mm).
   f) End of heater to end of adjacent heater - 36 in (914 mm).
6. Heater MUST be securely fastened to the building structure to prevent it from falling.
7. DO NOT stack or store combustible materials in the radiation path under the heater. At least 5 feet (150 mm) clearance MUST be maintained between bottom of heater and combustibles stored.

## SAVE THESE INSTRUCTIONS

## CAUTION

**DO NOT HANDLE QUARTZ LAMP OR QUARTZ TUBE HEATING ELEMENTS WITH BARE HANDS AS SALT IN PERSPIRATION MAY DETERIORATE THE QUARTZ.**

**INSTALLATION OF ELEMENTS**

1. Place heater on flat surface and remove both wiring compartment covers.
2. Remove the outside hex nut from both ends of the element.
3. Place the element in the "L" shaped slots in the heater housing.
4. Install ring terminal on factory installed wire assemblies on the threaded studs on both sides of element. See Fig. 1.

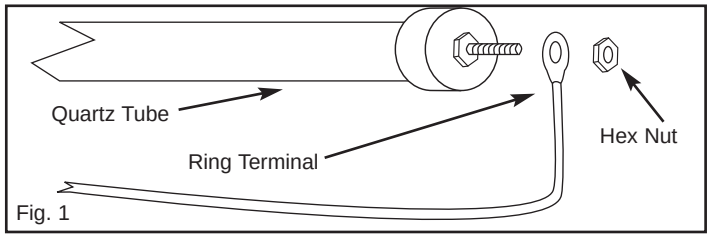

Fig. 1

5. Replace hex nut and secure
6. Replace wiring compartment covers.

**APPLICATION LIMITATION AND PRECAUTIONS**

- **Hazardous Atmosphere** - These heaters are ***not*** suitable for use in hazardous locations.
- **Indoor Use Only**
- **Ceiling Mount Only** - Do not mount to walls.
- **Maintain at least** 5' (1.5 m) in radiant path between bottom of heater and combustible material.
- **Corrosive Atmospheres** - The high quality finish and steel internal sheet metal parts will give excellent service under most operation conditions, including coastal salt air and most industrial atmospheres. However, the finish is not intended for salt spray exposure in marine applications or highly corrosive greenhouse, swimming pool, chemical storage or industrial atmospheres.
- **The mounting structure and anchoring hardware** must be capable of reliably supporting the total weight of the heater and all accessories.

## HEATER SELECTION CHART

| Model No. | Volts | Watts | Reflective Angle | Dimensions Height in. (mm) | Dimensions Width in. (mm) | Dimensions Length in. (mm) | Wt. lb (kg.) |
|---|---|---|---|---|---|---|---|
| RK41512 | 120 | 1500 | 60 (Sym) | 3.375 (86) | 5.5(140) | 46 (1168) | 9 (4.1) |
| RK42020 | 208 | 2000 | | | | | |
| RK42024 | 240 | 2000 | | | | | |
| RK42027 | 277 | 2000 | | | | | |
| RK42034 | 347 | 2000 | | | | | |
| RK42048 | 480 | 2000 | | | | | |
| RK42060 | 600 | 2000 | | | | | |
| RK53020 | 208 | 3000 | | | | 57 (1448) | 11 (5.0) |
| RK53024 | 240 | | | | | | |
| RK53027 | 277 | | | | | | |
| RK53034 | 347 | | | | | | |
| RK53048 | 480 | | | | | | |
| RK53060 | 600 | | | | | | |

## OPTIONAL MECHANICAL ACCESSORIES

| Model No. | Description | Carton Qty. | Wt. lbs (gr.) |
|---|---|---|---|
| WG46 | Wire Guard | 1 | 1 (454) |
| WG57 | | | 1.5 (680) |
| RP-WMB | Wall Mounting Bracket | 1 | 2 (907) |

**HOW TO OBTAIN WARRANTY SERVICE AND WARRANTY PARTS PLUS GENERAL INFORMATION**

1. Warranty Service or Parts **1-800-642-4328**
2. Purchase Replacement Parts **1-800-654-3545**
3. General Product Information **www.marleymep.com**

**Note:** When obtaining service always have the following:
1. Model number of the product
2. Date of manufacture
3. Part number or description


Marley Engineered Products

**470 Beauty Spot Rd. East**
**Bennettsville, SC 29512 USA**




**INSTALLATION OF HEATER**

1. Cut suspension chain (approved) to desired mounting length.
2. Attach chain to heater with "S" hooks provided. Heater must be mounted so that element is horizontal
3. Tilt heater (if desired) by adjusting chains as shown in Fig 2.

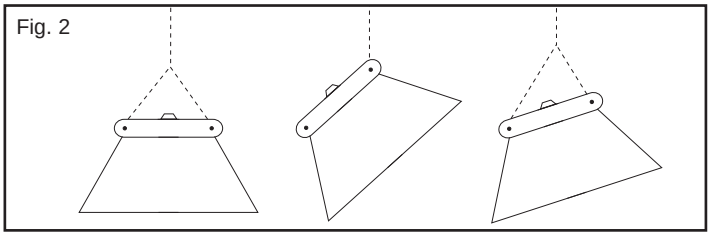
Fig. 2

**WIRING**

1. Supply wiring coming to heater must be rated at least 90 degrees C. USE COPPER WIRING ONLY.
2. Rough-in Wiring. Run supply wiring to the heater location (Check heater nameplate and element for proper supply voltage.) Check the amperage of the heater (refer to nameplate on heater) and verify the supply wiring is properly fused.
3. Wire heaters as shown in Fig. 3.

## WARNING

SUPPLY WIRING MUST BE SIZED FOR MAXIMUM WATTAGE OF HEATER WITH QUARTZ TUBE.

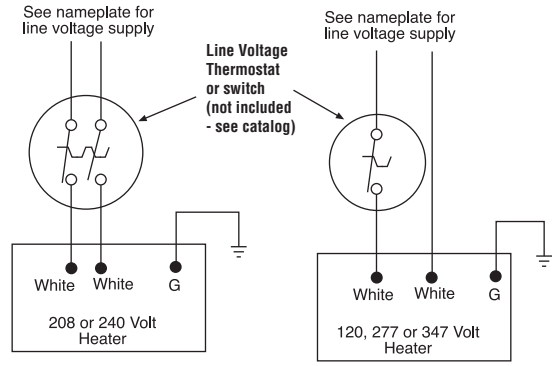

Fig. 3

## LIMITED WARRANTY

All products manufactured by Marley Engineered Products are warranted against defects in workmanship and materials for one year from date of installation, except heating elements which are warranted against defects in workmanship and materials for two years from date of installation. This warranty does not apply to damage from accident, misuse, or alteration; nor where the connected voltage is more than 5% above the nameplate voltage; nor to equipment improperly installed or wired or maintained in violation of the product's installation instructions. All claims for warranty work must be accompanied by proof of the date of installation.

The customer shall be responsible for all costs incurred in the removal or reinstallation of products, including labor costs, and shipping costs incurred to return products to Marley Engineered Products Service Center.Within the limitations of this warranty, inoperative units should be returned to the nearest Marley authorized service center or the Marley Engineered Products Service Center, and we will repair or replace, at our option, at no charge to you with return freight paid by Marley. It is agreed that such repair or replacement is the exclusive remedy available from Marley Engineered Products.

THE ABOVE WARRANTIES ARE IN LIEU OF ALL OTHER WARRANTIES EXPRESSED OR IMPLIED, AND ALL IMPLIED WARRANTIES OF MERCHANTABILITY AND FITNESS FOR A PARTICULAR PURPOSE WHICH EXCEED THE AFORESAID EXPRESSED WARRANTIES ARE HEREBY DISCLAIMED AND EXCLUDED FROM THIS AGREEMENT. MARLEY ENGINEERED PRODUCTS SHALL NOT BE LIABLE FOR CONSEQUENTIAL DAMAGES ARISING WITH RESPECT TO THE PRODUCT, WHETHER BASED UPON NEGLIGENCE, TORT, STRICT LIABILITY, OR CONTRACT.

Some states do not allow the exclusion or limitation of incidental or consequential damages, so the above exclusion or limitation may not apply to you. This warranty gives you specific legal rights, and you may also have other rights which vary from state to state.

For the address of your nearest authorized service center, contact Marley Engineered Products in Bennettsville, SC, at 1-800-642-4328. Merchandise returned to the factory must be accompanied by a return authorization and service identification tag, both available from Marley Engineered Products. When requesting return authorization, include all catalog numbers shown on the products.