470 Beauty Spot Rd. E
Bennettsville, SC 29512

SUBMITTAL SHEET
MWUH SERIES
BUNDLED HORIZONTAL/ DOWNFLOW UNIT HEATER

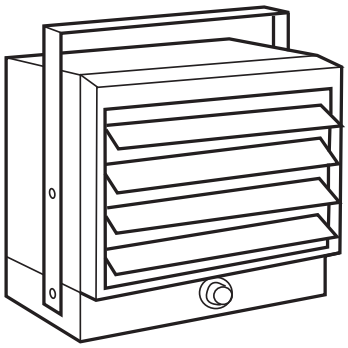

CAPACITIES
1874–7500 Watts 208 or 240V 1Ø only Thermostat Range: 45°–90° F Air Movement: 270 CFM

See Selection Chart for all Options

MWUH SERIES – BUNDLED HORIZONTAL/DOWNFLOW UNIT HEATER

JOB NAME: _____

LOCATION: _____

ARCHITECT: _____

ENGINEER: _____

CONTRACTOR: _____

SUBMITTED BY: _____ DATE: _____

TAG/ITEM	QTY.	CATALOG NUMBER	HEATER			AMPS	CONTROL CKT. VOLTS	MOTOR VOLT	AIR FLOW		NO. OF STAGES	BUILT-IN CNTRL.
			KW	VOLTS	Ø				CFM	F° RISE		

ACCESSORIES AND CONTROLS	TAG/ITEM	QTY.	CATALOG NUMBER	DESCRIPTION

SUBMITTED BY:	DATE

APPROVED BY:	DATE

MWUH SERIES

ARCHITECT'S AND ENGINEER'S SPECIFICATIONS*

The electric unit heater(s) shall be as manufactured by QMark®, A Marley Engineered Products® Brand, Bennettsville, SC. Heater(s) shall be fully UL approved, designed for either wall or ceiling mounting without modification and operate at either 208 or 240VAC and have field-adjustable capacity from 1.874 to

5kW (Model MWUH5004) and 2.812 to 7.5kW (Model MWUH7504).

HOUSING: The cabinet shall be of heavy gauge steel, welded and phosphatized; then completely painted beige by a baked enamel painting process. Front and back panels shall be removable to gain full access to element, motor and fan area. Fan guard shall be painted to match heater for appearance and durability. Heater(s) shall be furnished with attached ceiling mounting bracket and shall have capability of full horizontal and vertical positioning. Heater(s) shall be so designed as to permit mounting within two inches of the ceiling in full horizontal mode.

CONTROL BOX: The control box, housing all heater wiring and controls, shall be located at the bottom of the heater and equipped with a swing down hinged cover to permit full access for installation and servicing without dismounting the heater.

WIRING: All heater and control wiring connections shall terminate in the control box. Proper wiring diagram shall be attached to the inside of the control box cover. 60° C wire may be used to bring entry wiring into compartment.

FAN MOTOR: Fan motor shall be totally enclosed, impedance protected and of unit bearing design suitable for horizontal or vertical operation with high starting and running torques. Fan motor and controls shall operate directly from the line voltage.

HEATING ELEMENT: The heating element shall be warrantied for five years and shall be of non-glowing design consisting of a special resistance wire enclosed in the steel sheath to which steel plate fins are brazed. The heating element shall cover the entire air discharge area for uniform heating.

THERMAL CUTOUT: Thermal cutout shall be built into the system to automatically shut off heater in event of overheating and reactivate the heater when temperatures return to normal.

**QMark reserves the right to change specifications without prior notice.*

Models & Specifications:

ITEM INFORMATION		ELECTRICAL DATA				
CATALOG NO.	UPC	VOLTS	WATTS	BTU/HR.	HEATER AMPS	SHIP WT.
MWUH5004	685360038803	208	1874	6396	9	24 lbs
			2500	8553	12	
			3123	10659	15	
			3750	12799	18	
		240	2500	8533	10.4	
			3332	11365	13.9	
			4165	14215	17.4	
			5000	17065	20.9	
MWUH7504	685360148700	208	2812	9598	13.5	27 lbs
			3750	12799	18	
			4685	15990	22.5	
			5625	19198	27.1	
		240	3750	12799	15.6	
			5000	17065	20.8	
			6250	21331	26	
			7500	25598	31.3	
MWUH5008	685360047713	208	2500	8533	12	26 lbs
			3332	11365	16	
			4165	14215	20	
			5000	17065	24	

NOTE: Disconnect switch (DS30) option available for heaters 24 amps or lower. Units come factory wired to higher wattages. Additional wattages can be achieved with field rewiring per instruction manual.

Dimensions and Clearances:

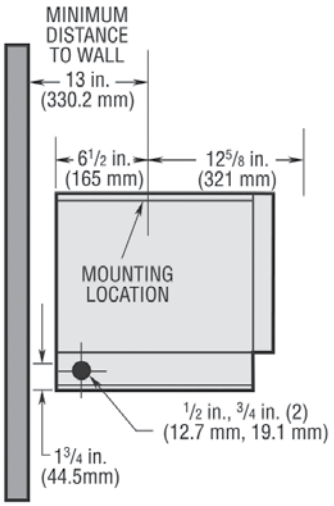

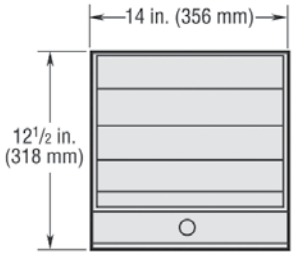

Controls and Accessories:

	CATALOG NO.	DESCRIPTION
	DS30	3-pole power disconnect switch for field installation on all heaters. Complies with "positive off" requirements.
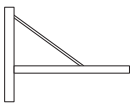	CWB1A	Wall mounting brackets for all units. (Ceiling mounting bracket is included with all heaters.)

No matter the industry or application, Marley Engineered Products has a robust portfolio of innovative, reliable, high-performance comfort heating and ventilation solutions for all your heating needs.

For more information or assistance on your next project, contact Technical Services at 800-642-4328

Scan the QR code to access additional specs and features

Approvals: _____ _____ _____