Marley
Engineered Products

INSTALLATION INSTRUCTIONS

MOUNTING BRACKET KITS CWB-1A, CWB-2A

FOR USE WITH UH UNIT HEATERS

CONTRACTOR

PLEASE READ AND FOLLOW THESE DIRECTIONS. LEAVE INSTALLATION INSTRUCTIONS FOR USER TO READ.

All unit heater mounting bracket kits are designed for either wall or ceiling mounting, and to allow heater to be pivoted for desired direction of air throw.

Mounting bracket kit consists of:
(3) Bracket arms
(1) Mounting base
(4) 1/2" x 13NC x 1" (M22 x 1,5 x 25,4 mm) Hex head bolts
(4) Lockwashers
(3) 1/2 " x 13NC (M22 x 1,5) Hex head nuts.

CAUTION

PERSONAL INJURY, FIRE OR ELECTRICAL SHOCK COULD RESULT IF HEATER FALLS. MOUNTING MEANS MUST BE ABLE TO ADEQUATELY SUPPORT THE HEATER AND ALL MOUNTING HARDWARE.

INSTALLATION (Illustration referred to bellow, are shown on back page)

1. Consult unit heater installation instructions for recommended location of heaters, and locate mounting brackets accordingly.
2. The mounting brackets will provide at least the minimum clearances of heaters from walls and ceiling, as shown in Fig. 1.
3. The mounting bracket arms may be secured to wall or ceiling before attaching them to the bracket mounting base. See Fig. 2 for dimensions of bracket arm bolt spacing.
4. Secure mounting bracket arms to wall or ceiling using at least 3/8" (9,7 mm) diameter x 2" (50,8 mm) long lag bolts for mounting to wooden structure or min. 3/8" (9,7 mm) bolts with lockwashers and nuts in beam mounted.
5. Using bolts, lockwashers and nuts provided, bolt the bracket arms to the bracket mounting base as shown in Fig. 3 or 4. (One bolt and lockwasher to be used to mount heater to bracket assembly.)

Note. On wall mounted brackets (Fig. 3), permanently attach only the two side bracket arms to the bracket mounting base, because the bolt for the centre bracket arm is also to be used to attach the unit heater to the bracket assembly.

TO ATTACH UNIT HEATER TO BRACKET ASSEMBLY

1. The assembled mounted bracket should be securely mounted to wall or ceiling before attaching the unit heater.
2. For Ceiling Mounted Heaters: Insert bolt with lockwasher through hole in bottom of bracket mounting base and tighten bolt into the threaded mounting hole provided in the top of the heater (Fig. 4).

For Wall Mounted Heaters : Insert bolt with lockwasher through the hole of the centre bracket arm, then through the hole in the bottom of the bracket mounting base, and tighten the bolt into the threaded hole provided in the top of the heater (Fig. 3). Discard the unused bolt, lockwasher and nut.

LIMITED WARRANTY

All products covered by this instruction sheet are warranted against defects in workmanship and materials for one year from date of installation, except heating elements which are warranted against defects in workmanship and materials for five years from date of installation. This warranty does not apply to damage from accident, misuse, or alteration; nor where the connected voltage is more than 5% above the nameplate voltage; nor to equipment improperly installed or wired or maintained in violation of this instruction sheet. All claims for warranty work must be accompanied by proof of the date of installation.

The customer shall be responsible for all costs incurred in the removal or reinstallation of products, including labor costs, and shipping costs incurred to return products to a Marley Electric Heating Service Center. Within the limitations of this warranty, inoperative units should be returned to the nearest Marley authorized service center or the Marley Electric Heating Service Center, and we will repair or replace, at our option, at no charge to you with return freight paid by Marley. It is agreed that such repair or replacement is the exclusive remedy available from Marley Electric Heating.

THE ABOVE WARRANTIES ARE IN LIEU OF ALL OTHER WARRANTIES EXPRESSED OR IMPLIED, AND ALL IMPLIED WARRANTIES OF MERCHANTABILITY AND FITNESS FOR A PARTICULAR PURPOSE WHICH EXCEED THE AFORESAID EXPRESSED WARRANTIES ARE HEREBY DISCLAIMED AND EXCLUDED FROM THIS AGREEMENT. MARLEY ELECTRIC HEATING SHALL NOT BE LIABLE FOR CONSEQUENTIAL DAMAGES ARISING WITH RESPECT TO THE PRODUCT, WHETHER BASED UPON NEGLIGENCE, TORT, STRICT LIABILITY, OR CONTRACT.

Some states do not allow the exclusion or limitation of incidental or consequential damages, so the above exclusion or limitation may not apply to you. This warranty gives you specific legal rights, and you may also have other rights which vary from state to state.

For the address of your nearest authorized service center, contact Marley Electric Heating, 470 Beauty Spot Road East, Bennettsville, SC 29512 (USA) (803/479-9063). Merchandise returned to the factory must be accompanied by a return authorization and service identification tag, both available from the above location. When requesting return authorization, include all catalog numbers shown on the products.

HOW TO ORDER REPAIR PARTS

In order to obtain any needed repair or replacement parts, warranty service or technical information, please contact Marley Electric Heating Service Center, 470 Beauty Spot Road East, Bennettsville SC 29512 USA. Or Call Toll-Free 1-800-642-HEAT.

Marley
Engineered Products

SPX Corporation
470 Beauty Spot Rd. East
Bennettsville, SC 29512 USA

SWO 247
10/94

5200-2240-000
Printed in U.S.A.

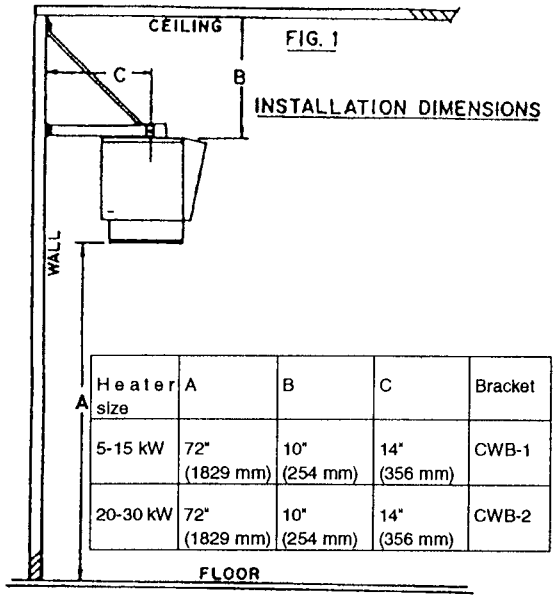

FIG. 1

INSTALLATION DIMENSIONS

Heater size	A	B	C	Bracket
5-15 kW	72" (1829 mm)	10" (254 mm)	14" (356 mm)	CWB-1
20-30 kW	72" (1829 mm)	10" (254 mm)	14" (356 mm)	CWB-2

FIG. 2

MOUNTING BRACKET DIMENSIONS

WALL MOUNTING

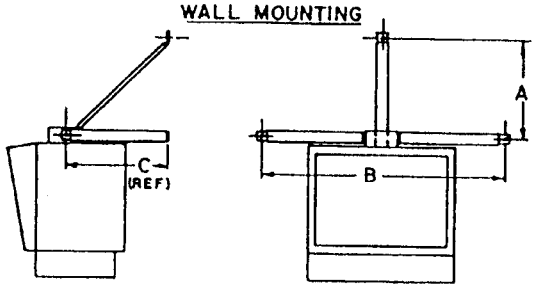

CEILING MOUNTING

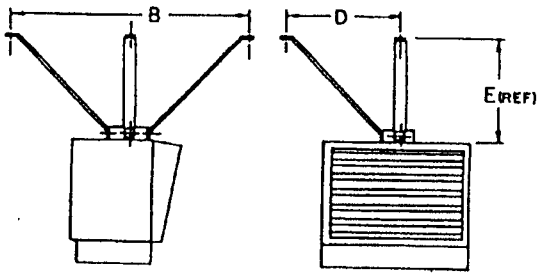

FIG. 3

MOUNTING BRACKET KIT SHOWN ASSEMBLED FOR WALL MOUNTING

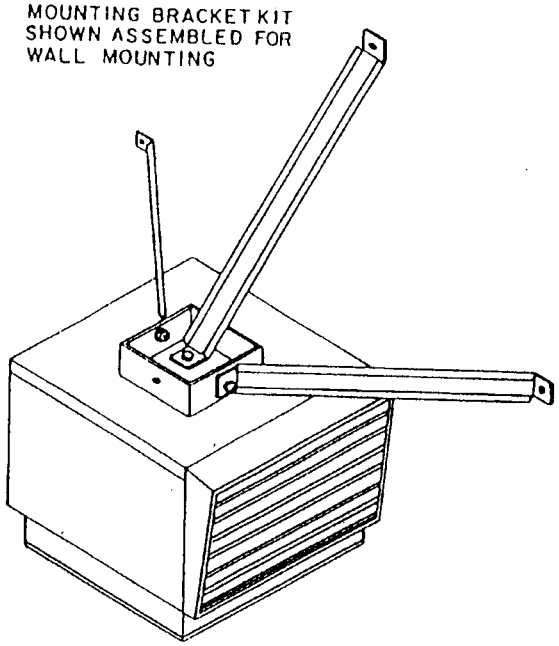

FIG. 4

MOUNTING BRACKET KIT SHOWN ASSEMBLED FOR CEILING MOUNTING

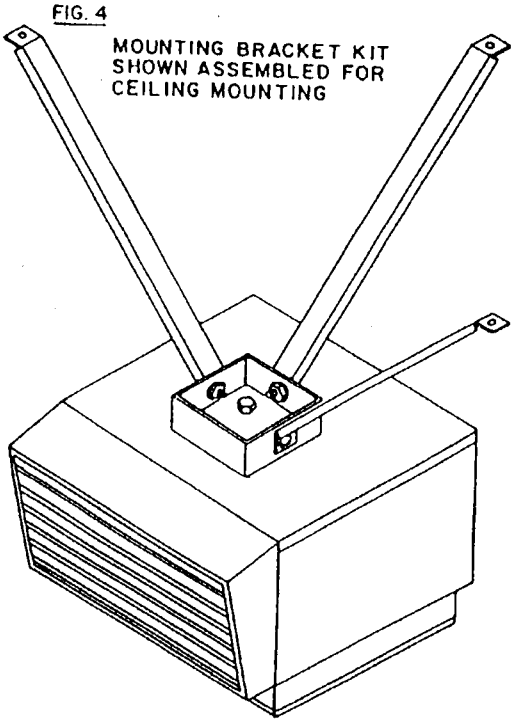

Cat No.	A	B	C	D	E
CWB-1	13" (336,6 mm)	32" (813 mm)	14" (356 mm)	16" (406 mm)	14-3/4" (375 mm)
CW_b2	19" (483 mm)	48" (1219 mm)	20" (508 mm)	24" (610 mm)	21" (533 mm)