Marley
Engineered Products

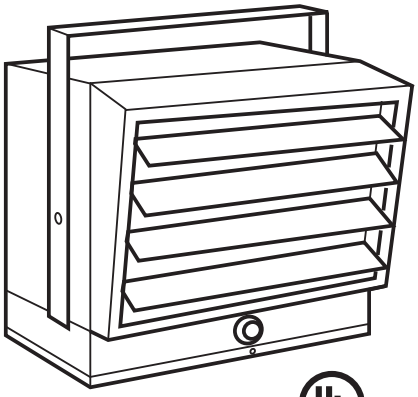

c UL us
FILE #E21609

UH Series
Electric Space Heater

Installation & Maintenance Instructions

SPECIFICATIONS: UH724ST

Heater Rating and Voltage	BTU per Hr. BTUH	Phase	Contactor Built-in	Mounting Height, ft. (mm)				Horizontal Air Throw, ft. (mm)	Min. Distance from Mounting Hole to Wall, in (mm)
				Vertical Installation		Horizontal Installation			
				Min.	Max.	Min.	Max.		
•7500 W @ 240V 6250W @ 240V 5000W @ 240V 3750W @ 240V	25,598 21,331 17,065 12,799	1	Yes	6' (1829)	11' (3353)	6' (1829)	8' (2439)	18' (5486)	••13" (330)
•5625W @ 208V 4685W @ 208V 3750W @ 208V 2812W @ 208V	19,198 15,990 12,799 9,598	1	Yes	6' (1829)	11' (3353)	6' (1829)	8' (2439)	18' (5486)	••13" (330)

• Heater is shipped from factory wired for these wattages. Heater can be field adjusted to the other wattages. Refer to “Adjusting the Heat Output” on page 4.
•• 48" (1219mm) when heater air flow is between 45° downward and vertical.

⚠ WARNING ⚠

Read Carefully - These instructions are written to help you prevent difficulties that might arise during installation of heaters. Studying the instructions first may save you considerable time and money later. Observe the following procedures, and cut your installation time to a minimum. **TO REDUCE RISK OF FIRE OR ELECTRIC SHOCK:**

1. Use minimum 60° copper wire only.
2. Heater air flow must be directed parallel to, or away from, adjacent walls.
3. Observe wall, floor, and ceiling clearance requirements.
4. All wiring must conform to national and local electrical codes and the heater must be grounded as a precaution against possible electrical shock. Heater circuit must be protected with proper fuses. See Table 1 on page 4.
5. The mounting structure and the anchoring hardware must be capable of reliably supporting the weight of the heater and, if used, the mounting bracket.
6. All electrical power must be disconnected at the main service box before installing, inspecting, cleaning or servicing the heater. This is a precaution to prevent serious electrical shock.

SAVE THESE INSTRUCTIONS

WARNING

THIS UNIT OPERATES ON 240 OR 208 VOLTS AC. IMPROPER INSTALLATION OR FAILURE TO FOLLOW THE PROCEDURES AS OUTLINED IN THIS MANUAL CAN RESULT IN SERIOUS ELECTRICAL SHOCK. DISCONNECT ALL POWER FROM THE HEATER AT THE MAIN SERVICE BOX BEFORE ATTEMPTING TO INSTALL OR SERVICE THIS UNIT.

WARNING

ALL ELECTRICAL WIRING MUST CONFORM TO LOCAL ELECTRICAL CODES. HEATER CIRCUIT MUST BE PROTECTED WITH PROPER FUSES. SEE TABLE 1 ON PAGE 4.

INTRODUCTION

Congratulations! You have just purchased one of the most versatile electric space heaters available. Your new electric unit heater has unmatched operating flexibility. It is designed to meet a variety of heating requirements by simply switching a few easily accessible wires located in the base of the unit (See output ranges in Specifications on page 1). This unique feature lets you use a single unit to meet a wide range of heating applications.

The UH heater's unique mounting system simplifies both installation and air flow control. The mounting bracket attaches to the ceiling with a single screw and allows you to turn the entire heater in a full circle. The mounting bolts on the sides of the heater permit you to adjust the air flow direction to any angle between horizontal and vertical. The louvers adjust up and down for even greater control.

These features combine to make the UH heater the most versatile space heater available anywhere for applications ranging from garages, basements, and workshops, to public buildings, service stations, stores, mini-warehouses, stockrooms, or similar applications. It can be installed easily by anyone in only a few minutes. This manual shows you how to install, operate, and maintain your UH Series electric heater.

Unpacking Your New Heater

Remove the heater from the box and inspect it for any damage. If it appears to be damaged, immediately return it to the store from which you purchased it.

Check the contents of the box to make sure it contains one heating unit and one mounting bracket.

Tools Needed

You will need the following tools to install your UH Series electric heater:

- Screwdriver
- Needle nose pliers
- Pliers
- Electric Drill and 1/4" bit
- Adjustable wrench

Hardware Needed

You will also need the following hardware for installation:

- Enough properly sized insulated copper conductor (with ground) wire to run power from the breaker/fuse to the heater. Only use copper wire rated at least 75° C. Do *not* use aluminum wire with this unit. Refer to local and national electrical codes for proper supply wire selection.
- Proper size fuses and circuit breakers in accordance with the National Electrical Code. Also see Table 1, page 4.

  Note: For certain applications, conduit may be required (see Fig. 1). Check local electrical codes. Also, if you run the wiring in conduit and wish to be able to turn the heater, be sure to purchase enough flexible conduit to allow the heater to be turned.

Fig. 1

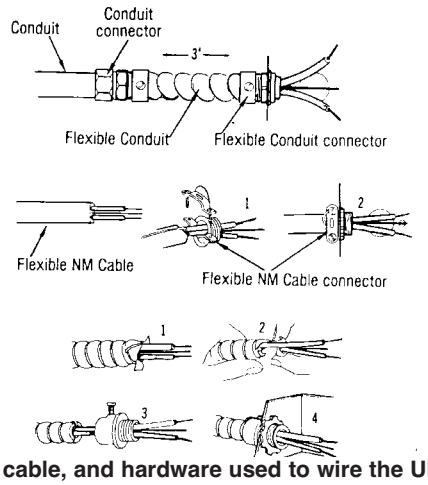

Connectors, cable, and hardware used to wire the UH Heater (Illustration may not apply to UH724ST due to supply wire sizes)

INSTALLATION

Location Of Heater

The heater should be installed out of traffic areas and at least 6' off the floor. The direction of air flow should not be restricted (ie: by columns or machinery) and the air flow should wipe exposed walls, rather than blowing directly at them. When more than one heater is used in an area, the heaters should be arranged so that the air discharge of each heater supports the air flow of the others to provide best circulation of warm air, as indicated in Figure 2.

Fig. 2

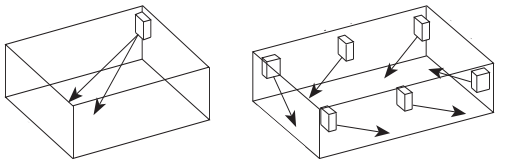

Mounting Height

When the air flow of the heater is directed vertically, the minimum mounting height is 6 feet (1829mm), the maximum mounting height is 11 feet (3353mm). When the air flow of the heater is directed horizontally the minimum mounting height is 6 feet (1829mm) and the maximum recommended height is 11 feet (3353mm).

Distance from Walls

When the heater is mounted so that the air flow direction is at an angle from horizontal to 45° downward and vertical, the distance from the mounting bracket to any wall should be at least 13 inches (330mm). When the heater is mounted so that the direction of air flow is at an angle between 45° downward and vertical, the distance from the mounting bracket to any wall should be at least 48 inches (1219mm).

1. Mounting the Bracket

Locate a stud in the ceiling and attach the mounting bracket to the ceiling joist as shown in figures 3-A or 3-B. You will need to remove the mounting bracket from the heating unit by loosening the bracket screws with a wrench and slipping the handle off over the screw heads. Remember to place a washer on the screws before you insert them through the holes in the mounting bracket and screw them into the stud. Tighten the screws enough to securely hold the heating unit with the air flow pointed in the proper direction.

Fig. 3-A

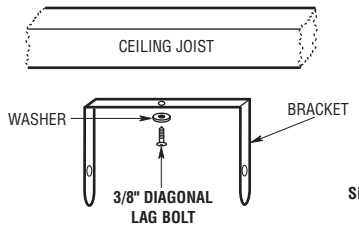

Single-Screw Mounting
(Ill.1)

Fig. 3-B

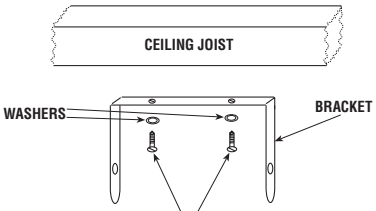

Double-Screw Mounting
(Ill.2)

2. Hanging the Heater

Attach the heating unit to the mounting bracket. Lift the heater up and into the mounting bracket. The bracket screws, located on each side of the heating unit, allow the heater to be attached easily to the mounting bracket by aligning the screws with the keyhole slots in the mounting brackets. If the heater is to be tilted, it must be positioned in the lower keyhole slots (see Fig. 4). Tighten the bracket screws with a wrench so the unit is securely suspended at the desired horizontal or vertical angle.

3. Connecting the Power

To connect the power to the heater, simply remove the screw from the front of the unit. This allows the hinged bottom to open, providing access to the electrical wiring and connectors. (See Fig. 4) Attach the cable connectors to the unit (See Fig. 1, pg 2) and slide

Fig. 4

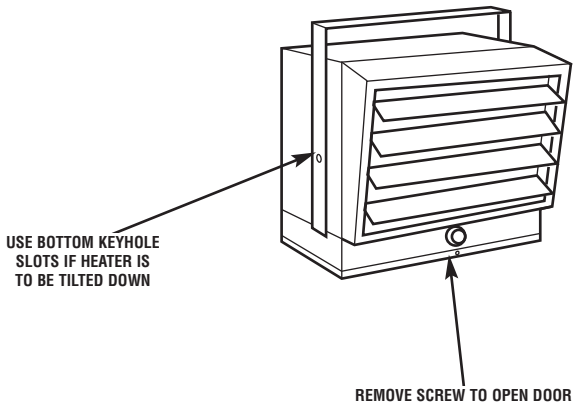

the correctly sized wire through the cable connector. Pull enough of the wire through the connector so you will have enough wire to work with when you make the connections.

Connect the wire to the power terminal block located in the base of the heater (See Fig. 5).

Fig. 5

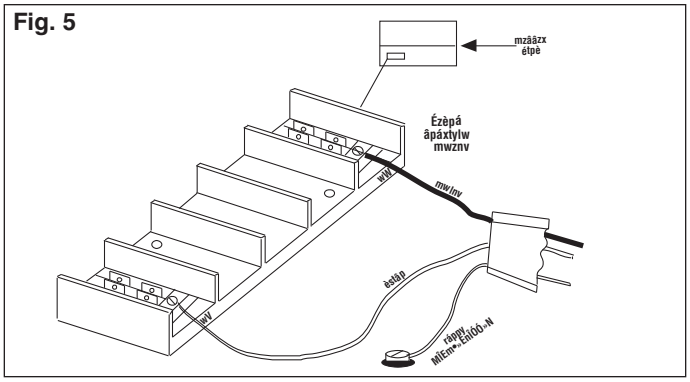

NOTE: TO DECREASE THE HEAT OUTPUT OF THE HEATING UNIT, SEE TABLE 1 AND SCHEMATIC DIAGRAMS ON PAGE 4.

Turn on the power at the main service.

OPERATION

Setting the Thermostat

Rotate thermostat knob clockwise to high position. After room reaches desired comfort level, rotate thermostat knob counterclockwise until the thermostat clicks off. (Note that the fan delay will keep the fan running until the elements cool.) Heater will cycle on and off to maintain room temperature.

NOTE: THE FIRST TIME YOU OPERATE THE UNIT, IT MAY SMOKE SLIGHTLY. THIS IS DUE TO THE RESIDUAL CLEANING AGENTS USED TO CLEAN THE ELEMENT WHEN THE HEATER IS MANUFACTURED. THIS IS NORMAL AND DOES NOT INDICATE A PROBLEM WITH THE UNIT. THIS CONDITION WILL STOP AFTER THE HEATER HAS BEEN IN OPERATION FOR A FEW MINUTES.

Automatic Fan Delay: The UH heater has an automatic fan delay. When the thermostat calls for heat, fan action is delayed momentarily until the heating elements warm. This prevents the circulation of cold air. When the heater raises the temperature of the room to the thermostat set point, the heating element is turned off but the fan will continue to run until the heating element cools down. This prevents exposing the unit to residual heat, provides a higher comfort level and prolonged element life.

Thermal Cutout: The UH heater is also equipped with a thermal cutout which will automatically shut off the heater in the event of overheating. The heater will turn on when the operating temperature returns to normal. Should the unit overheat and activate the thermal cutout cycle, the cause of the overheating should be determined before further operation.

NOTE: If the unit is installed in an area where the temperature is below 50° F, the fan may cycle on and off until the temperature in the room rises above 50° F. This is normal and does not indicate a problem with the unit. As soon as the heater warms the air in the room above 50°, the unit will cycle normally.

ADJUSTING AIR FLOW DIRECTION

You can adjust the direction of air flow by:

A. Turning the unit. If the unit has been installed with a single lag bolt, as shown in Figure 6, simply turn the entire unit as needed to adjust air flow.

B. Tilting the unit. Loosen the bracket screws, tilt

Fig. 6

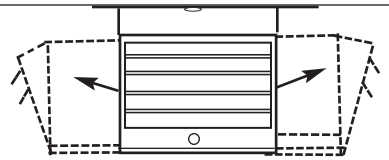

the heater to the desired position, and re-tighten the bracket screws (see Figure 4).
NOTE: To tilt the heater it must be mounted in bottom keyhole slots of mounting bracket to maintain adequate clearance and prevent possible overheating.

C. Adjusting the louvers to the desired position.
NOTE: The louvers are designed so they can not be completely closed. Do not attempt to defeat this feature, damage to the unit can result.

ADJUSTING HEAT OUTPUT

Heat output can be increased or decreased by switching wires at the wattage change terminal board. The heater is factory wired to deliver the maximum heat output for the model used. Should your particular application require less heat output, refer to Table 1 and change the wires at the wattage change terminal board as shown in Wiring Diagram Fig. 7.

WARNING

TO PREVENT POSSIBLE ELECTRIC SHOCK, DISCONNECT POWER TO THE HEATER AT THE MAIN SERVICE BOX BEFORE ATTEMPTING TO ADJUST THE HEAT OUTPUT OF THIS UNIT.

TABLE 1. HEAT OUTPUT ADJUSTMENTS

BTU/HR	VOLTS	WATTS	MAX FUSE SIZE	HEATER AMPS	MOVE JUMPERS FROM C-D TO A-B
25,598	240	7500	45	31.3	NONE
21,331	240	6250	35	26.1	BLUE
17,065	240	5000	30	20.9	BLUE & YELLOW
12,799	240	3750	20	15.7	BLUE, YELLOW & RED
19,198	208	5625	40	27.1	NONE
15,990	208	4685	30	22.3	BLUE
12,799	208	3750	25	18.1	BLUE & YELLOW
9,598	208	2812	20	13.6	BLUE, YELLOW & RED

Fig. 7

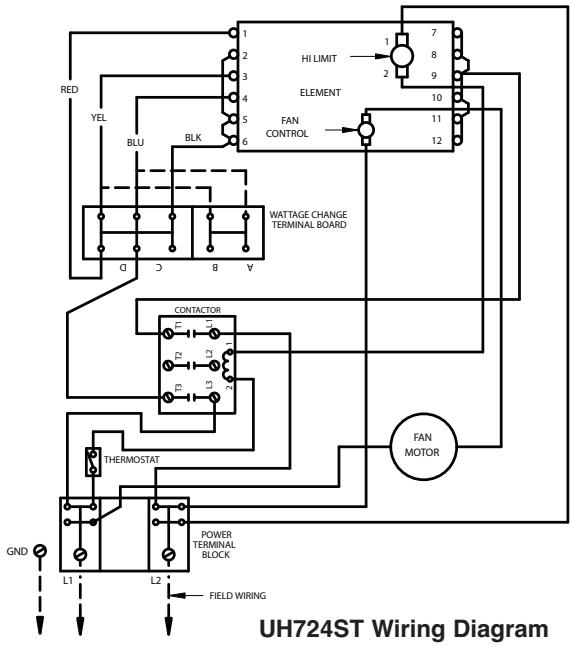

UH724ST Wiring Diagram

MAINTENANCE

Because of its rugged design, superior engineering, and high-quality craftsmanship, the UH heater requires little maintenance. With proper care, your electric heater should last a lifetime, but seasonal cleaning is recommended to maintain the efficiency of the heater.

Cleaning the Heating Element

To clean the heating element, loosen (but do not remove) the four Phillips head screws located behind the louvers in the corners of the louver housing (See Fig. 8, page 5).

WARNING

USE CARE TO PREVENT DAMAGE TO INTERNAL HEATER WIRING WHEN CLEANING ELEMENT. MAKE SURE ALL CONNECTIONS REMAIN TIGHT AND ALL WIRING IS ROUTED AWAY FROM ELEMENT FINS WHEN REASSEMBLING THE UNIT. ALLOWING WIRING TO TOUCH THE ELEMENT FINS COULD RESULT IN A FIRE HAZARD.

Fig. 8

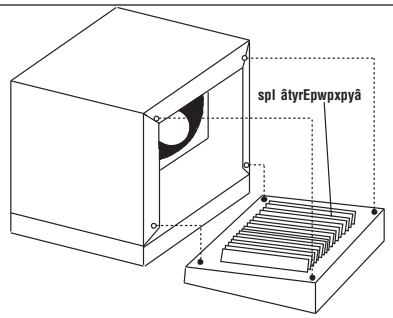

Heating Element Bezel Assembly & Louver Housing

Grasp the louver housing on both sides, lift up, and pull out. This provides access to the heating element.

Note: Element, limit and fan delay wiring are attached. When removing Bezel Assembly, do so carefully as not to pull wiring loose.

Remove dust or lint with a soft brush or a vacuum cleaner. Replace the louver housing and tighten the Phillips head screws.

Fig. 9

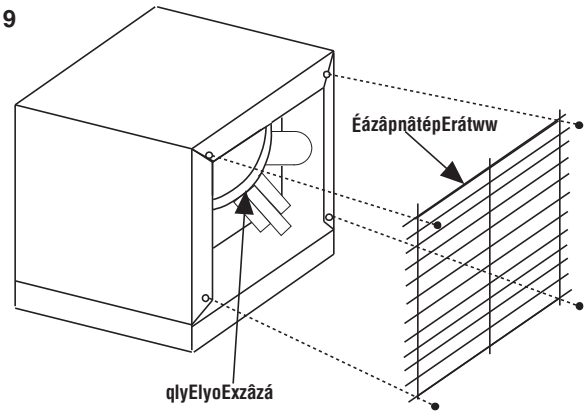

Cleaning the Fan and Motor

Remove the protective grille from the rear of the heater. This provides access to the fan and motor. Wipe off the fan and motor with a soft cloth or brush. The fan motor does not require lubrication. Replace protective grille (See Fig. 9).

TABLE 2.
REPLACEMENT PARTS FOR UH SERIES ELECTRIC HEATERS

KEY NO.	DESCRIPTION	PART NUMBER	QUANTITY UH724
1	Element	302006810	1
2	Motor	3900-2008-000	1
3	Fan Control Assembly	410148000	1
4	High Temp. Limit Control	410027000	1
5	Thermostat	5813-2050-000	1
6	Thermostat Knob	3301-2014-006	1
7	Motor Mount	1215-2235-003	1
8	Fan Blade	1210-2017-000	1
9	Ceiling Bracket (Handle)	310876001	1
10	Wire Guard	312056802	1
11	Louver	3503-2004-010	4
12	Bezel Assembly	200162902	1
13	Cover (Access Door)	310104902	1
14	Bracket Screw	400029008	2
15	Cover Wrap Assembly	200193902	1
16	Control Box Assembly	200161902	1
17	Power Terminal Block	5823-0004-005	1
18	Wattage Change Board	5823-0003-001	1
19	Power Relay	5018-0004-102	1

UH SERIES REPLACEMENT PARTS

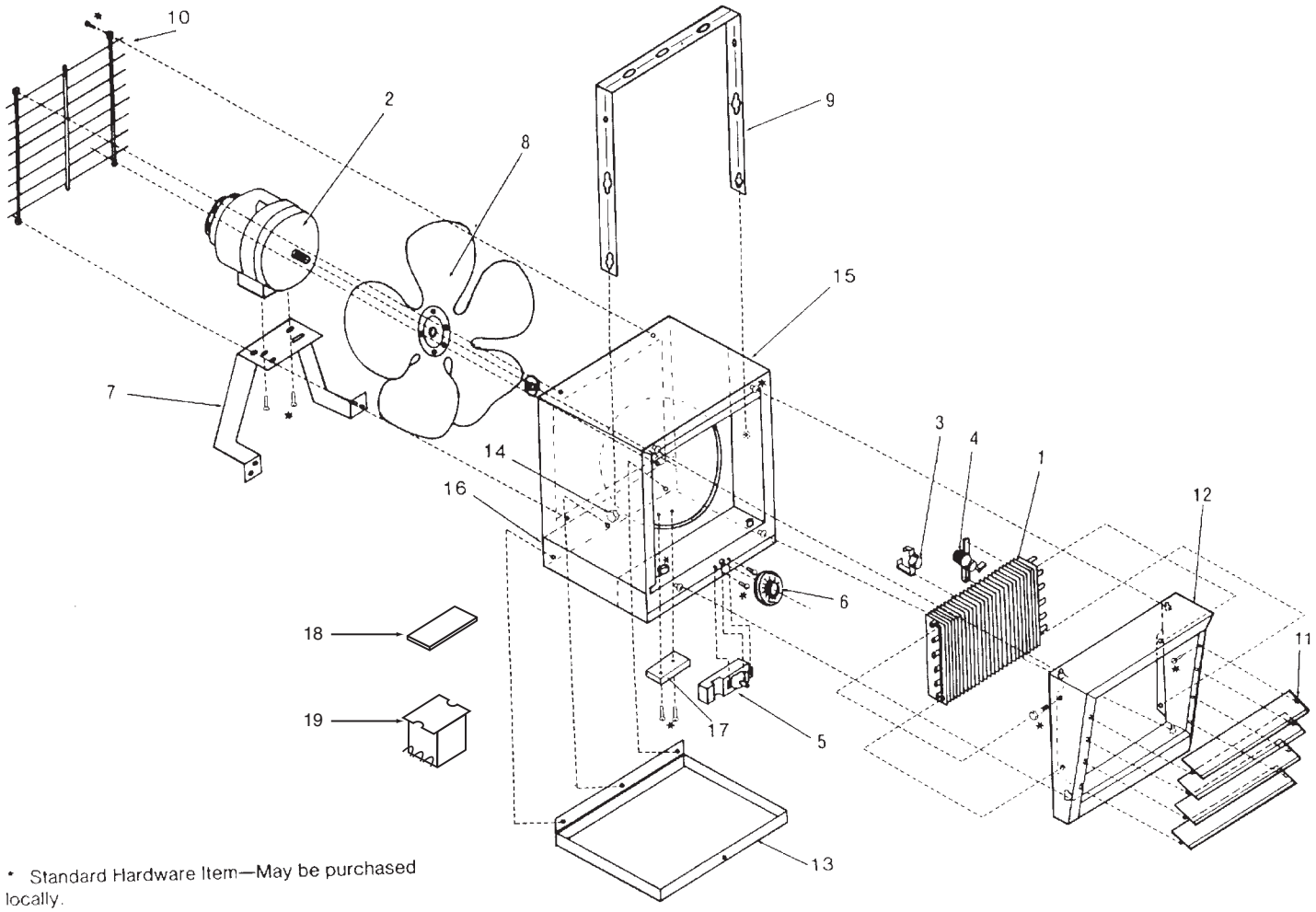

* Standard Hardware Item—May be purchased locally.

LIMITED WARRANTY

All products manufactured by Marley Engineered Products are warranted against defects in workmanship and materials for one year from date of installation, except heating elements which are warranted against defects in workmanship and materials for ten years from date of installation. This warranty does not apply to damage from accident, misuse, or alteration; nor where the connected voltage is more than 5% above the nameplate voltage; nor to equipment improperly installed or wired or maintained in violation of the product's installation instructions. All claims for warranty work must be accompanied by proof of the date of installation.

The customer shall be responsible for all costs incurred in the removal or reinstallation of products, including labor costs, and shipping costs incurred to return products to Marley Engineered Products Service Center.Within the limitations of this warranty, inoperative units should be returned to the nearest Marley authorized service center or the Marley Engineered Products Service Center, and we will repair or replace, at our option, at no charge to you with return freight paid by Marley. It is agreed that such repair or replacement is the exclusive remedy available from Marley Engineered Products.

THE ABOVE WARRANTIES ARE IN LIEU OF ALL OTHER WARRANTIES EXPRESSED OR IMPLIED. AND ALL IMPLIED WARRANTIES OF MERCHANTABILITY AND FITNESS FOR A PARTICULAR PURPOSE WHICH EXCEED THE AFORESAID EXPRESSED WARRANTIES ARE HEREBY DISCLAIMED AND EXCLUDED FROM THIS AGREEMENT. MARLEY ENGINEERED PRODUCTS SHALL NOT BE LIABLE FOR CONSEQUENTIAL DAMAGES ARISING WITH RESPECT TO THE PRODUCT, WHETHER BASED UPON NEGLIGENCE, TORT, STRICT LIABILITY, OR CONTRACT.

Some states do not allow the exclusion or limitation of incidental or consequential damages, so the above exclusion or limitation may not apply to you. This warranty gives you specific legal rights, and you may also have other rights which vary from state to state.

For the address of your nearest authorized service center, contact Marley Engineered Products in Bennettsville, SC, at 1-800-642-4328. Merchandise returned to the factory must be accompanied by a return authorization and service identification tag, both available from Marley Engineered Products. When requesting return authorization, include all catalog numbers shown on the products.

HOW TO OBTAIN WARRANTY SERVICE AND WARRANTY PARTS PLUS GENERAL INFORMATION

1. Warranty Service or Parts **1-800-642-4328**
2. Purchase Replacement Parts **1-800-654-3545**
3. General Product Information **www.marleymep.com**

Note: When obtaining service always have the following:
1. Model number of the product
2. Date of manufacture
3. Part number or description

Marley Engineered Products

470 Beauty Spot Rd. East
Bennettsville, SC 29512 USA

5200-2797-001

ECR 38550
02/10