Marley
Engineered Products

HOSS Series (Rev B)
Smart Series
Large Wall Heater

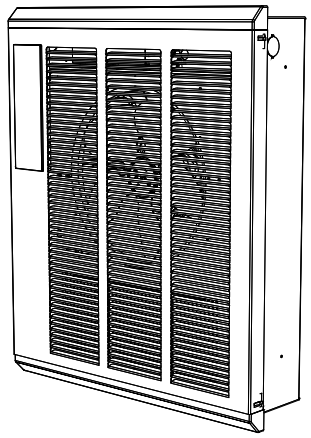

Installation, Operation & Maintenance Instructions

READ CAREFULLY - This manual provides instructions for the correct installation, safe use, and care of this product. Special attention should be directed to the warnings provided below which identify certain precautions and special instructions for safe and efficient installation and use. Studying these instructions first may save you considerable time and money later and keep your installation time to a minimum. If you are not familiar with electricity or feel uncomfortable in working with electricity, refer the installation of this product to a licensed electrician or qualified person.

Table 1. Specifications

MODEL	VOLTS	PHASE	WATTS	AMPS	MIN. SUPPLY WIRE GAUGE
HOSS4008	208	1	1800-4000	19.2	10
HOSS4004	240	1	1800-4000	16.7	10
HOSS4007	277	1	1800-4000	14.4	12

IMPORTANT INSTRUCTIONS

WARNING

WHEN USING ELECTRIC APPLIANCES, BASIC PRECAUTIONS SHOULD ALWAYS BE FOLLOWED TO REDUCE THE RISK OF FIRE, ELECTRIC SHOCK, AND INJURY TO PERSONS, INCLUDING THE FOLLOWING:

1. Read all instructions before installing or using this heater.
2. This heater is hot when in use. To avoid burns, do not let bare skin touch hot surfaces. Keep combustible materials, such as furniture, pillows, bedding, papers, clothes, curtains, etc. at least 3 feet (0.9 m) from the front of the heater.
3. Extreme caution is necessary when any heater is used by or near children or invalids and whenever the heater is left operating and unattended.
4. Do not operate any heater after it malfunctions. Disconnect power at service panel and have heater inspected by a qualified electrician before using.
5. Do not use outdoors.
6. To disconnect heater, turn controls to OFF, and turn OFF power to heater circuit at main disconnect panel.
7. Do not insert or allow foreign objects to enter any ventilation or exhaust opening as this may cause an electric shock, fire, or damage to the heater.
8. To prevent a possible fire, do not block air intake or exhaust in any manner.
9. A heater has hot and arcing or sparking parts inside. Do not use it in areas where gasoline, paint, or flammable liquids are used or stored.
10. Use this heater only as described in this manual. Any other use not recommended by the manufacturer may cause fire, electric shock, or injury to persons.
11. This heater is provided with a red alarm light that will illuminate ONLY if the heater has turned off as a result of overheating. If you see the light on, immediately turn the heater OFF and inspect for any objects on or adjacent to the heater that may have blocked the airflow or otherwise caused high temperatures to have occurred. **DO NOT OPERATE THE HEATER WITH THE ALARM LIGHT ILLUMINATING.**
12. This heater is intended for comfort heating applications and not intended for use in special environments. Do not use in damp or wet locations such as marine or greenhouse or in areas where corrosive or chemical agents are present.
13. When installing, see INSTALLATION INSTRUCTIONS for additional warnings and precautions.
14. For safe and efficient operation, and to extend the life of your heater, keep your heater clean - See MAINTENANCE INSTRUCTIONS.

SAVE THESE INSTRUCTIONS

INSTALLATION INSTRUCTIONS

⚠ WARNING ⚠

To prevent a possible fire, injury to persons or damage to the heater, adhere to the following:

1. Disconnect all power coming to heater at main service panel before wiring or servicing.
2. All wiring procedures and connections must be in accordance with the National and Local Codes having jurisdiction and the heater must be grounded.
3. Verify the power supply voltage coming to heater matches the ratings as shown on the heater nameplate.

CAUTION: ENERGIZING HEATER AT A VOLTAGE GREATER THAN THE VOLTAGE PRINTED ON THE NAMEPLATE WILL DAMAGE THE HEATER AND VOID THE WARRANTY AND COULD CAUSE A FIRE.

4. **CAUTION** - High temperature, risk of fire, keep electrical cords, drapery, furnishings, and other combustibles at least 3 feet (0.9 m) from front of heater. Do not install heater behind doors, below towel racks, or in an area where it is subject to being blocked by furniture, curtains or storage materials. Hot air from the heater may damage certain fabrics and plastics.
5. To reduce the risk of fire, do not store or use gasoline or other flammable vapors and liquids in the vicinity of the heater.
6. For wall mounting only with air discharge downward. Do NOT install in floor, ceiling, upside down (air discharge upward), or sideways.
7. The following minimum clearances must be maintained:

   Bottom of heater to floor - 12” (305 mm).

   Sides of heater to adjacent wall - 12” (305 mm).

   Top of heater to ceiling - 36” (915 mm).
8. Do not operate the heater without the grille installed.
9. Do not use this heater for dry out as the paint, plaster, sawdust and drywall sanding dust will permanently damage the heater and must be kept out of the heater.

The heater is designed for recessed installation in 2” x 4” (50 mm x 101 mm) studs or larger wall sections using the back box provided. The heater may be wired with standard building wire (60°C). Refer to “Specifications” and heater nameplate for correct supply voltage and wire size.

NOTE: The optimum mounting height for this heater is 18” to 24” (450 mm to 600 mm) from floor to bottom of back box. DO NOT install closer than 12” (305 mm) from the floor.

Installation of Back Box in New Construction

⚠ WARNING ⚠

TO PREVENT HAZARD OF FIRE OR ELECTRICAL SHOCK, DO NOT INSTALL WITHOUT BACK BOX.

CAUTION ⚠

TO PREVENT POSSIBLE DAMAGE TO POWER WIRING, USE ONLY THE KNOCKOUTS PROVIDED IN BACK BOX WITH LISTED CABLE CLAMP OR BUSHING.

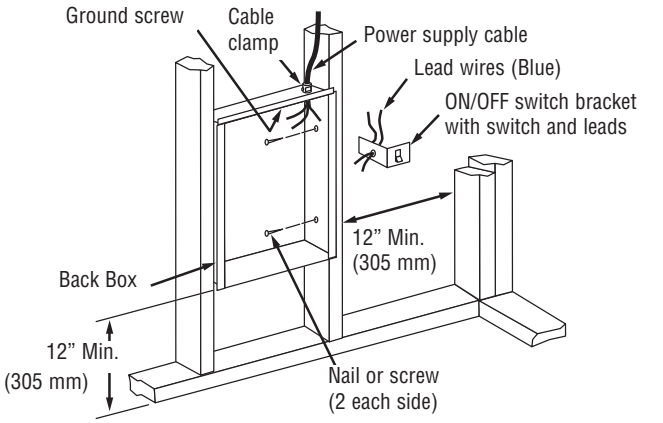

Figure 1 - Locating Back Box in New Construction

NOTE: If the finished wall surface is already up, follow instructions for “Installation of Back Box in Existing Construction”.

1. Place the back box between two 16" (406 mm) center-to-center wall studs at the desired mounting height but no closer than 12" (305 mm) to adjacent wall or floor.

NOTE: If wall studs are spaced greater than 16” on center, additional framing supports may be necessary.

2. Align back box such that the bottom and sides will be flush with finished wall surface (top flange of back box should protrude approximately 1/2" (13 mm) from finished wall surface (You must know the thickness of the finished wall when installing).
3. Secure the back box in position with wood screws or nails as shown in Figure 1.
4. Run a power supply cable into the knockout area in the upper right hand corner of the back box (see Figure 1). All wiring must be in accordance with National and Local Electrical Codes. Refer to Specifications for correct wire size.
5. Remove ON/OFF switch bracket by loosening two screws on the right side.
6. Install a cable clamp in the knockout in the top of the back box.
7. Insert power supply cable through cable clamp, allowing at least 6" (152 mm) of leads to extend inside the back box. Connect the blue lead wires of ON/OFF switch to the supply wire leads using wire connectors (see Figure 3, Wiring Diagram).

NOTE: If power supply is provided by standard non-metallic sheathed cable (Romex) and the supply voltage is 240 or 208 volts (two power wires), the white wire color must be changed using black electrical tape to comply with the NEC. White is only allowed for a Neutral conductor.

8. Connect building ground conductor to the back box using the green screw located in the inside top of the back box.
9. Secure ON/OFF switch bracket in place by tightening screws.

Installation of Back Box in Existing Construction

1. Provide a wall opening 14-1/2" (362 mm) wide by 18-1/2" (470 mm) high at the desired mounting height, but no closer than 12" (305 mm) from floor or adjacent wall. (See Figure 2.) Locate so at least one side of opening is at wall stud.
2. Run a power supply cable into the knockout area in the upper right hand corner of the wall opening (see Figure 2). All wiring must be in accordance with National and Local Electrical Codes. Refer to Specifications for correct wire size.
3. Remove ON/OFF switch bracket by loosening two screws on the right side.
4. Install a cable clamp in the knockout in the top of the back box.
5. Insert power supply cable through cable clamp, allowing at least 6" (152 mm) of leads to extend inside the back box. Connect the blue lead wires of ON/OFF switch to the supply wire leads using wire connectors (see Figure 3, Wiring Diagram).

NOTE: If power supply is provided by standard non-metallic sheathed cable (Romex) and the supply voltage is 240 or 208 volts (two power wires), the white wire color must be changed using black electrical tape to comply with the NEC. White is only allowed for a Neutral conductor.

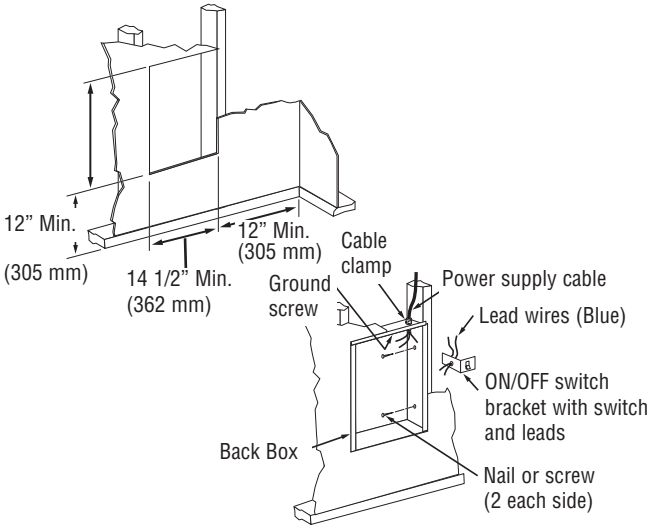

Figure 2 - Locating Back Box in Existing Construction

6. Connect building ground conductor to the back box using the green screw located in the inside top of the back box.
7. Secure ON/OFF switch bracket in place by tightening screws.
8. Insert back box in wall opening being careful not to damage the supply wiring. Secure the back box in place with wood screws or nails.

Installation of Heater Assembly

Carefully position the heater assembly, with fan on top, and element on bottom into the back box (see Figure 4).

NOTE: The heater assembly must be carefully positioned to ensure the wires and wire connector are not trapped between the heater assembly and the back box.

Once the heater assembly is positioned correctly in the back box, fasten securely using the four screws provided, one in each corner (see Figure 4).

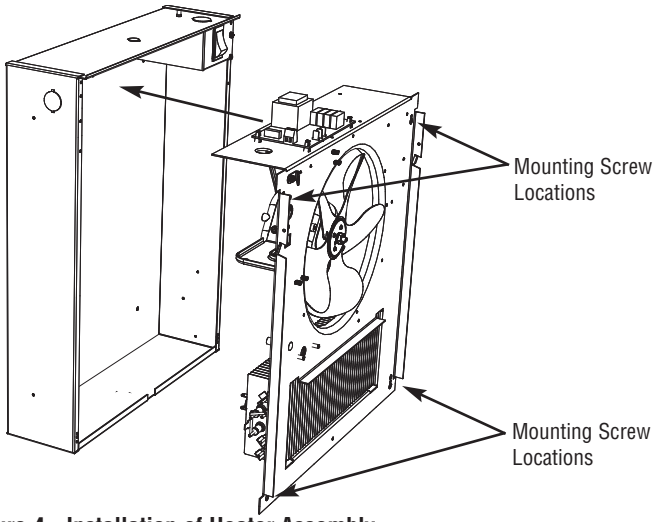

Figure 4 - Installation of Heater Assembly

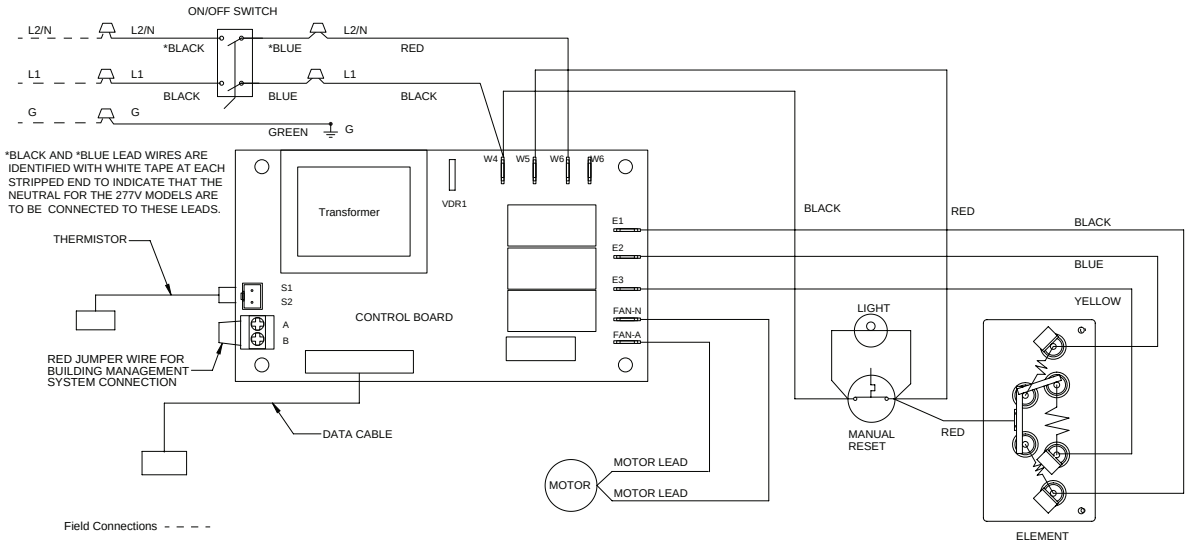

Figure 3 - Wiring Diagram

Wiring of Heater

Refer to Wiring Diagram, Figure 4

⚠ WARNING ⚠

POWER SUPPLY VOLTAGE MUST BE THE SAME AS HEATER VOLTAGE RATING SHOWN ON HEATER NAMEPLATE. CONNECTING TO A VOLTAGE IN EXCESS OF NAMEPLATE RATING WILL DAMAGE HEATER AND VOID WARRANTY. ALL CONNECTIONS MUST BE MADE WITH APPROPRIATELY SIZED LISTED WIRE CONNECTORS.

1. Connect the black (L1) heater pigtail from ON/OFF switch to the black power lead on the heater assembly.
2. Connect the red (L2) heater pigtail to the other black power lead.

NOTE: L2/N heater pigtail is white for 277 volt model and must be connected (through ON/OFF Switch) to a white Neutral supply lead.

3. If not already done, connect building ground conductor to green ground screw in heater back box.

Building Management Systems (BMS)

To utilize the BMS capabilities of this unit, remove the red jumper wire between terminals A and B on the control terminal board (see figure 3, wiring diagram). Connect two wires from a dry contact (no voltage) in the BMS system to terminals A and B.

NOTE: DO NOT REMOVE THE RED JUMPER UNLESS CONTROL BY A BUILDING MANAGEMENT SYSTEM IS BEING USED.

When BMS takes control, heater functions will not work, the touch screen is locked, BMS light on the heater touchscreen blinks.

When BMS releases control, heater functions are available, heater resumes operating at previously programmed settings. Refer to Operations Manual for programming options and details.

Installation of Grille and Control Wire Connector

1. Push ON/OFF switch into ON position.
2. Install (2) plastic covers on back box as follows: (See Figure 5)

NOTE: Both top and bottom plastic covers are identical.

- TOP - Align the screw bosses on the back of the plastic cover with the second hole down from the top of the back box and attach it with the two screws provided.
- BOTTOM - Align the screw bosses on the back of the second plastic cover with holes at the bottom of the back box that are just above the fan deck mounting screws and attach it with two screws provided.

3. Position the grille in front of the heater assembly, extend the control wire connector from the heater assembly to the matching connector from the back of the electronic control, behind the grille. The connector is keyed so it will fit only one way.

NOTE: Press the connector gently and firmly, but do not force, making sure the clip on the connector engages.

4. Install the front cover by hooking the (2) tabs on top and bottom plastic covers on one side then rotating the front cover into place making sure that all four tabs are snapped into the grille.

NOTE: Use caution when installing the grille to avoid trapping the control wire in between the grille and heater assembly.

OPERATION INSTRUCTIONS

Initial Setup Instructions (Performed by Installer)

NOTE: After installation, the installer should perform the following procedures to ensure proper operation of the heater. See “Customizing Heater Settings” for details on programming other functions of the heater.

1. Switch the power on at the main circuit panel. When the heater is first powered up the buzzer beeps for one second and displays all indicators in high luminance and the POWER button in half blue luminance for 3 seconds, then the unit will turn OFF. When OFF, only the POWER button illuminates in orange color in half luminance and all other buttons and icons will be OFF. When OFF, if the POWER button is touched, all 4 buttons will illuminate indicating the heater is ON and the control panel is powered up. See Figure 6 for Control Panel layout details.

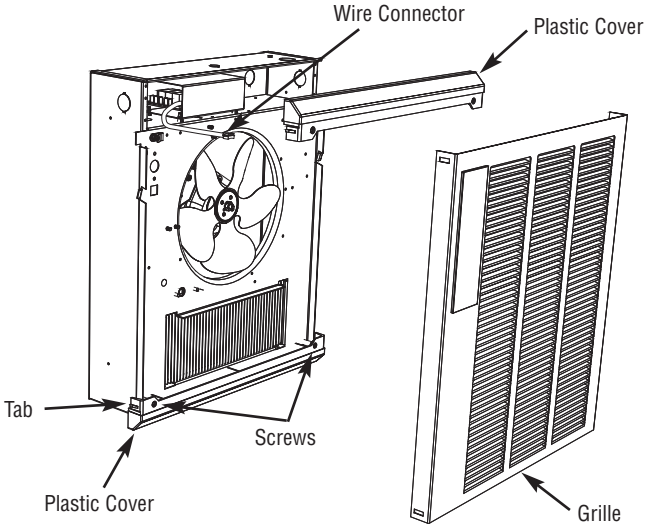

Figure 5 - Installation of Grille Assembly

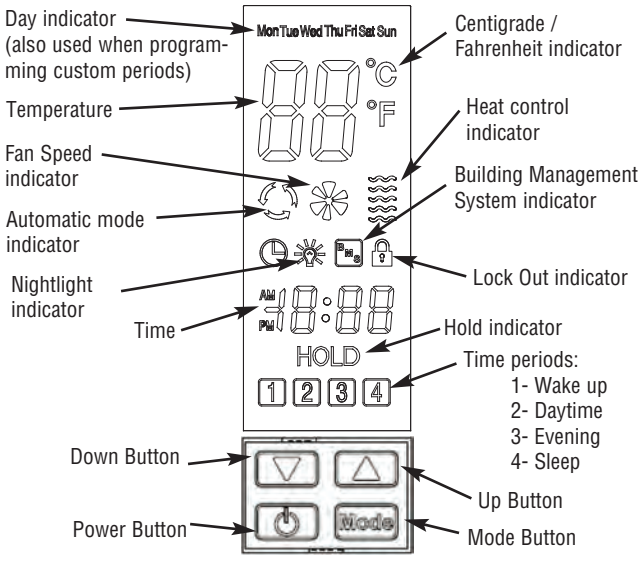

Figure 6 - Control Panel

2. Set Day and Time:

NOTE: For the following setup procedures, the display will automatically save the setting after a 30 second pause and return to the previous operating setting. If this occurs, start back at Step a of the Set Day and Time procedure.

a. Simultaneously touch and hold the UP button and DOWN button for 1.5 seconds. A beep will sound and the Day indicator at the top of the display will flash (the buttons on the display respond to touch, not pressure).

NOTE: If user touches the POWER button at any point during setup procedure, the display will automatically save settings and return to the previous operating setting.

b. Using the UP or DOWN buttons, adjust to appropriate DAY of week.

c. Touch the MODE button. AM / PM indicator will flash. Use the UP and DOWN buttons to set appropriate time. AM / PM will change automatically once you pass 12:00.

d. Touch the MODE button, MINUTES will flash. Use the UP and DOWN buttons to set MINUTES to the appropriate time.

e. After the last parameter is set, touch the MODE button to lock in your settings.

3. Once the installer has performed the initial setup, power down the unit by touching the POWER button if no other programming will be done at this time.

NOTE: The unit is programmed with default time and temperature settings for the Automatic Mode (see below). If these settings are satisfactory, then skip "Programming the Thermostat for Automatic Mode" and continue to the other programmable options under "Customizing Heater Settings."

Default settings for Automatic Mode:

Period	Time	Setpoint
1. Wake Up	6:00 AM	70°F (21°C)
2. Daytime	8: 00 AM	62°F (17°C)
3. Evening	6:00 PM	70°F (21°C)
4. Sleep Time	10:00 PM	62°F (17°C)

Customizing Heater Settings

The heater has three modes of operation, Automatic (Heat) Mode, Ventilation Mode, and Hold Mode with five user programmable options, 7 Day Programmable Thermostat, Lockout Setting, Volume Adjustment, Centigrade/Fahrenheit, and a Nightlight.

NOTE: For the following setup procedures, the display will automatically save the setting after a 30 second pause and return to the previous operating setting. If this occurs, start back at Step 1 of the procedure.

Programming the Thermostat for Automatic Mode

The 7 day programmable thermostat can be customized for two categories, Weekdays (Monday-Friday) and Weekends (Saturday & Sunday). Each category has 4 periods, see the Default settings above for an example. Set a start time and temperature for each period:

1. Simultaneously touch and hold the POWER and MODE buttons for 1.5 seconds. MON through FRI will display with the hour and Period 1. This is your wake-up time.
2. Touch MODE button once to start programming the HOUR for Period 1 (Monday through Friday). Touch either the UP or Down buttons to set the hour for START time.
3. Touch MODE button again to program the MINUTES for Period 1. Touch the UP or DOWN buttons to set MINUTES.
4. Touch MODE button again to start programming the TEMPERATURE for Period 1 (Wake Up). Touch the UP or Down buttons to set temperature for Wake Up.
5. Touch the MODE button again to move to Period 2 and follow steps 2 through 4 for each of the remaining periods. Once the Weekdays (Monday through Friday) are set, touching the MODE button again will move to the Weekend settings. Follow steps 2 through 4 again for the weekend settings.
6. Once the previous steps are complete, touch the MODE button once more to lock the settings or wait 30 seconds and the unit will lock the settings automatically. Once the settings have been locked the unit will begin normal operation.

Hold Mode (Vacation Setting)

The HOLD mode overrides the programmed settings and is useful when a constant temperature needs to be maintained for comfort or can be set at a lower temperature for times when the area is unoccupied for long periods (vacation setting) or if freeze protection is needed in colder climates.

1. Touch MODE button once to activate the display and touch the MODE button again until the HOLD indicator appears.
2. Touch the Up or Down buttons to set temperature to your "Hold" temperature. During HOLD mode, default settings along with the automatic rotation of the 4 periods will be disabled. The heater will operate from the current setting, where the setpoint can be adjusted.
3. To exit out of the HOLD mode, the user has to press the MODE button.

NOTE: HOLD mode setting will not be saved after exiting.

Ventillation Mode

This heater also has the option to use as a FAN ONLY device. Heat will not be produced, but the ventilator fan will operate to provide a nice gentle breeze to circulate the air.

Touch the MODE button until you see the FAN icon illuminate and flash. Use the Up or Down buttons to increase or decrease the fan speed.

NOTE: The fan icon will flash for 3 seconds. After 3 seconds, the heater will enter Fan Only Operation. Touching the MODE button again will switch the heater into another operation.

Celsius / Fahrenheit Indication

The default temperature scale for the heating unit is Fahrenheit. To change the temperature scale, simultaneously touch and hold the MODE and DOWN buttons for 1.5 seconds. Notice the **C** indicator illuminates. Touch both buttons again to change back to the **F** (Fahrenheit) scale.

Lock Out Feature

Touch and hold the POWER and DOWN buttons simultaneously for 1.5 seconds. Notice that the Padlock symbol will be visible. Touch and hold both buttons again to toggle Padlock symbol ON or Padlock symbol OFF.

NOTE: With the Padlock symbol ON, the unit is locked (the POWER button is functional, the normal functions of the other buttons are disabled).

Night Light Operation

Touch and hold MODE and UP Buttons simultaneously for 1.5 seconds. Notice that the NIGHT LIGHT (Light bulb) indicator will be visible and the backlight will illuminate at 100% brightness. Touch both buttons again and the NIGHT LIGHT indicator and backlight will turn OFF.

Beep Volume Control

There are three settings for the audible beep, 2=HIGH , 1=LOW, 0=OFF. To adjust the audible beep, follow these instructions.

1. Make sure the display is OFF.
2. Simultaneously touch the POWER and MODE buttons until either a 2, 1 or 0 is displayed.
3. Press the Up or Down Buttons to make a selection between 2 (HIGH), 1 (LOW) or 0 (OFF).
4. After the desired volume is set, touch the POWER button or MODE button to exit the volume adjustment menu; or do not touch any button for 30 seconds to lock in your selection.

Restore Factory Settings

(Display must be OFF, POWER button is amber color) Press the MODE and DOWN buttons simultaneously for 1.5 seconds, the beeper sounds a beep and factory settings are restored. See "Default Settings For Automatic Mode".

Remote Control

The remote control will control your heater from a distance no more than 20 feet away from the unit. When pointing the device it must be in line of sight in order to operate correctly. The remote will not program your heater. It will only turn the heater ON or OFF and adjust the set temperature UP or DOWN.

There are only four buttons that are active:

1. Power ON ON button.
2. Power OFF OFF button.
3. DOWN button to lower the displayed temperature (located bottom left)
4. UP button to raise the displayed temperature (located bottom right)

NOTE: Should you misplace your remote; the operation of your heater can be controlled at the heater display.

Operational Notice

This heater is equipped with a manual-reset safety limit control that will automatically turn off the heater if it overheats to prevent a fire. A red warning light will illuminate (visible through the grille) to alert that this control has activated. See Figure 8 for the location of these devices.

CAUTION ⚠

THE ACTIVATION OF THE SAFETY LIMIT CONTROL AND RED WARNING LIGHT OCCURS WHEN THE HEATER OVERHEATS. CHECK HEATER TO MAKE SURE IT IS NOT BLOCKED – IF SO, REMOVE THE BLOCKAGE. IF THERE IS NO BLOCKAGE, IT IS RECOMMENDED THAT THE HEATER BE INSPECTED BY A REPUTABLE ELECTRICIAN OR REPAIR SERVICE TO ENSURE THE HEATER IS NOT DAMAGED. DO NOT CONTINUE TO USE HEATER IF IT REPEATEDLY CYCLES OFF ON THIS SAFETY LIMIT.

TO RESET SAFETY LIMIT (SEE FIGURE 8)

The manual reset button is located behind the front grille above the element on the left side. Once the heater has cooled, push the reset button through the grille. The heater should return to normal operation.

⚠ WARNING ⚠

DO NOT TAMPER WITH OR BYPASS ANY SAFETY LIMITS INSIDE HEATER.

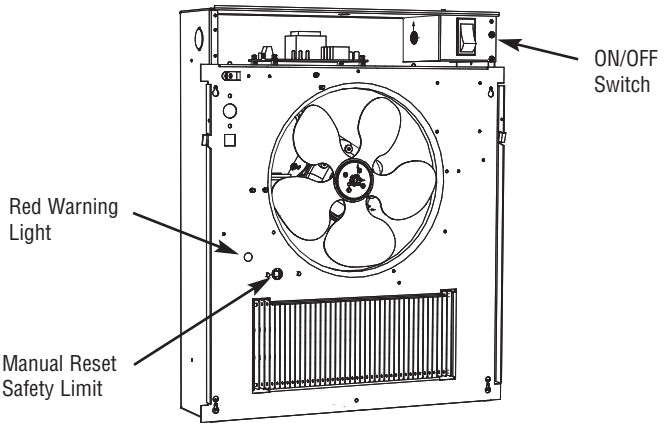

Figure 8 Reset Button Location

CAUTION ⚠

CAUTION - DO NOT CONTINUE TO ATTEMPT TO USE THE HEATER IF THE SAFETY CONTROL REPEATEDLY OPERATES AFTER BEING RESET. TO DO SO COULD PERMANENTLY DAMAGE THE HEATER OR CREATE A FIRE OR SAFETY HAZARD.

MAINTENANCE INSTRUCTIONS

Your heater is designed for years of trouble-free operation and requires no special maintenance other than occasional cleaning. The motor is permanently lubricated.

Cleaning

At least once each year (or more often in dirty environments), the heater should be cleaned to remove dust and other foreign material which has collected during the heating season, as follows:

⚠ WARNING ⚠

THE OUTSIDE SURFACES MAY BE CLEANED WITH MILD DETERGENT AND A DAMP CLOTH BY THE USER. ALL OTHER SERVICING SHOULD BE PERFORMED BY AN ELECTRICIAN OR QUALIFIED PERSON

1. Turn power OFF at main switch.

NOTE: With grille removed, the ON/OFF switch located in upper right corner of heater may be used to turn off power to heater during cleaning and servicing (see Figure 8).

2. Remove front grille by removing the four screws in each corner.
3. Use vacuum cleaner with brush attachment to remove dust and dirt that has accumulated in heater (especially around element and blower blade). Do not use water or any cleaners to clean heater components.
4. Replace grille.
5. Wipe grille clean with a damp cloth. DO NOT use waxes or any cleaners that leave a residue since these may discolor during heater operation.
6. Turn the main line switch ON at the switch panel to restore power to heater. The heater is now ready for another season of operation.

REPAIR PARTS

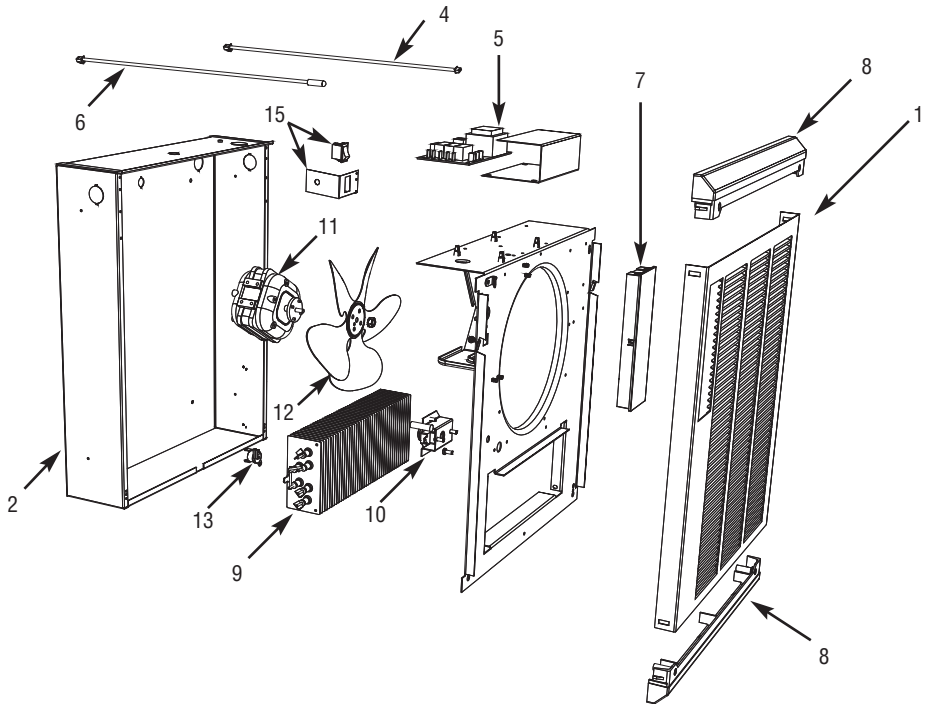

Repair Parts List

Ref No.	Description	Part Number HTWH4008 208V 4000W	HTWH4004 240V 4000W	HTWH4007 277V 4000W	Quantity
1	Painted Grille				
	Northern White	2501-11022-000	2501-11022-000	2501-11022-000	1
	Statuary Bronze	2501-11022-001	2501-11022-001	2501-11022-001	1
	Navajo White	2501-11022-002	2501-11022-002	2501-11022-002	1
2	Back Box Assembly	1203-2015-000	1203-2015-000	1203-2015-000	1
3	Parts Bag (not shown)	1205-2020-002	1205-2020-002	1205-2020-002	1
4	Data Cable	1426-11010-001	1426-11010-001	1426-11010-001	1
5	Control Board (power board)	1414-11043-000	1414-11043-000	1414-11043-001	1
6	Thermistor	5262-11006-000	5262-11006-000	5262-11006-000	1
7	Touch Pad / Bezel Assembly	1016-11199-000	1016-11199-000	1016-11199-000	1
8	Plastic Cover (top and bottom identical)				
	Northern White	1402-2120-002	1402-2120-002	1402-2120-002	1
	Statuary Bronze	1402-2120-001	1402-2120-001	1402-2120-001	1
	Navajo White	1402-2120-000	1402-2120-000	1402-2120-000	1
9	Element Assembly	1802-11005-000	1802-11005-001	1802-11005-002	1
10	Safety Limit - Manual	4520-2027-000	4520-2027-000	4520-2027-000	1
11	Fan Motor	3900-2002-522	3900-2002-522	3900-2002-523	1
12	Fan Blade	490030103	490030103	490030103	1
13	Fan Delay	410074000	410074000	410074000	1
14	Indicator Light (not shown)	3510-2017-005	3510-2017-005	3510-2017-005	1
15	ON/OFF Assembly	5216-2008-000	5216-2008-000	5216-2008-000	1

LIMITED WARRANTY

All products manufactured by Marley Engineered Products are warranted against defects in workmanship and materials for one year from date of installation, except heating elements which are warranted against defects in workmanship and materials for five years from date of installation. This warranty does not apply to damage from accident, misuse, or alteration; nor where the connected voltage is more than 5% above the nameplate voltage; nor to equipment improperly installed or wired or maintained in violation of the product's installation instructions. All claims for warranty work must be accompanied by proof of the date of installation.

The customer shall be responsible for all costs incurred in the removal or reinstallation of products, including labor costs, and shipping costs incurred to return products to Marley Engineered Products Service Center. Within the limitations of this warranty, inoperative units should be returned to the nearest Marley authorized service center or the Marley Engineered Products Service Center, and we will repair or replace, at our option, at no charge to you with return freight paid by Marley. It is agreed that such repair or replacement is the exclusive remedy available from Marley Engineered Products.

THE ABOVE WARRANTIES ARE IN LIEU OF ALL OTHER WARRANTIES EXPRESSED OR IMPLIED, AND ALL IMPLIED WARRANTIES OF MERCHANTABILITY AND FITNESS FOR A PARTICULAR PURPOSE WHICH EXCEED THE AFORESAID EXPRESSED WARRANTIES ARE HEREBY DISCLAIMED AND EXCLUDED FROM THIS AGREEMENT. MARLEY ENGINEERED PRODUCTS SHALL NOT BE LIABLE FOR CONSEQUENTIAL DAMAGES ARISING WITH RESPECT TO THE PRODUCT, WHETHER BASED UPON NEGLIGENCE, TORT, STRICT LIABILITY, OR CONTRACT.

Some states do not allow the exclusion or limitation of incidental or consequential damages, so the above exclusion or limitation may not apply to you. This warranty gives you specific legal rights, and you may also have other rights which vary from state to state.

For the address of your nearest authorized service center, contact Marley Engineered Products in Bennettsville, SC, at 1-800-642-4328. Merchandise returned to the factory must be accompanied by a return authorization and service identification tag, both available from Marley Engineered Products. When requesting return authorization, include all catalog numbers shown on the products.

HOW TO OBTAIN WARRANTY SERVICE AND WARRANTY PARTS PLUS GENERAL INFORMATION

1. Warranty Service or Parts **1-800-642-4328**
2. Purchase Replacement Parts **1-800-654-3545**
3. General Product Information **www.marleymep.com**

Note: When obtaining service always have the following:

1. Model number of the product
2. Date of manufacture
3. Part number or description

Marley Engineered Products

470 Beauty Spot Rd. East
Bennettsville, SC 29512 USA