470 Beauty Spot Rd. E
Bennettsville, SC 29512

SUBMITTAL SHEET
GUX SERIES
EXPLOSION-PROOF UNIT HEATER

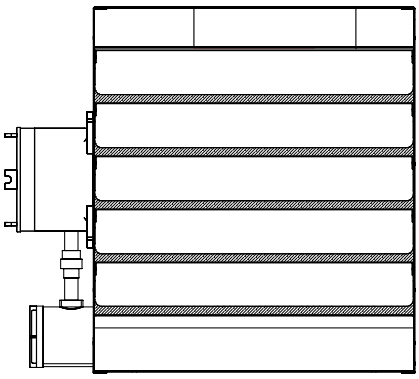

C US

CAPACITIES
2.5–35 kW | 208–600V | 1Ø or 3Ø
Thermostat Range: 50°–90° F
Air Volume: 550–3850 CFM
Air Throw Range: 13–75 feet
Class 1, Divisions 1 & 2, Groups C & D
Class II, Divisions 1 & 2, Groups E, F & G
Class 1, Zones 1 & 2, Groups IIB
Ignition Temperature Code T3C, 320° F

See Selection Chart for Options

GUX SERIES – **EXPLOSION-PROOF UNIT HEATER**

JOB NAME: _____

LOCATION: _____

ARCHITECT: _____

ENGINEER: _____

CONTRACTOR: _____

SUBMITTED BY: _____ DATE: _____

TAG/ITEM	QTY.	CATALOG NUMBER	HEATER			AMPS	AIR MOVEMENT		
			KW	VOLTS	Ø		CFM	THROW	TEMP. RISE

ACCESSORIES AND CONTROLS	TAG/ITEM	QTY.	CATALOG NUMBER	DESCRIPTION

SUBMITTED BY:	DATE

APPROVED BY:	DATE

ARCHITECT'S AND ENGINEER'S SPECIFICATIONS*

Electric explosion proof unit heater(s) shall be supplied by QMark,® a Marley Engineered Products® Brand, Bennettsville, SC, USA, and shall be of the KW rating, voltage and phase specified in the schedule. They shall be fan-forced type, certified to cCSAus, and approved for Class I, Divisions 1 and 2, Group C and D; Class II, Divisions 1 and 2, Groups E, F and G; Class I, Zones 1 and 2, Group IIB; Temperature Code T3C, 320°F (160°C).

SAFETY: Unit heaters shall be outfitted with dual overtemperature production—both a manual and automatic reset thermal cutout.

HEAT EXCHANGER: Efficient liquid-to-air design utilizes an all welded steel headers and finned tube construction with spiral wound aluminum fins. Industrial grade heating elements are immersed in a nontoxic, inhibited, propylene glycol heat transfer fluid that provides freeze protection down to -49°F (-45°C). The heat exchanger is hydrostatically tested at 350 psig. A pressure relief valve provides excess pressure protection and is set at 70 psig.

ENCLOSURE: Heat exchanger and components to be enclosed in an industrial grade cabinet fabricated from polyester powder-coated, 14 gauge steel. Adjustable outlet louvers to have minimum opening safety stops.

FAN MOTOR ASSEMBLY: Unit heaters consist of an explosion-proof motor (60hz standard, 50hz optional) fitted with an aluminum fan blade. The motor has double shielded, permanently lubricated ball bearings and automatic reset line breaking thermal overload protection. Motors furnished on standard units operate at line voltage and are prewired to the control enclosure so separate field wiring to the motor is not required. The standard motor is rated for Class I, Groups C and D, Class II, Groups F and G. The minimum operating temperature is -14°F (-25°C) and the minimum storage temperature is -49°F (-45°C). Optional motor ratings available.

MOUNTING: The heater shall be compatible with an accessory mounting kit designed to bear the weight of the heater assembly. Available accessory options include ceiling, wall, or pole mounting kits. Mounting kits shall be ordered separately and are not included with the heater.

OPTIONAL BUILT-IN CONTROLS: Units come standard with a controlling magnetic contactor and 24 Volt control circuit transformer housed in a NEMA 7, 9 cast aluminum enclosure. The following factory installed and prewired control options are available: adjustable built-in thermostat, disconnect switch with external handle, fan only switch, 120 Volt control circuit for special external thermostat circuit, "warning" pilot light (to indicate abnormal operation), "Heater On" pilot light

**QMark reserves the right to change specifications without prior notice.*

Approvals: _____ _____ _____

60 Hz Models & Specifications:

ITEM INFORMATION	ELECTRICAL DATA				MOTOR			AIR FLOW			FRAME SIZE	SHIP WT.
CATALOG NO.	VOLTS	PHASE	TOTAL AMPS*	KW	HP	RPM	FAN BLADE DIAMETER	RISE**	CFM	THROW		
GUX-233-FA-0036C	208	1	17	3.0	¼	1725	12″	15°F	650	15″	1	130 lbs
GUX-233-FA-0036J	240	1	15		¼	1725	12″	15°F	650	15″	1	130 lbs
GUX-233-FA-0036D	208	3	10		¼	1725	12″	15°F	650	15″	1	130 lbs
GUX-233-FA-0036K	240	3	9		¼	1725	12″	15°F	650	15″	1	130 lbs
GUX-233-FA-0036U	480	3	5		¼	1725	12″	15°F	650	15″	1	130 lbs
GUX-233-FA-0036Z	600	3	4		¼	1725	12″	15°F	650	15″	1	130 lbs
GUX-233-FA-0056C	208	1	26	5.0	¼	1725	12″	25°F	650	15″	1	130 lbs
GUX-233-FA-0056J	240	1	23		¼	1725	12″	25°F	650	15″	1	130 lbs
GUX-233-FA-0056D	208	3	16		¼	1725	12″	25°F	650	15″	1	130 lbs
GUX-233-FA-0056K	240	3	14		¼	1725	12″	25°F	650	15″	1	130 lbs
GUX-233-FA-0056U	480	3	7		¼	1725	12″	25°F	650	15″	1	130 lbs
GUX-233-FA-0056Z	600	3	6		¼	1725	12″	25°F	650	15″	1	130 lbs
GUX-233-FA-0086C	208	1	38	7.5	¼	1725	12″	28°F	850	25″	1	130 lbs
GUX-233-FA-0086J	240	1	34		¼	1725	12″	28°F	850	25″	1	130 lbs
GUX-233-FA-0086D	208	3	23		¼	1725	12″	28°F	850	25″	1	130 lbs
GUX-233-FA-0086K	240	3	20		¼	1725	12″	28°F	850	25″	1	130 lbs
GUX-233-FA-0086U	480	3	10		¼	1725	12″	28°F	850	25″	1	130 lbs
GUX-233-FA-0086Z	600	3	9		¼	1725	12″	28°F	850	25″	1	130 lbs
GUX-233-FA-0106J	240	1	44	10	¼	1725	12″	38°F	850	25″	1	130 lbs
GUX-233-FA-0106D	208	3	30		¼	1725	12″	38°F	850	25″	1	130 lbs
GUX-233-FA-0106K	240	3	26		¼	1725	12″	38°F	850	25″	1	130 lbs
GUX-233-FA-0106U	480	3	13		¼	1725	12″	38°F	850	25″	1	130 lbs
GUX-233-FA-0106Z	600	3	11		¼	1725	12″	38°F	850	25″	1	130 lbs
GUX-233-FB-0156D	208	3	44	15	¼	1725	16″	27°F	1800	45″	2	169 lbs
GUX-233-FB-0156K	240	3	38		¼	1725	16″	27°F	1800	45″	2	169 lbs
GUX-233-FB-0156U	480	3	19		¼	1725	16″	27°F	1800	45″	2	169 lbs
GUX-233-FB-0156Z	600	3	16		¼	1725	16″	27°F	1800	45″	2	169 lbs
GUX-233-FB-0206U	480	3	25	20	¼	1725	16″	35°F	1800	45″	2	169 lbs
GUX-233-FB-0206Z	600	3	21		¼	1725	16″	35°F	1800	45″	2	169 lbs
GUX-233-FC-0256U	480	3	31	25	½	1725	20″	26°F	3110	65″	3	216 lbs
GUX-233-FC-0256Z	600	3	25		½	1725	20″	26°F	3110	65″	3	216 lbs
GUX-233-FC-0306U	480	3	37	30	½	1725	20″	25°F	3850	75″	3	216 lbs
GUX-233-FC-0306Z	600	3	30		½	1725	20″	25°F	3850	75″	3	216 lbs
GUX-233-FC-0356U	480	3	43	35	½	1725	20″	29°F	3850	75″	3	216 lbs
GUX-233-FC-0356Z	600	3	35		½	1725	20″	29°F	3850	75″	3	216 lbs

*Total Amps = Heating element and motor amps. **Approximate air temperature rise

Approvals: _____ _____ _____

50 Hz Models & Specifications:

ITEM INFORMATION	ELECTRICAL DATA				MOTOR			AIR FLOW			FRAME SIZE	SHIP WT.
CATALOG NO.	VOLTS	PHASE	TOTAL AMPS*	KW	HP	RPM	FAN BLADE DIAMETER	RISE**	CFM	THROW		
GUX-233-FA-0036E	220	1	14	2.5	¼	1438	12″	14°F	550	13″	1	130 lbs
GUX-233-FA-0036F	220	3	9		¼	1438	12″	14°F	550	13″	1	130 lbs
GUX-233-FA-0036G	380	3	6		¼	1438	12″	14°F	550	13″	1	130 lbs
GUX-233-FA-0036H	400	3	6		¼	1438	12″	14°F	550	13″	1	130 lbs
GUX-233-FA-0036I	415	3	5		¼	1438	12″	14°F	550	13″	1	130 lbs
GUX-233-FA-0056E	220	1	21	4.2	¼	1438	12″	24°F	550	13″	1	130 lbs
GUX-233-FA-0056F	220	3	13		¼	1438	12″	24°F	550	13″	1	130 lbs
GUX-233-FA-0056G	380	3	9		¼	1438	12″	24°F	550	13″	1	130 lbs
GUX-233-FA-0056H	400	3	8		¼	1438	12″	24°F	550	13″	1	130 lbs
GUX-233-FA-0056I	415	3	7		¼	1438	12″	24°F	550	13″	1	130 lbs
GUX-233-FA-0076E	220	1	31	6.3	¼	1438	12″	28°F	700	22″	1	130 lbs
GUX-233-FA-0076F	220	3	19		¼	1438	12″	28°F	700	22″	1	130 lbs
GUX-233-FA-0076G	380	3	12		¼	1438	12″	28°F	700	22″	1	130 lbs
GUX-233-FA-0076H	400	3	11		¼	1438	12″	28°F	700	22″	1	130 lbs
GUX-233-FA-0076I	415	3	10		¼	1438	12″	28°F	700	22″	1	130 lbs
GUX-233-FA-0096E	220	1	40	8.4	¼	1438	12″	38°F	700	22″	1	130 lbs
GUX-233-FA-0096F	220	3	24		¼	1438	12″	38°F	700	22″	1	130 lbs
GUX-233-FA-0096G	380	3	15		¼	1438	12″	38°F	700	22″	1	130 lbs
GUX-233-FA-0096H	400	3	13		¼	1438	12″	38°F	700	22″	1	130 lbs
GUX-233-FA-0096I	415	3	13		¼	1438	12″	38°F	700	22″	1	130 lbs
GUX-233-FB-0136F	220	3	35	12.5	¼	1438	16″	26°F	1500	39″	2	169 lbs
GUX-233-FB-0136G	380	3	21		¼	1438	16″	26°F	1500	39″	2	169 lbs
GUX-233-FB-0136H	400	3	19		¼	1438	16″	26°F	1500	39″	2	169 lbs
GUX-233-FB-0136I	415	3	18		¼	1438	16″	26°F	1500	39″	2	169 lbs
GUX-233-FB-0176F	220	3	46	16.7	¼	1438	16″	35°F	1500	39″	2	169 lbs
GUX-233-FB-0176G	380	3	28		¼	1438	16″	35°F	1500	39″	2	169 lbs
GUX-233-FB-0176H	400	3	25		¼	1438	16″	35°F	1500	39″	2	169 lbs
GUX-233-FB-0176I	415	3	24		¼	1438	16″	35°F	1500	39″	2	169 lbs
GUX-233-FC-0216G	380	3	33	21	½	1438	20″	26°F	2600	57″	3	216 lbs
GUX-233-FC-0216H	400	3	32		½	1438	20″	26°F	2600	57″	3	216 lbs
GUX-233-FC-0216I	415	3	31		½	1438	20″	26°F	2600	57″	3	216 lbs
GUX-233-FC-0256G	380	3	39	25	½	1438	20″	30°F	2600	57″	3	216 lbs
GUX-233-FC-0256H	400	3	37		½	1438	20″	30°F	2600	57″	3	216 lbs
GUX-233-FC-0256I	415	3	36		½	1438	20″	30°F	2600	57″	3	216 lbs

*Total Amps = Heating element and motor amps. **Approximate air temperature rise

Approvals: _____ _____ _____

Factory Built-in Options:

CATALOG NO.	OPTION	DESCRIPTION
D	Disconnect Switch	Factory installed on the unit heater above the control enclosure. This is an inexpensive and positive way to meet NEC/CEC requirements for a disconnecting means within sight of the heater.
K	"Warning" Pilot Light	Indicates when the thermal cutouts have tripped and the unit heater needs servicing. ***Not available with combination V & L***.
L	"Heater On" Pilot Light	Indicates when the electric heating elements are energized. ***Not available with combination V & K***
M	Manual Reset Thermal Cutout with Backup Contactor	A pilot duty manual reset thermal cutout with a backup contactor is provided for independent secondary overtemperature protection. ***Cannot be installed with S, S1 or V***.
S	Auto/Fan Selector Switch	A two-position switch wired to the control circuit for auto (automatic heat) and fan only control. ***Cannot be installed with M, V or S1***.
S1	Built-In Controls for Remote Auto/Fan Selector Switch	Unit is prewired for field addition of remote auto/fan selector switch. ***Cannot be installed with M, V or S***.
T	Adjustable Thermostat	Factory installed and prewired to the control enclosure. Thermostat is adjustable from 50° to 90° F (10° to 32°C).
T1	Adjustable Thermostat for Wet Locations	Factory installed and prewired to the control enclosure. Thermostat is adjustable from 40° to 80° F (5° to 25°C). Can be specified for all constructions.
V	120 Volt Control Circuit	Can be provided when required for special external thermostat circuit. ***Cannot be installed with S, S1, M or the combination of both K & L together***.

Note: Both pilot lights (K & L) are not available with 120V option (V). Only one pilot light can be ordered with 120V control heaters.

Standard Mounting Kits:

CATALOG NO.	DESCRIPTION
1022451	Ceiling Mounting Kit
1022454	Wall Mounting Kit
1022457	Pole Mounting Kit

Note: One kit required per heater. Work with all frame sizes

Accessory Remote Thermostats:

CATALOG NO.	SWITCH TYPE	TYPE	RATING	TEMP RANGE	DESCRIPTION
1007002	Bimetal	SPDT	125–277V, 22A	50°–90°F (10°–32°C)	Class 1, Div. 1, Groups C & D. Class II, Div. 1, Groups E, F, & G
QX-1024754	Bulb and Capillary with Internal Set Point Adjustment	SPDT	120–240V, 25A 277V, 22A	40°–120°F (5°–49°C)	Class 1, Div. 1, Groups B, C & D. Class II, Div. 1, Groups E, F, & G
QX-1025396		SPST	120–240V, 25A 277V, 22A	40°–120°F (5°–49°C)	Corrosion-Resistant Class 1, Div. 1, Groups B, C, & D. Class II, Div. 1, Groups E, F & G
1036506	Bimetal	SPDT	480V, 15A	40°–80°F (5°–25°C)	Class I, Div. 1, Groups C & D. Class II, Div. 1, Groups E, F, & G. Class III. IP66, Type 4

Remote Fan Switch:

CATALOG NO.	SWITCH TYPE	RATING	HUBS	DESCRIPTION
1001744	2-Position	120/277V, 30A	(2) ¾" NPT Hubs	Class I, Div. 1, Groups C & D. Class II, Div. 1, Groups E, F, & G. Class III
1031042	2-Position	110V, 6A		Class I, Div. 1, Groups C & D. Class II, Div. 1, Groups E, F, & G. Class III. NEMA 4X

Approvals: _____ _____ _____

GUX SERIES

Dimensions and Clearances:

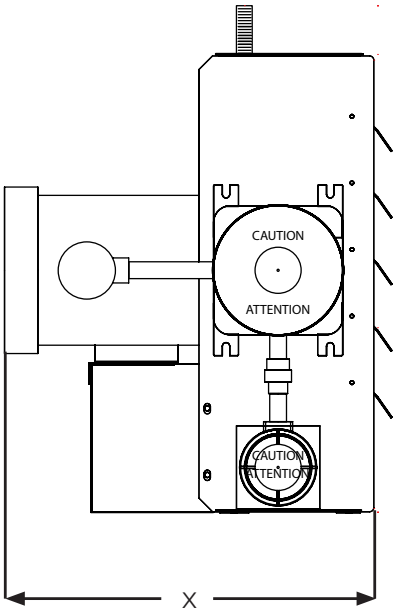

Side View

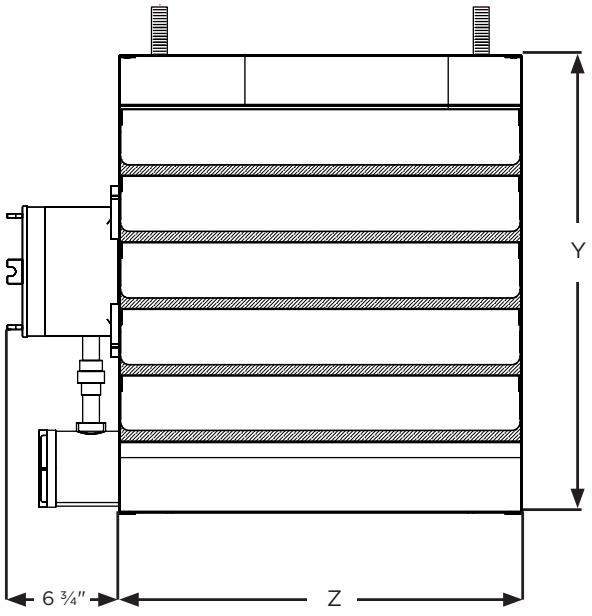

Front View

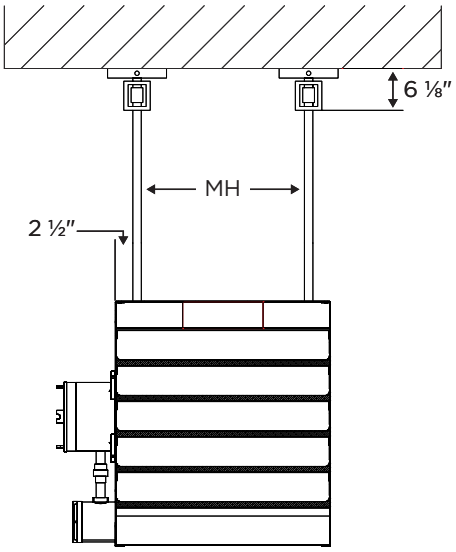

Ceiling Mounting Kit

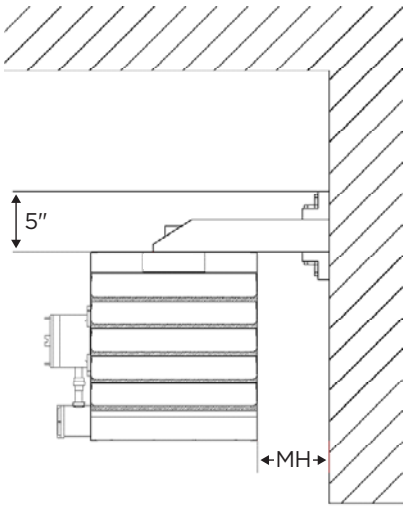

Wall Mounting Kit

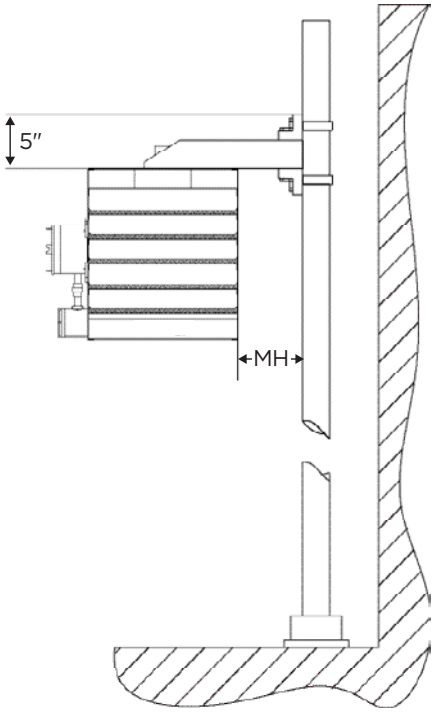

Pole Mounting Kit

SIZE	X	Y	Z	MH	MW
1	22 ½"	19 ⅜"	16 1⁄16"	11 1⁄16"	9"
2	22 ½"	23 ⅜"	20 3⁄16"	15 1⁄16"	7"
3	22 ¾"	27 ⅜"	24 3⁄16"	19 1⁄16"	5"

Approvals: _____ _____ _____

GUX SERIES

How to Order

Example:

GUX	-	233	-	F	A	-	010	6	U	-	DKS	00

Brand: **GUX**

Series: **233** = Unit Heater, Explosion Proof

Agency Approval: **F** = cCSAus Approval (standard), **N** = No Approval

Cabinet Size: **A** = Size 1, 12″ Fan, 0–10 kW, **B** = Size 2, 16″ Fan, 10.1–20 KW, **C** = Size 3, 20″ Fan, 20.1–35 KW

kW*: **003**, **005**, **008**, **010**, **015**, **020**, **025**, **030**, **035**

Temperature Rating: **6** = T3C Temperature Rating

Voltage & Phase:
Standard Offering—60Hz
C = 208V/1, **D** = 208V/3, **J** = 240V/1, **K** = 240V/3, **U** = 480V/3, **Z** = 600V/3.
Additional/Special Offering—60Hz
A = 115/1, **B** = 120/1, **E** = 220/1, **F** = 220/3, **G** = 230/1, **H** = 230/3, **I** = 347/1, **N** = 277/1. **O**** = Special, **Q** = 440/3, **S** = 460/3, **X** = 575/3.
Standard Offering—50Hz*
E = 220/1, **F** = 220/3, **G** = 380/3, **H** = 400/3, **I** = 415/3.

Product Serial Code**

Factory Install Options: **D** = Disconnect Switch, **K** = “Warning” Pilot Light, **L** = “Heater On” Pilot Light, **M** = Manual Reset Thermal Cutout with Backup Contactor, **S** = Auto/Fan Selector Switch, **S1** = Built-In Controls for Remote Auto/Fan Selector Switch, **T** = Adjustable Thermostat, **T1** = Adjustable Thermostat for Wet Locations, **V** = 120 Volt Control Circuit

*Round up to the nearest whole kW
**For custom requests, contact Marley sales representative for assistance and additional detail
***Option Code "H" indicates 50 Hz Heater
Contact Marley Sales Representative for additional configuration details

No matter the industry or application, Marley Engineered Products has a robust portfolio of innovative, reliable, high-performance comfort heating and ventilation solutions for all your heating needs.

For more information or assistance on your next project, contact Technical Services at 800-642-4328

Scan the QR code to access additional specs and features

Approvals: _____ _____ _____