G Series Thermostat Accessories

Single & Double Pole

Installation Instructions

NOTE: Accessories described in this instruction manual are intended for use with Marley Engineered Products G Series Fan Forced Wall Heaters only.

SPECIFICATIONS		
Model No.	Description	Electrical Ratings
GTSP	Single Pole	22 A 120/240 AC
GTDP	Double Pole	

c UL us

⚠ WARNING ⚠

This instruction sheet contains vital information for the proper installation and use of the accessories described herein. Carefully read this manual before installation, operation, or service of the accessory. Failure to follow these instructions could result in fire, electric shock, death, serious personal injury, or property damage. Save these instructions for reference by future users.

WARNING: HAZARD OF FIRE OR ELECTRIC SHOCK.

1. Be sure electric power is disconnected at main fuse or circuit breaker distribution panel before installation or servicing.
2. The installation must comply with all Local and National Electrical Codes and utility requirements.
3. Refer to installation instructions provided with the heater when installing these accessories.
4. Check accessory and heater nameplate to verify power requirements match power supply coming to heater and accessory. Make sure total power requirements do not exceed ratings of accessory..

INSTALLATION

NOTE: It is recommended that no more than one thermostat be used in each room (or area).

1. The thermostat must be installed in right end of the heater.
2. Position thermostat above slot in right end of back box. Push tab on thermostat bracket through slot in top, right end of back box until the bracket locks in place. See Fig. 1.
3. If the thermostat is controlling more than one heater, the total of all heater amperage ratings (Table 1) cannot exceed 22 amps at 120 volts AC thru 240 volts AC. Refer to Table 2 for correct wire, circuit breaker, or fuse sizing.

Figure 1

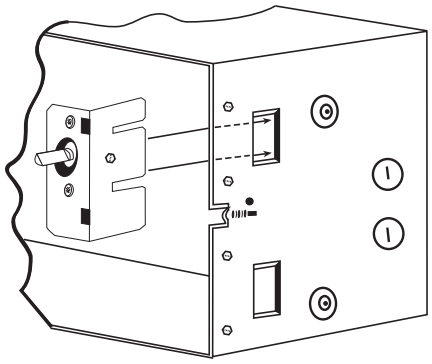

4. Connect thermostat to heater and power wiring per wiring diagram (Fig. 2a & 2b) using properly sized listed wire nuts.
5. Fold wires back into wiring compartment. Remove 1/2" knockout from grille and install grille. Push thermostat knob on thermostat shaft.
6. Reconnect power at main fuse or circuit breaker distribution panel.

Figure 2a

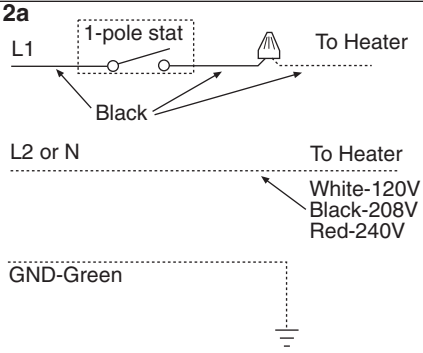

Figure 2b

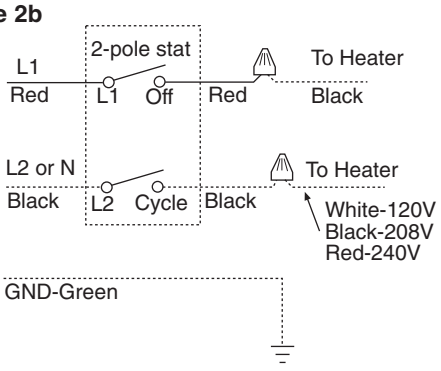

TABLE 1			
MODEL	VOLTS	WATTS	AMPS
G0512IF	120	500	4.2
G1012IF	120	1000	8.3
G1512IF	120	1500	12.5
G2028IF	208	2000	9.6
G0524IF	240	500	2.1
G1024IF	240/208	1000/750	4.2/3.6
G1524IF	240/208	1500/1125	6.3/5.4
G2024IF	240/208	2000/1500	8.3/7.2
G2224IF	240/208	2250/1688	9.4/8.1

SAVE THESE INSTRUCTIONS

FIELD WIRE & PROTECTION CHART TABLE 2		
TOTAL AMPS	WIRE SIZE (COPPER)	CIRCUIT BREAKER OR FUSE SIZE
0 thru 12	#14	15 Amps
12.1 thru 16	#12	20 Amps
16.1 thru 24	#10	30 Amps

OPERATION CHECK

1. After your G Series wall heater has been completely installed, all thermostats, whether single pole or double pole, should be turned to LOW or OFF. Turn on breakers or install fuses. Wait 3 to 5 minutes and check to make sure the heater is not operating. Should it be operating, disconnect power and check your wiring. If not operating, turn the thermostat to the highest position and wait another 3 to 5 minutes. Then check to see that all heaters are operating. Should it not be operating, again disconnect power and check your wiring.
2. Allow heater to operate steadily for 1/2 hour.
3. Select the setting for your comfort level.

NOTE: Your electric heating system has many advantages, one of which is zone or room-by-room control. If you desire to keep a seldom used room at a lower temperature, this may be done by lowering the thermostat setting and closing the door. However, DO NOT try to control different rooms at different temperatures unless the doors are kept closed. This will tend to increase operating cost and decrease comfort. It is advisable, if rooms are kept open, that all thermostats have the same setting. By following these instructions you will enjoy greater comfort.

IMPORTANT INFORMATION

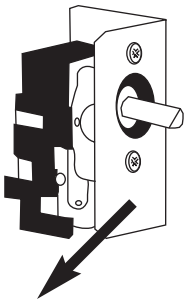

NAMEPLATE

DATE CODE **0399** **GTSP**

Marley Engineered Products1 POLE STAT

BENNETTSVILLE, SC 29512

774G LISTED ROOM HEATER ACCESSORY

c UL us

4104-2160-004

VAC 60 HZ AMPS
120 - 240 22 RES.

LIMITED WARRANTY

All products covered by this instruction sheet are warranted against defects in workmanship and materials for one year from date of installation. This warranty does not apply to damage from accident, misuse, or alteration; nor where the connected voltage is more than 5% above the nameplate voltage; nor to equipment improperly installed or wired or maintained in violation of this instruction sheet. All claims for warranty work must be accompanied by proof of the date of installation.

The customer shall be responsible for all costs incurred in the removal or reinstallation of products, including labor costs, and shipping costs incurred to return products to a Marley Engineered Products Service Center, and we will repair or replace, at our option, at no charge to you with return freight paid by Marley. It is agreed that such repair or replacement is the exclusive remedy available from Marley Engineered Products.

THE ABOVE WARRANTIES ARE IN LIEU OF ALL OTHER WARRANTIES EXPRESSED OR IMPLIED, AND ALL IMPLIED WARRANTIES OF MERCHANTABILITY AND FITNESS FOR A PARTICULAR PURPOSE WHICH EXCEED THE AFORESAID EXPRESSED WARRANTIES ARE HEREBY DISCLAIMED AND EXCLUDED FROM THIS AGREEMENT. MARLEY ENGINEERED PRODUCTS SHALL NOT BE LIABLE FOR CONSEQUENTIAL DAMAGES ARISING WITH RESPECT TO THE PRODUCT, WHETHER BASED UPON NEGLIGENCE, TORT, STRICT LIABILITY, OR CONTRACT.

Some states do not allow the exclusion on limitation of incidental or consequential damages, so the above exclusion or limitation may not apply to you. This warranty gives you specific legal rights, and you may also have other rights which vary from state.

For the address of your nearest authorized service center, contact Marley Engineered Products, 470 Beauty Spot Road East, Bennettsville, SC 29512 USA. Merchandise returned to the factory must be accompanied by a return authorization and service identification tag, both available from the above location. When requesting return authorization, include all catalog numbers shown on the products.

HOW TO OBTAIN WARRANTY SERVICE AND WARRANTY PARTS PLUS GENERAL INFORMATION

1. Warranty Service or Parts **1-800-642-4328**
2. Purchase Replacement Parts **1-800-654-3545**
3. General Product Information **www.marleymep.com**

Note: When obtaining service always have the following:
1. Model number of the product
2. Date of manufacture
3. Part number or description

Marley Engineered Products

470 Beauty Spot Rd. East
Bennettsville, SC 29512 USA

ECR 37958
5200-2426-001
10/08