EXPLOSION-PROOF SERIES
Convection Heater

HARSH ENVIRONMENT PRODUCTS

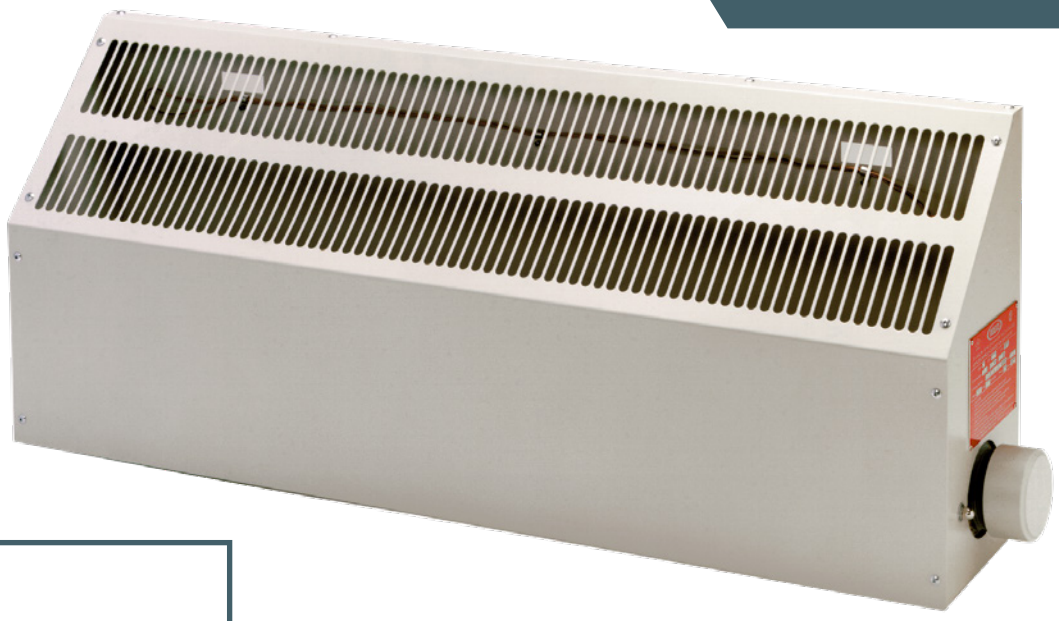

Classes:

Class I, Divisions 1 & 2, Groups B, C & D
Class II, Divisions 1 & 2, Groups E, F & G
Class I, Zones 1 & 2, Groups IIB & H2

Ideal Spaces:

Battery Storage Areas
Chemical Plants
Coal Handling Facilities
Dry Cleaning Plants
Gasoline Fueling & Storage Areas
Grain Elevators
Oil Refineries
Paint Spraying & Storage Areas
Petrochemical Plants

Beige

- Wide Selection of Sizes: Four compact sizes to fit any space with ratings from 500 to 9,500 watts
- Sloped Top Cabinet: Prevents objects from being set on top of the convector, which can restrict airflow and cause overheating
- Single and Three-Phase: Unique design provides single and balanced three-phase loads in a single element
- Gas and Dust Atmospheres: Three listings cover the entire field, two for hazardous gases and vapors and one for dust particles

Standard Construction Features:

- Grade A Nickel-Chromium heating coils insulated with ceramics and fitted with aluminum fins
- Heavy gauge galvanized steel cabinet is painted with a beige powder coat for durability.
- A linear limit, automatic reset thermal cutout is built into every unit
- For larger single-phase and all three-phase units, a built-on contactor and transformer optional packages

C US

1 YEAR WARRANTY ELEMENT

1 YEAR WARRANTY WORKMANSHIP

QMARK A Marley Engineered Products Brand

EXPLOSION PROOF SERIES
Convection Air Heater

Class I, Divisions 1 & 2, Groups B, C & D
Class I, Zones 1 & 2 Groups IIB + H2
Ignition Temperature Code T2A, 536° F (280°C)

Models & Specifications:

ITEM INFORMATION		ELECTRICAL DATA				UNIT SIZE	OPTIONAL BUILT-ON CONTROLS		SHIP WT.**
	CATALOG NO.	VOLTS	PHASE	TOTAL AMPS	KW		CONTROLS ONLY	THERMOSTAT ONLY* OR THERMOSTAT WITH CONTROLS	
●	QX-254-F0310052B	120	1	4.2	0.5	1	—	1024754	13 lbs
●	QX-254-F0310052C	208	1	2.4			—	1024754	13 lbs
●	QX-254-F0310052J	240	1	2.1			—	1024754	13 lbs
●	QX-254-F0310052N	277	1	1.8			—	1024754	13 lbs
●	QX-254-F0310102B	120	1	8.3	1.0	1	—	1024754	13 lbs
●	QX-254-F0310102C	208	1	4.8			—	1024754	13 lbs
●	QX-254-F0310102J	240	1	4.2			—	1024754	13 lbs
●	QX-254-F0310102N	277	1	3.6			—	1024754	13 lbs
●	QX-254-F0320182B	120	1	15.0	1.8	2	Not Required	S2	13 lbs
●	QX-254-F0320182C	208	1	8.7			Not Required	S2	27 lbs
●	QX-254-F0320182J	240	1	7.5			Not Required	S2	27 lbs
●	QX-254-F0320182N	277	1	6.5			Not Required	S2	27 lbs
●	QX-254-F0320182I	347	1	5.2			B2	B3	27 lbs
●	QX-254-F0320182U	480	3	2.2			B2	B3	27 lbs
●	QX-254-F0320182Z	600	3	1.8			B2	B3	27 lbs
●	QX-254-F0320252C	208	1	12.0	2.5	2	Not Required	S2	27 lbs
●	QX-254-F0320252D	208	3	6.9			B2	B3	27 lbs
●	QX-254-F0320252J	240	1	10.4			Not Required	S2	27 lbs
●	QX-254-F0320252N	277	1	9.0			Not Required	S2	27 lbs
●	QX-254-F0320252I	347	1	7.2			B2	B3	27 lbs
●	QX-254-F0320252U	480	3	3.0			B2	B3	27 lbs
●	QX-254-F0320252Z	600	3	2.4			B2	B3	27 lbs
●	QX-254-F0330362C	208	1	17.3	3.6	3	Not Required	S2	36 lbs
●	QX-254-F0330362D	208	3	10.0			B2	B3	36 lbs
●	QX-254-F0330362J	240	1	15.0			Not Required	S2	36 lbs
●	QX-254-F0330362N	277	1	13.0			Not Required	S2	36 lbs
●	QX-254-F0330362I	347	1	10.4			B2	B3	36 lbs
●	QX-254-F0330362U	480	3	4.3			B2	B3	36 lbs
●	QX-254-F0330362Z	600	3	3.5			B2	B3	36 lbs
●	QX-254-F0330442D	208	3	12.2	4.4	3	B2	B3	36 lbs
●	QX-254-F0330442J	240	1	18.3			Not Required	S2	36 lbs
●	QX-254-F0330442N	277	1	15.9			Not Required	S2	36 lbs
●	QX-254-F0330442I	347	1	12.7			B2	B3	36 lbs
●	QX-254-F0330442U	480	3	5.3			B2	B3	36 lbs
●	QX-254-F0330442Z	600	3	4.3			B2	B3	36 lbs
●	QX-254-F0340652D	208	3	18.0	6.5	4	B2	B3	60 lbs
●	QX-254-F0340652J	240	3	27.1			B2	B3	60 lbs
●	QX-254-F0340652N	277	1	23.5			B2	B3	60 lbs
●	QX-254-F0340652I	347	1	18.7			B2	B3	60 lbs
●	QX-254-F0340652U	480	3	7.8			B2	B3	60 lbs
●	QX-254-F0340652Z	600	3	6.3			B2	B3	60 lbs
●	QX-254-F0340752D	208	3	20.8	7.5	4	B2	B3	60 lbs
●	QX-254-F0340752J	240	1	31.3			B2	B3	60 lbs
●	QX-254-F0340752N	277	1	27.1			B2	B3	60 lbs
●	QX-254-F0340752I	347	1	21.6			B2	B3	60 lbs
●	QX-254-F0340752U	480	3	9.0			B2	B3	60 lbs
●	QX-254-F0340752Z	600	3	7.2			B2	B3	60 lbs
●	QX-254-F0340952D	208	3	26.4	9.5	4	B2	B3	60 lbs
●	QX-254-F0340952J	240	1	39.6			B2	B3	60 lbs
●	QX-254-F0340952N	277	1	34.3			B2	B3	60 lbs
●	QX-254-F0340952I	347	1	27.4			B2	B3	60 lbs
●	QX-254-F0340952U	480	3	11.4			B2	B3	60 lbs
●	QX-254-F0340952Z	600	3	9.1			B2	B3	60 lbs

SKU Legend: ◆ **= Popular Products** ● **= Extended Offering** ■ **= Made to Order** (Contact your local Marley Sales Representative for typically associated lead times)
Convectors are 60/50 Hz rated *Thermostat only is load carrying or remote. **Without controls.

EXPLOSION PROOF SERIES
Convection Air Heater

Class I, Divisions 1 & 2, Groups C & D
Class I, Zones 1 & 2 Groups IIB
Ignition Temperature Code T2A, 536° F (280°C)

Models & Specifications:

ITEM INFORMATION		ELECTRICAL DATA				UNIT SIZE	OPTIONAL BUILT-ON CONTROLS		SHIP WT.**
	CATALOG NO.	VOLTS	PHASE	TOTAL AMPS	KW		CONTROLS ONLY	THERMOSTAT ONLY* OR THERMOSTAT WITH CONTROLS	
●	QX-254-F0310053B	120	1	4.2	0.5	1	—	1007002	13 lbs
●	QX-254-F0310053C	208	1	2.4			—	1007002	13 lbs
●	QX-254-F0310053J	240	1	2.1			—	1007002	13 lbs
●	QX-254-F0310053N	277	1	1.8			—	1007002	13 lbs
●	QX-254-F0310103B	120	1	8.3	1.0	1	—	1007002	13 lbs
●	QX-254-F0310103C	208	1	4.8			—	1007002	13 lbs
●	QX-254-F0310103J	240	1	4.2			—	1007002	13 lbs
●	QX-254-F0310103N	277	1	3.6			—	1007002	13 lbs
●	QX-254-F0320183B	120	1	15.0	1.8	2	Not Required	S1	27 lbs
●	QX-254-F0320183C	208	1	8.7			Not Required	S1	27 lbs
●	QX-254-F0320183J	240	1	7.5			Not Required	S1	27 lbs
●	QX-254-F0320183N	277	1	6.5			Not Required	S1	27 lbs
●	QX-254-F0320183I	347	1	5.2			B2	B2S1	27 lbs
●	QX-254-F0320183U	480	3	2.2			B2	B2S1	27 lbs
●	QX-254-F0320183Z	600	3	1.8			B2	B2S1	27 lbs
●	QX-254-F0320253C	208	1	12.0	2.5	2	Not Required	S1	27 lbs
●	QX-254-F0320253D	208	3	6.9			B2	B2S1	27 lbs
●	QX-254-F0320253J	240	1	10.4			Not Required	S1	27 lbs
●	QX-254-F0320253N	277	1	9.0			Not Required	S1	27 lbs
●	QX-254-F0320253I	347	1	7.2			B2	B2S1	27 lbs
●	QX-254-F0320253U	480	3	3.0			B2	B2S1	27 lbs
●	QX-254-F0320253Z	600	3	2.4			B2	B2S1	27 lbs
●	QX-254-F0330363C	208	1	17.3	3.6	3	Not Required	S1	36 lbs
●	QX-254-F0330363D	208	3	10.0			B2	B2S1	36 lbs
●	QX-254-F0330363J	240	1	15.0			Not Required	S1	36 lbs
●	QX-254-F0330363N	277	1	13.0			Not Required	S1	36 lbs
●	QX-254-F0330363I	347	1	10.4			B3	B3S1	36 lbs
●	QX-254-F0330363U	480	3	4.3			B2	B2S1	36 lbs
●	QX-254-F0330363Z	600	3	3.5			B2	B2S1	36 lbs
●	QX-254-F0330443D	208	3	12.2	4.4	3	B2	B2S1	36 lbs
●	QX-254-F0330443J	240	1	18.3			Not Required	S1	36 lbs
●	QX-254-F0330443N	277	1	15.9			Not Required	S1	36 lbs
●	QX-254-F0330443I	347	1	12.7			B2	B3S1	36 lbs
●	QX-254-F0330443U	480	3	5.3			B2	B2S1	36 lbs
●	QX-254-F0330443Z	600	3	4.3			B2	B2S1	36 lbs
●	QX-254-F0340653D	208	3	18.0	6.5	4	B2	B2S1	60 lbs
●	QX-254-F0340653J	240	1	27.1			B2	B2S1	60 lbs
●	QX-254-F0340653N	277	1	23.5			B2	B2S1	60 lbs
●	QX-254-F0340653I	347	1	18.7			B2	B2S1	60 lbs
●	QX-254-F0340653U	480	3	7.8			B2	B2S1	60 lbs
●	QX-254-F0340653Z	600	3	6.3			B2	B2S1	60 lbs
●	QX-254-F0340753D	208	3	20.8	7.5	4	B2	B2S1	60 lbs
●	QX-254-F0340753J	240	1	31.3			B2	B2S1	60 lbs
●	QX-254-F0340753N	277	1	27.1			B2	B2S1	60 lbs
●	QX-254-F0340753I	347	1	21.6			B2	B2S1	60 lbs
●	QX-254-F0340753U	480	3	9.0			B2	B2S1	60 lbs
●	QX-254-F0340753Z	600	3	7.2			B2	B2S1	60 lbs
●	QX-254-F0340953D	208	3	26.4	9.5	4	B2	B2S1	60 lbs
●	QX-254-F0340953J	240	1	39.6			B2	B2S1	60 lbs
●	QX-254-F0340953N	277	1	34.3			B2	B2S1	60 lbs
●	QX-254-F0340953I	347	1	27.4			B2	B2S1	60 lbs
●	QX-254-F0340953U	480	3	11.4			B2	B2S1	60 lbs
●	QX-254-F0340953Z	600	3	9.1			B2	B2S1	60 lbs

SKU Legend: ◆ **= Popular Products** ● **= Extended Offering** ■ **= Made to Order** (Contact your local Marley Sales Representative for typically associated lead times)
Convectors are 60/50 Hz rated *Thermostat only is load carrying or remote. **Without controls.

EXPLOSION PROOF SERIES
Convection Air Heater

Class I, Divisions 1 & 2, Groups B, C & D
Class I, Zones 1 & 2 Groups IIB + H2
Ignition Temperature Code T3A, 356° F (180°C)

Models & Specifications:

ITEM INFORMATION		ELECTRICAL DATA				UNIT SIZE	OPTIONAL BUILT-ON CONTROLS		SHIP WT.**
	CATALOG NO.	VOLTS	PHASE	TOTAL AMPS	KW		CONTROLS ONLY	THERMOSTAT ONLY* OR THERMOSTAT WITH CONTROLS	
●	QX-254-F0610052B	120	1	4.2	0.5	1	—	1024754	13 lbs
●	QX-254-F0610052C	208	1	2.4			—	1024754	13 lbs
●	QX-254-F0610052J	240	1	2.1			—	1024754	13 lbs
●	QX-254-F0610052N	277	1	1.8			—	1024754	13 lbs
●	QX-254-F0620142B	120	1	11.7	1.4	2	Not Required	S2	27 lbs
●	QX-254-F0620142C	208	1	6.7			Not Required	S2	27 lbs
●	QX-254-F0620142J	240	1	5.8			Not Required	S2	27 lbs
●	QX-254-F0620142N	277	1	5.1			Not Required	S2	27 lbs
●	QX-254-F0620142I	347	1	4.0			B2	B3	27 lbs
●	QX-254-F0630232B	120	1	19.2	2.3	3	Not Required	S2	36 lbs
●	QX-254-F0630232C	208	1	11.1			Not Required	S2	36 lbs
●	QX-254-F0630232D	208	3	6.4			B2	B3	36 lbs
●	QX-254-F0630232J	240	1	9.6			Not Required	S2	36 lbs
●	QX-254-F0630232N	277	1	8.3			Not Required	S2	36 lbs
●	QX-254-F0630232I	347	1	6.6			B2	B3	36 lbs
●	QX-254-F0630232U	480	3	2.8			B2	B3	36 lbs
●	QX-254-F0630232Z	600	3	2.2			B2	B3	36 lbs
●	QX-254-F0640322C	208	1	15.4	3.2	4	Not Required	S2	60 lbs
●	QX-254-F0640322D	208	3	8.9			B2	B3	60 lbs
●	QX-254-F0640322J	240	1	13.3			Not Required	S2	60 lbs
●	QX-254-F0640322N	277	1	11.6			Not Required	S2	60 lbs
●	QX-254-F0640322I	347	1	9.2			B2	B3	60 lbs
●	QX-254-F0640322U	480	3	3.8			B2	B3	60 lbs
●	QX-254-F0640322Z	600	3	3.1			B2	B3	60 lbs
●	QX-254-F0640502D	208	3	13.9	5.0	4	B2	B3	60 lbs
●	QX-254-F0640502J	240	1	20.8			Not Required	S2	60 lbs
●	QX-254-F0640502N	277	1	18.1			Not Required	S2	60 lbs
●	QX-254-F0640502I	347	1	14.4			B2	B3	60 lbs
●	QX-254-F0640502U	480	3	6.0			B2	B3	60 lbs
●	QX-254-F0640502Z	600	3	4.8			B2	B3	60 lbs

SKU Legend: ◆ = **Popular Products** ● = **Extended Offering** ■ = **Made to Order** (Contact your local Marley Sales Representative for typically associated lead times)
Convectors are 60/50 Hz rated *Thermostat only is load carrying or remote. **Without controls.

EXPLOSION PROOF SERIES
Convection Air Heater

Class I, Divisions 1 & 2, Groups C & D
Class I, Zones 1 & 2 Groups IIB
Ignition Temperature Code T3A, 356° F (180°C)

Models & Specifications:

ITEM INFORMATION		ELECTRICAL DATA				UNIT SIZE	OPTIONAL BUILT-ON CONTROLS		SHIP WT.**
	CATALOG NO.	VOLTS	PHASE	TOTAL AMPS	KW		CONTROLS ONLY	THERMOSTAT ONLY* OR THERMOSTAT WITH CONTROLS	
●	QX-254-F0610053B	120	1	4.2	0.5	1	—	1007002	13 lbs
●	QX-254-F0610053C	208	1	2.4			—	1007002	13 lbs
●	QX-254-F0610053J	240	1	2.1			—	1007002	13 lbs
●	QX-254-F0610053N	277	1	1.8			—	1007002	13 lbs
●	QX-254-F0620143B	120	1	11.7	1.4	2	Not Required	S1	27 lbs
●	QX-254-F0620143C	208	1	6.7			Not Required	S1	27 lbs
●	QX-254-F0620143J	240	1	5.8			Not Required	S1	27 lbs
●	QX-254-F0620143N	277	1	5.1			Not Required	S1	27 lbs
●	QX-254-F0620143I	347	1	4.0			B2	B2S1	27 lbs
●	QX-254-F0630233B	120	1	19.2	2.3	3	Not Required	S1	36 lbs
●	QX-254-F0630233C	208	1	11.1			Not Required	S1	36 lbs
●	QX-254-F0630233D	208	3	6.4			B2	B2S1	36 lbs
●	QX-254-F0630233J	240	1	9.6			Not Required	S1	36 lbs
●	QX-254-F0630233N	277	1	8.3			Not Required	S1	36 lbs
●	QX-254-F0630233I	347	1	6.6			B2	B2S1	36 lbs
●	QX-254-F0630233U	480	3	2.8			B2	B2S1	36 lbs
●	QX-254-F0630233Z	600	3	2.2			B2	B2S1	36 lbs
●	QX-254-F0640323C	208	1	15.4	3.2	4	Not Required	S1	60 lbs
●	QX-254-F0640323D	208	3	8.9			B2	B2S1	60 lbs
●	QX-254-F0640323J	240	1	13.3			Not Required	S1	60 lbs
●	QX-254-F0640323N	277	1	11.6			Not Required	S1	60 lbs
●	QX-254-F0640323I	347	1	9.2			B2	B2S1	60 lbs
●	QX-254-F0640323U	480	3	3.8			B2	B2S1	60 lbs
●	QX-254-F0640323Z	600	3	3.1			B2	B2S1	60 lbs
●	QX-254-F0640503D	208	3	13.9	5.0	4	B2	B2S1	60 lbs
●	QX-254-F0640503J	240	1	20.8			Not Required	S1	60 lbs
●	QX-254-F0640503N	277	1	18.1			Not Required	S1	60 lbs
●	QX-254-F0640503I	347	1	14.4			B2	B2S1	60 lbs
●	QX-254-F0640503U	480	3	6.0			B2	B2S1	60 lbs
●	QX-254-F0640503Z	600	3	4.8			B2	B2S1	60 lbs

SKU Legend: ◆ = **Popular Products** ● = **Extended Offering** ■ = **Made to Order** (Contact your local Marley Sales Representative for typically associated lead times)
Convectors are 60/50 Hz rated *Thermostat only is load carrying or remote. **Without controls.

EXPLOSION PROOF SERIES
Convection Air Heater

Class I, Divisions 1 & 2, Groups B, C & D
Class II, Divisions 1 & 2, Groups E, F & G
Ignition Temperature Code T3C, 320° F (160°C)

Models & Specifications:

ITEM INFORMATION		ELECTRICAL DATA				UNIT SIZE	OPTIONAL BUILT-ON CONTROLS		SHIP WT.**
	CATALOG NO.	VOLTS	PHASE	TOTAL AMPS	KW		CONTROLS ONLY	THERMOSTAT ONLY* OR THERMOSTAT WITH CONTROLS	
●	QX-254-F0810054B	120	1	4.2	0.5	1	—	1007002	13 lbs
●	QX-254-F0810054C	208	1	2.4			—	1007002	13 lbs
●	QX-254-F0810054J	240	1	2.1			—	1007002	13 lbs
●	QX-254-F0810054N	277	1	1.8			—	1007002	13 lbs
●	QX-254-F0820104B	120	1	8.3	1.0	2	Not Required	S1	27 lbs
●	QX-254-F0820104C	208	1	4.8			Not Required	S1	27 lbs
●	QX-254-F0820104J	240	1	4.2			Not Required	S1	27 lbs
●	QX-254-F0820104N	277	1	3.6			Not Required	S1	27 lbs
●	QX-254-F0820104I	347	1	2.9			B2	B2S1	27 lbs
●	QX-254-F0830174B	120	1	14.2	1.7	3	Not Required	S1	36 lbs
●	QX-254-F0830174C	208	1	8.2			Not Required	S1	36 lbs
●	QX-254-F0830174D	208	3	4.7			B2	B2S1	36 lbs
●	QX-254-F0830174J	240	1	7.1			Not Required	S1	36 lbs
●	QX-254-F0830174N	277	1	6.1			Not Required	S1	36 lbs
●	QX-254-F0830174I	347	1	4.9			B2	B2S1	36 lbs
●	QX-254-F0830174U	480	3	2			B2	B2S1	36 lbs
●	QX-254-F0830174Z	600	3	1.6			B2	B2S1	36 lbs
●	QX-254-F0840324C	208	1	15.4	3.2	4	Not Required	S1	36 lbs
●	QX-254-F0840324D	208	3	8.9			B2	B2S1	60 lbs
●	QX-254-F0840324J	240	1	13.3			Not Required	S1	60 lbs
●	QX-254-F0840324N	277	1	11.6			Not Required	S1	60 lbs
●	QX-254-F0840324I	347	1	9.2			B2	B2S1	60 lbs
●	QX-254-F0840324U	480	3	3.8			B2	B2S1	60 lbs
●	QX-254-F0840324Z	600	3	3.1			B2	B2S1	60 lbs

SKU Legend: ◆ **= Popular Products** ● **= Extended Offering** ■ **= Made to Order** (Contact your local Marley Sales Representative for typically associated lead times)
Convectors are 60/50 Hz rated *Thermostat only is load carrying or remote. **Without controls.

Dimensions and Clearances:

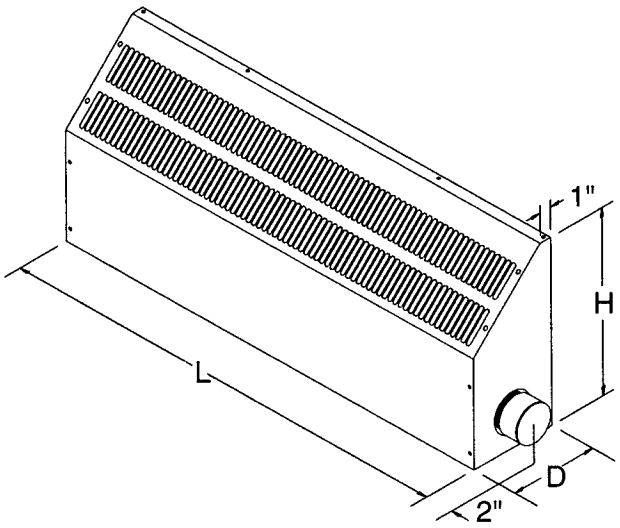

SIZE	L	H	D
1	26″	6″	4 ½
2	26″	16″	8
3	39″	16″	8
4	67 ½″	16″	8

EXPLOSION PROOF SERIES
Convection Air Heater

Scan the QR code to access additional specs and features

Electrical Package Options:

All single-phase heaters rated over 22 amps or 277 volts and all three-phase heaters require a magnetic contactor. Some electrical combinations will also require a control transformer. To simplify field installation, these accessories are factory-mounted on the heater cabinet and factory pre-wired (not available on Size 1 convectors).

CATALOG NO.	OPTION	DESCRIPTION
B2	Electric Control Option* (without thermostat)	Classes I and II, Groups B, C, E, D, F and G includes contactor and transformer (as required). Required for all three-phase and singlephase heaters over 22 amps or 277 volts
B2S1	Thermostat & Controls*	Classes I and II, Groups C, D, E, F and G includes thermostat, contactor and transformer (as required).
B3	Thermostat & Controls (Group B)*	Classes I and II, Groups B, C, D, E, F and G includes thermostat, contactor and transformer (as required). Thermostat has internal set point.
S1	Thermostat Only*	Classes I and II, Groups C, D, E, F and G single-phase heaters rated up to 22 amps at 120-277 volts. Use remote room thermostat Catalog Number 1007002 for Size 1 convectors.
S2	Thermostat Only (Group B)*	Classes I and II, Groups B, C, D, E, F and G single-phase heaters rated up to 22 amps at 120-277 volts. Thermostat has internal set point. Use remote room thermostat Catalog Number 1024754 for Size 1 convectors.

*Not available on Size 1 Convectors.

Accessory Remote Thermostats:

CATALOG NO.	SWITCH TYPE	TYPE	RATING	TEMP RANGE	DESCRIPTION
1007002	Bimetal	SPDT	125-277V, 22A	50°–90°F (10°–32°C)	Class 1, Div. 1, Groups C & D Class II, Div. 1, Groups E, F, & G
QX-1024754	Bulb and Capillary with Internal Set Point Adjustment	SPDT	120-240V, 25A 277V, 22A	40°–120°F (5°–49°C)	Class 1, Div. 1, Groups B, C & D Class II, Div. 1, Groups E, F, & G
QX-1025396		SPST			Corrosion-Resistant Class 1, Div. 1, Groups B, C, & D Class II, Div. 1, Groups E, F & G

Thermostat Options:

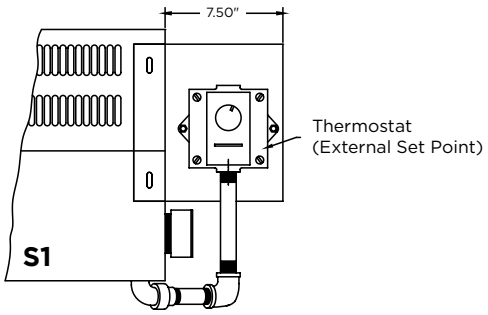

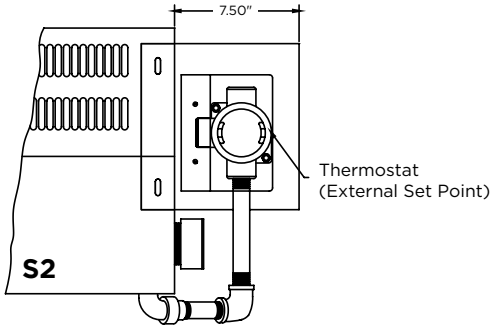

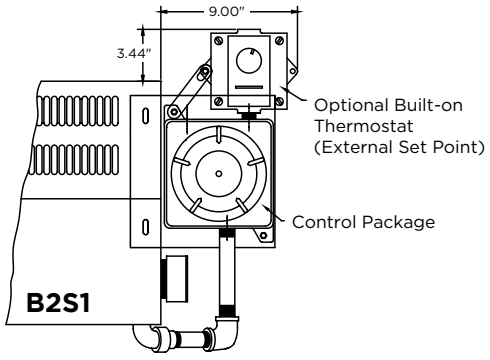

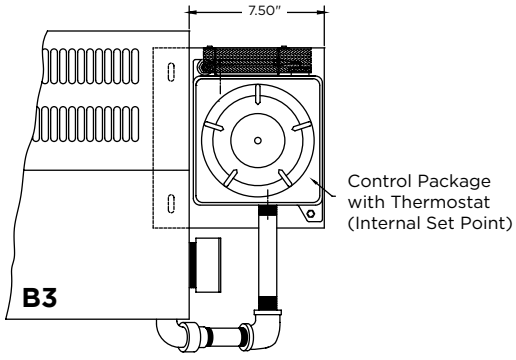

S1 & **B2S1**, rated for
Class I, Groups C & D | Class II, Groups E, F, & G

S2 & **B3**, rated for
Class I, Groups B, C & D | Class II, Groups E, F, & G