Marley
Engineered Products

ECP Series
Wall Convector

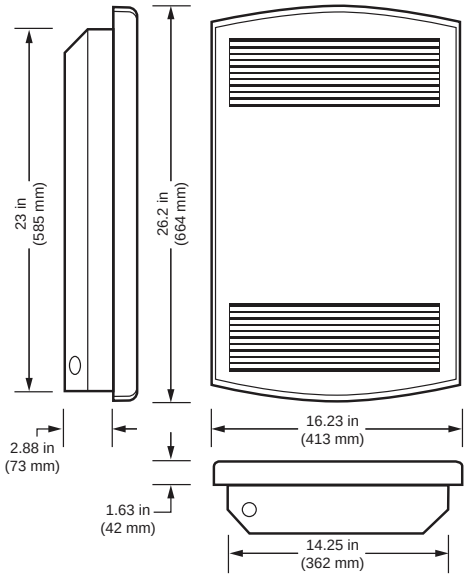

C US
203845

Installation & Maintenance Instructions

Dear Owner,

Congratulations! Thank you for purchasing this new heater manufactured by Marley Engineered Products. You have made a wise investment selecting the highest quality product in the heating industry. Please carefully read the installation and maintenance directions shown in this manual. You should enjoy years of efficient heating comfort with this product from Marley Engineered Products... the industry's leader in design, manufacturing, quality and service.

... The Employees of
Marley Engineered Products

⚠ WARNING ⚠

Read Carefully - These instructions are written to help you prevent difficulties that might arise during installation of heaters. Studying the instructions first may save you considerable time and money later. Observe the following procedures and cut your installation time to a minimum. **To reduce risk of fire or electric shock:**

1. Disconnect all power coming to heater at main service panel before wiring or servicing.
2. All wiring must be in accordance with the National and Local Electrical Codes and the heater must be grounded as a precaution against possible electric shock.
3. Verify the power supply voltage coming to heater matches the ratings printed on the heater nameplate before energizing.
4. This heater is hot when in use. To avoid burns, do not let bare skin touch hot surfaces.
5. Do not insert or allow foreign objects to enter any ventilation or exhaust opening as this may cause an electric shock, fire, or damage to the heater.
6. To prevent a possible fire, do not block air intakes or exhaust in any manner. Keep combustible materials, such as crates, drapes, etc., away from heater. Do not install behind doors, furniture, towels, or boxes.
7. A heater has hot and arcing (sparking) parts inside. Do not use it in areas where gasoline, paint, or flammable liquids are used or stored.
8. Use this heater only as described in this manual. Any other uses not recommended by the manufacturer may cause fire, electric shock, or injury to persons.
9. This heater is not approved for use in corrosive atmospheres such as marine, green house, or chemical storage areas.

SAVE THESE INSTRUCTIONS

⚠ WARNING ⚠

TO REDUCE RISK OF FIRE OR ELECTRICAL SHOCK:

1. DO NOT INSTALL HEATER UPSIDE DOWN OR SIDEWAYS.
2. DO NOT USE HEATER WITHOUT GRILLE.
3. FOR WALL MOUNTING ONLY. **DO NOT** INSTALL HEATER CLOSER THAN 3" (76 mm) TO THE FLOOR OR 12" (305 mm) TO ANY ADJACENT WALL SURFACE. **DO NOT** INSTALL CLOSER THAN 18" (458 mm) TO THE CEILING.

Installation of Back Box Recessed in Wall in New Construction

1. Mounting Back Box (See Figure 1).
   a. Remove heater assembly from back box by removing the four mounting screws on the sides.
   b. Place the back box between two 16" (406 mm) center-to-center wall studs at the desired mounting height but no closer than 3" (76 mm) to floor or 12" (305 mm) to adjacent wall and 18" (458 mm) to the ceiling. Any floor molding larger than 4" (102 mm) will interfere with mounting so additional floor clearance will be required.
   c. Remove the four small white hole caps on the sides of the back box.
   d. Adjust back box such that the top, bottom, and sides will be flush with the finished wall surface. Secure the back box in position with wood screws or nails as shown in Figure 1.

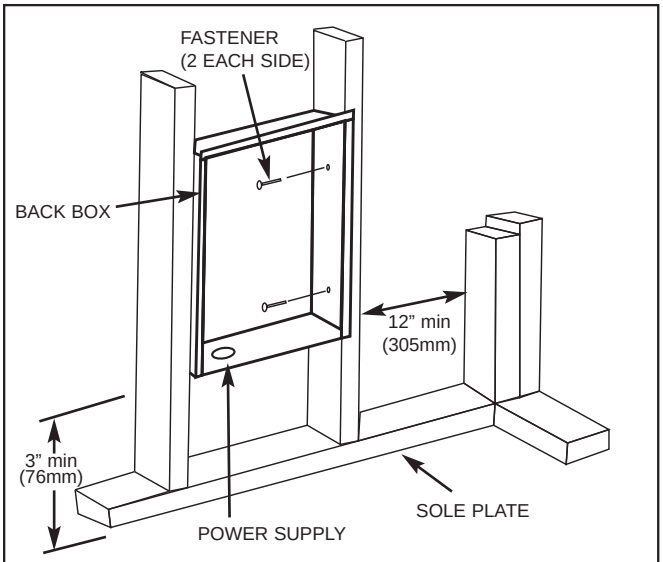

Fig. 1: Locating Back Box Recessed in New Construction

2. Power Supply Wiring (See Figure 1).
   NOTE: Wire Compartment Volume – 24 in^3 (386 cm^3)
   a. Remove the wiring compartment cover located in the lower left corner of the back box.
   b. Run a power supply cable into the area of the knock-out in the bottom left hand corner of the back box. All wiring must be in accordance with national and local electrical codes. Refer to Table 1 for correct wire size.
   c. Remove the knockout in the bottom left corner of the back box and install a cable clamp. Insert power supply cable through cable clamp, allowing at least 6" (152 mm) of leads to extend inside the back box.
   d. Ground the back box by connecting the supply ground leadwire to the green ground screw located inside the lower left corner of the back box. Connect the two leadwires on the socket connector attached to the wiring cover assembly to the power supply leads using approved connectors.
   e. Gently push wiring into the wiring compartment and attach wiring compartment cover to back box. Make sure wiring is not protruding or being pinched between the wiring compartment cover and the back box.

Recessed Installation of Back box in Existing Construction

1. Provide a wall opening 14-1/2" (362mm) wide by 23-3/8" (594mm) high at the desired mounting height, but no closer than 3" (76mm) from floor and 12" (305mm) adjacent walls (See Figure 2) and 18" (458mm) to the ceiling.

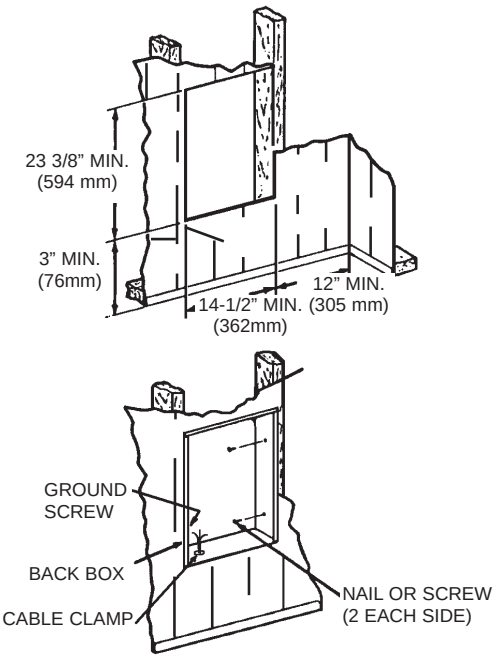

Fig. 2: Locating Back Box Recessed in Existing Construction

2. Power Supply Wiring
   NOTE: Wire Compartment Volume – 24 in^3 (386 cm^3)
   a. Run a power supply cable inside the wall to the area below the bottom left corner of the wall opening. All wiring must be in accordance with national and local electrical codes. Refer to Table 1 for correct wire size.
   b. Remove heater assembly from back box by removing the four mounting screws on the sides.
   c. Remove the wiring compartment cover located in the lower left corner of the back box.
   d. Remove the knockout in the bottom left corner of the back box and install a cable clamp. Insert power supply cable through cable clamp, allowing at least 6" (152 mm) of leads to extend inside the back box.
   e. Ground the back box by connecting the supply ground leadwire to the green ground screw located inside the lower left corner of the back box. Connect the two leadwires on the socket connector attached to the wiring cover assembly to the power supply leads using approved connectors.
   f. Gently push wiring into the wiring compartment and attach wiring compartment cover to back box. Make sure wiring is not protruding or being pinched between the wiring compartment cover and the back box.
3. Mounting Back Box
   a. Remove the four small white hole caps on the sides of the back box.
   b. Adjust back box such that the top, bottom, and sides will be flush with the finished wall surface. Secure the back box in position with wood screws or nails.

TABLE 1

MODEL	WATTS	VOLTS	AMPS	WIRE SIZE
ECP1024	1000W / 750W	240 / 208	4.2 / 3.6	14AWG
ECP1524	1500W / 1125W	240 / 208	6.3 / 5.4	14AWG

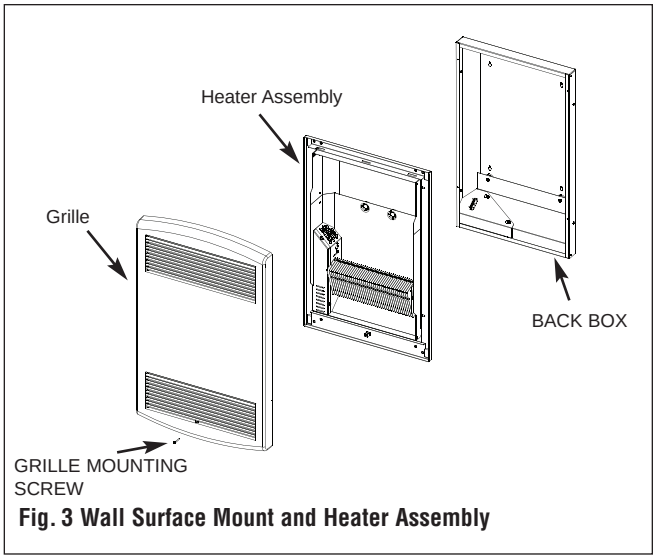

Fig. 3 Wall Surface Mount and Heater Assembly

(Optional)
Wall Surface Mounting Frame
(See Figure 3).

1. Remove heater assembly from back box by removing the four mounting screws on the sides.
2. Secure back box to wall with knockouts in lower left corner using screws and anchors. Back box should be mounted no closer than 3" (76 mm) from floor, 12" (305 mm) to adjacent walls and 18" (458 mm) to the ceiling. **NOTE:** If heater is located in a high traffic area where it may be subjected to vandalism or abuse, take extreme care to see that the box is firmly attached to the wall.
3. Power Supply Wiring
   NOTE: Wire Compartment Volume – 24 in^3 (386 cm^3)
   a. Run a power supply cable into the area of the lower left corner of the surface mounted back box. All wiring into the heater must be from the bottom or side of the surface mounted back box. Do not route field wiring into the back of the surface mounted back box. All wiring must be in accordance with national and local electrical codes. Refer to Table 1 for correct wire size.
   b. Remove the wiring compartment cover located in the lower left corner of the back box.
   c. Remove the selected knockout in the bottom left corner or side of the back box. Insert properly protected power supply cable into the heater allowing at least 6" (152 mm) of leads to extend inside the back box.
   d. Ground the back box by connecting the supply ground leadwire to the green ground screw located inside the lower left corner of the back box. Connect the two leadwires on the socket connector attached to the wiring cover assembly to the power supply leads using approved connectors.
   e. Gently push wiring into the wiring compartment and attach wiring compartment cover to back box. Make sure wiring is not protruding or being pinched between the wiring compartment cover and the back box.

Installation of Heater Assembly and Grille

After back box is completely installed and wired and no further construction dirt is expected, clean debris from back box.

1. Plug heater assembly into mating socket in back box wiring cover. The plug and socket are "position sensitive" so care should be taken regarding orientation. Attach heater assembly to back box using the four screws used during removal.
2. Mount front grille by aligning the two grille tabs with the top slots in the heater frame assembly. Attach the bottom of the grille to the heater frame assembly using the screw provided (taped to the front bottom of the heater frame.)

WIRING DIAGRAM

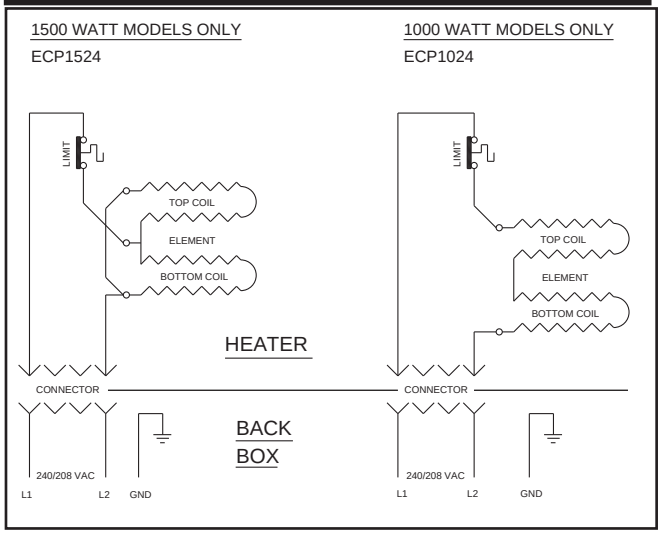

NOTE: Field wiring to heater is through line voltage thermostat (supplied by others).

Operation

The heater is intended to be turned on and off by a remote line voltage thermostat or some other controlling means suitable for interrupting power to the heater.

1. Turn power to heater on at main switch panel. Turn remote line voltage thermostat to demand heat. This should energize the heating elements causing convective heated air to flow from the air discharge grille on the top face of the grille. This may take a minute to be noticeable and will increase in temperature with time.
2. After the discharge air has become warm and room conditions become comfortable, adjust the remote wall thermostat to the desired position to obtain room comfort.

IMPORTANT INFORMATION
Cleaning and Maintenance

The heater should be cleaned annually to remove dust and other foreign material that has collected during the heating season. This is a simple operation when performed as follows:

1. Turn off the electric power at main line switch (or remove all fuses) to disconnect electric power to the heater. **THIS IS IMPORTANT.**
2. Remove the grille (Figure 4).
3. With a vacuum cleaner nozzle or dust cloth, remove dust and other foreign material from the heater and grille.
4. After cleaning, reinstall the grille.
5. Turn on the main line switch (or replace fuses) to restore power to the heater. The heater is now ready for another season of operation.
6. The exterior surfaces should be wiped down with clean damp cloth. Avoid using harsh solvents and products leaving oil or wax residue.

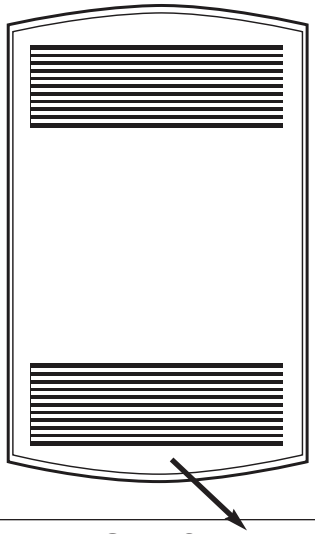

MODEL NO. **ECP1524**
ELECTRIC AIR HEATER

DATE CODE:

VOLTS AC	60 HZ	AMPS	WATTS
240		12.5	1500

FOR USE WITH BACK BOX MODEL ECPBB UTILISER AVEC COFFRET

C SA US
203845

US Patent 6,132,310
OTHER PATENTS PENDING
4104-2325-008

MARLEY ENGINEERED PRODUCTS
BENNETTSVILLE, SC 29512 USA

LIMITED WARRANTY

All products manufactured by Marley Engineered Products are warranted against defects in workmanship and materials for one year from date of installation, except heating elements which are warranted against defects in workmanship and materials for five years from date of installation. This warranty does not apply to damage from accident, misuse, or alteration; nor where the connected voltage is more than 5% above the nameplate voltage; nor to equipment improperly installed or wired or maintained in violation of the product's installation instructions. All claims for warranty work must be accompanied by proof of the date of installation.

The customer shall be responsible for all costs incurred in the removal or reinstallation of products, including labor costs, and shipping costs incurred to return products to Marley Engineered Products Service Center. Within the limitations of this warranty, inoperative units should be returned to the nearest Marley authorized service center or the Marley Engineered Products Center, and we will repair or replace, at our option, at no charge to you with return freight paid by Marley. It is agreed that such repair or replacement is the exclusive remedy available from Marley Engineered Products.

THE ABOVE WARRANTIES ARE IN LIEU OF ALL OTHER WARRANTIES EXPRESSED OR IMPLIED, AND ALL IMPLIED WARRANTIES OF MERCHANTABILITY AND FITNESS FOR A PARTICULAR PURPOSE WHICH EXCEED THE AFORESAID EXPRESSED WARRANTIES ARE HEREBY DISCLAIMED AND EXCLUDED FROM THIS AGREEMENT. MARLEY ENGINEERED PRODUCTS SHALL NOT BE LIABLE FOR CONSEQUENTIAL DAMAGES ARISING WITH RESPECT TO THE PRODUCT, WHETHER BASED UPON NEGLIGENCE, TORT, STRICT LIABILITY, OR CONTRACT.

Some states do not allow the exclusion or limitation of incidental or consequential damages, so the above exclusion or limitation may not apply to you. This warranty gives you specific legal rights, and you may also have other rights which vary from state to state.

For the address of your nearest authorized service center, contact Marley Engineered Products in Bennettsville, SC, at 1-800-642-4328. Merchandise returned to the factory must be accompanied by a return authorization and service identification tag, both available from Marley Engineered Products. When requesting return authorization, include all catalog numbers shown on the products.

Marley
Engineered Products

470 Beauty Spot Rd. East
Bennettsville, SC 29512 USA

ECR 37240

Part No. 5200-2636-001 5/07