2500 SERIES
Electric Baseboard Heater





Ideal Spaces:

Bedrooms
Living/Family Room
Kitchens
Basements
Offices
Conference Rooms
Lobbies
Waiting Rooms
Bathrooms

White

Beige

- Ideal for basic, zoned Primary/Secondary heating
- Low Profile perfect for limited wall space
- Convection heat minimizes air flow, reducing flow of bacteria and dust
- Instant heat at call of thermostat
- Durable, textured, powder coat finish retains attractive appearance with all interior decors
- Chimney fin element designed for maximum air circulation
- Air flow directed away from walls to help prevent wall streaking
- Lead wires and knockouts allow quick field connection from either end
- Pre-notched marks for mounting guide
- Built-in cable clamp in both large wiring compartments
- UL-listed for installation on wall at floor level with wall-to-wall carpeting
- High temperature safety limit for added protection in case of airflow blockage

c UL us

10 YEAR WARRANTY ELEMENT

1 YEAR WARRANTY WORKMANSHIP

QMARK
A Marley Engineered Products Brand

2500 SERIES
Electric Baseboard Heater

Models & Specifications:

	ITEM INFORMATION		ELECTRICAL DATA			DIMENSIONAL DATA	
	CATALOG NO.	UPC	VOLTS	WATTS	AMPS	LENGTH	SHIP WT.
◆	2512NW	098319730008	120	400	3.4	24″	5.2 lbs
◆	2542NW	098319730022	240/208	400/300	1.7/1.5	24″	5.2 lbs
◆	2513NW	098319730084	120	750	6.3	36″	7.5 lbs
◆	2543NW*	098319730107	240/208	750/564	3.2/2.8	36″	7.5 lbs
◆	2514NW	098319730121	120	1000	8.4	48″	10 lbs
◆	2544NW*	098319730145	240/208	1000/752	4.2/3.7	48″	10 lbs
◆	2574NW	098319730152	277/240/208	1000/752/564	3.7/3.2/2.8	48″	10 lbs
◆	2545NW*	098319730183	240/208	1250/940	5.2/4.6	60″	11.5 lbs
◆	2516NW	098319730206	120	1500	12.6	72″	14 lbs
◆	2546NW*	098319730220	240/208	1500/1128	6.3/5.5	72″	14 lbs
◆	2576NW	098319730237	277/240/208	1500/1128/846	5.5/4.7/4.1	72″	14 lbs
◆	2548NW*	098319730251	240/208	2000/1504	8.4/7.3	96″	18.5 lbs
●	2502NW	098319730015	208	400	2	24″	5.2 lbs
●	2572NW	098319730039	277/240/208	400/300/225	1.5/1.3/1.1	24″	5.2 lbs
●	25126NW	098319730046	120	500	4.2	30″	6.3 lbs
●	25026NW	098319730053	208	500	2.4	30″	6.3 lbs
●	25426NW	098319730060	240/208	500/376	2.1/1.9	30″	6.3 lbs
●	25726NW	098319730077	277/240/208	500/376/282	1.8/1.6/1.4	30″	6.3 lbs
●	2503NW	098319730091	208	750	3.6	36″	7.5 lbs
●	2573NW	098319730114	277/240/208	750/564/423	2.7/2.4/2.1	36″	7.5 lbs
●	2504NW	098319730138	208	1000	4.8	48″	10 lbs
●	2515NW	098319730169	120	1250	10.5	60″	11.5 lbs
●	2505NW	098319730176	208	1250	6	60″	11.5 lbs
●	2575NW	098319730190	277/240/208	1250/940/705	4.6/4.0/3.4	60″	11.5 lbs
●	2506NW	098319730021	208	1500	7.3	72″	14 lbs
●	25008NW	098319729811	208	2500	12	96″	18.5 lbs
●	2508NW	098319730244	208	2000	9.7	96″	18.5 lbs
●	25408NW	098319729828	240/208	2500/1880	10.5/9.1	96″	18.5 lbs
●	2578NW	098319730268	277/240/208	2000/1504/1128	7.3/6.3/5.5	96″	18.5 lbs
●	25708NW	098319729835	277/240/208	2500/1880/1410	9.1/7.9/6.8	96″	18.5 lbs

SKU Legend: ◆ **= Popular Products;** ● **= Extended Offering** (Contact your local Marley Sales Representative for typically associated lead times)

NOTE: Unit and accessories represent White finish. For Beige, remove N suffx to catalog number (ex. 2544W). Availability for the Beige skus is the exact same as it is for the White sku (ex. 25708W = Extending offering) For high-altitude baseboard heater (mounted above 7,500 ft.), add suffx "H" to catalog number. 8 ft. length baseboards must be ordered in multiples of two pieces for shipment.

*Available in pallet quantities.

Dimensions and Clearances:

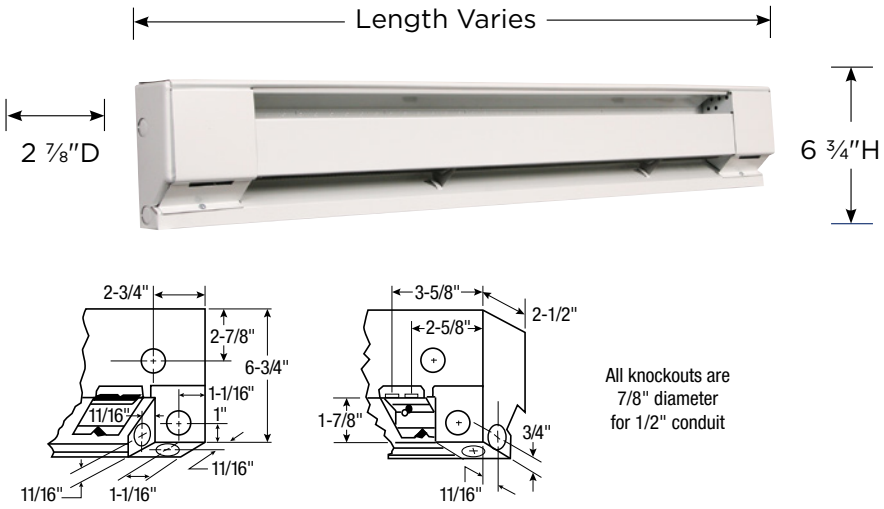

Suggested Controls



TH114A240DBA MS26 or M601W

2500 SERIES
Electric Baseboard Heater

Scan the QR code to access additional specs and features

Filler Sections:

CATALOG NO.	UPC	DESCRIPTION	SHIP WT.
FS12NW	685360185989	1 ft. Filler Section	2 lbs
FS24NW	685360010960	2 ft. Filler Section	4 lbs
FS36NW	685360010984	3 ft. Filler Section	6 lbs
FS48NW	685360061702	4 ft. Filler Section	8 lbs
FSJ2NW	685360010922	2 in. Joiner Strip	0.5 lbs

Blank Sections:

CATALOG NO.	UPC	DESCRIPTION	SHIP WT.
QMKCBDA2NW	685360059594	2.6 ft. Blank Section, Beige	4 lbs
QMKCBDA3NW	685360059617	3 ft. Blank Section, Beige	5 lbs
QMKCBDA4NW	685360059631	4 ft. Blank Section, Beige	7 lbs
QMKCBDA5NW	685360059655	5 ft. Blank Section, Beige	9 lbs
QMKCBDA6NW	685360059679	6 ft. Blank Section, Beige	11 lbs
OMKCBDABNW	685360059693	8 ft. Blank Section, Beige	14 lbs

Optional Controls & Accessories:

CATALOG NO.	UPC	DESCRIPTION	SHIP WT.
TA1ANW	098319730411	SP Thermostat, rated 22A @ 120–277V	1 lbs
TA1TPANW	098319730428	Tamper-Resistant Version of TA1AW	1 lbs
TA2ANW	098319730435	DP Thermostat, rated 22A @ 120–277V	1 lbs
TA2TPANW	098319730442	Tamper-Resistant Version of TA2AW	1 lbs
HCA2415/20NW	098319730466	240V Load Transfer Switch, 20A	1 lbs
HCA1215/20NW	098319730459	120V Load Transfer Switch, 20A	1 lbs
RSA1224	098319714800	120V/24V Transformer Relay, 22A	1 lbs
RSA2024	098319714855	208V/24V Transformer Relay, 22A	1 lbs
RSA2424	098319714909	240V/24V Transformer Relay, 22A	1 lbs
RSA2724	098319714954	277V/24V Transformer Relay, 19A	1 lbs
RA1NW	098319730473	120V Duplex Receptacle	1 lbs
DSW2NW	098319730497	Double-Pole Power On/Off Switch rated 20A @ 120–277V	1 lbs
PR24	098319713674	Single-Pole Power Relay, 24VControl rated 30A @ 120–240V, 23A @ 277V	1 lbs
PR120	098319713681	Same as PR24 except with 120V Control	1 lbs
ICANW	098319730503	Inside Corner	1 lbs
RA1COMPNW	098319730480	Duplex Receptacle Cover only — carton of 10	1 lbs

NOTE: Unit and accessories represent White finish. For Beige, remove N suffix to catalog number (ex. 2544W)

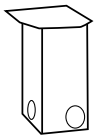

Inside Corner Section

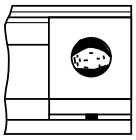

TA1A, TA2A

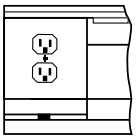

RA1



HCA

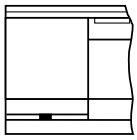

RSA

Unit length varies with model. See Selection Chart