470 Beauty Spot Rd. E
Bennettsville, SC 29512

SUBMITTAL SHEET
CU900 SERIES
CUSTOM CABINET UNIT HEATERS

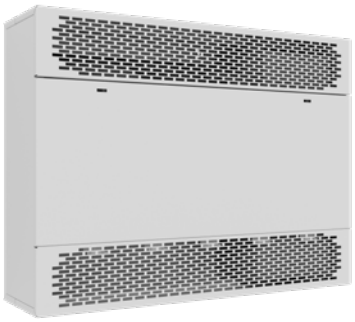

CAPACITIES
2–32 KW
208, 240, 277, 347, 380, 480 or 600V
1 or 3 Phase
Temperature Range: 55°–85° F
Air Movement: 500–2000 CFM

See Selection Chart for all Options

JOB NAME: _____

LOCATION: _____

ARCHITECT: _____

ENGINEER: _____

CONTRACTOR: _____

SUBMITTED BY: _____ DATE: _____

TAG/ITEM	QTY.	CATALOG NUMBER	HEATER			AMPS	AIR FLOW CONFIGURATION	MOUNTING LOCATION
			KW	VOLTS	Ø			

ACCESSORIES AND CONTROLS	TAG/ITEM	QTY.	CATALOG NUMBER	DESCRIPTION

SUBMITTED BY:	DATE

APPROVED BY:	DATE

CU900 SERIES

ARCHITECT'S AND ENGINEER'S SPECIFICATIONS*

The electric cabinet unit heaters shall be as manufactured by QMark,® a Marley Engineered Products® Brand. Heaters shall be UL/cUL Listed, designed for mounting in any position, including on-end, fully recessed, semi-recessed or surface mounted. All capacities, voltages, physical sizes should be as specified in the heater schedule. All three phase heaters shall have a balanced heating load. Control voltage is to be internally generated by 24 VAC (Optional 120 VAC).

CABINET: The cabinet shall be of heavy duty cold-rolled steel. The heater front covers shall be securely attached to the cabinet with a maximum of two slotted head style spring latches (optional Toolhead Key Lock) and easily removable for access to elements, filters and control panel. Cabinet shall be finished in Beige (Optional - Color by Architect) polyester powder coated.

HEATING ELEMENTS: The heating elements shall be warranted for five years and shall be of non-glowing design consisting of 80/20 NiChi resistance wire enclosed in a steel sheath to which steel plate fins are brazed. The heating element shall be located directly in front of the blower discharge air for uniform heating.

SAFETY THERMAL CUTOUTS: Thermal safety cutouts shall be built into the system to automatically shut off heater in event of overheating due to any cause. The safety cutouts shall directly interrupt power to the elements and not depend on relays to interrupt the power. (Optional backup manual reset thermal safety cutout in the control circuit shall prevent heater reenergizing until cause of overheating has been cleared by a qualified service technician).

MOTOR AND BLOWER ASSEMBLY: The motor(s) and blower(s) shall be direct drive and resiliently mounted on a rigid heavy duty frame for quiet operation and long life. The motor(s) shall be two speed ⅛ H.P. with automatic reset overload protection. The motor shall be vented and mounted in the air stream to provide maximum cooling of the motor(s). Motor(s) fuse protection shall be provided to meet UL, cUL and NEC requirements. The blower(s) shall be forward curved, double inlet, centrifugal type with discharge directly on the full length of the elements to provide uniform discharge air temperatures.

AIR FILTERS: The filter shall be located ahead of the motor and blower assembly to ensure clean air circulation. The filter shall filter both the returning room or the outside air if the optional outside air damper assembly is provided. Filter shall be easily removed for changing or cleaning by removing the front panel and pulling on the filter. A disposable filter is standard and a permanent washable filter is optional.

FRONT COVER INTERLOCK: Heater shall be provided with an electrical interlock to shut down the heater when the front cover is opened to provide safety to the maintenance personnel during filter cleaning (replacement) or other maintenance.

FAN DELAY CONTROL: Fan control shall delay start up of the fan motor(s) until the heating elements have warmed up. It shall maintain motor operation after heating elements have been de-energized to dissipate residual heat.

TEMPERATURE CONTROL: Thermostat shall be built-in, snap-action single stage with remote bulb sensor located in the return air stream. (Optional - built-in two stage remote bulb snap action thermostat, remote mounted single stage wall thermostat, remote mounted two stage wall Smart Series Plus digital thermostat) Terminals shall be provided in the control panel for direct connection of the remote wall mounted thermostats. Silent time delay relays shall be provided, rather than contactors, to eliminate the noise of contactor opening and closing.

TERMINALS FOR REMOTE INTERLOCK: Terminals shall be provided in the control panel for connection to Building Automation or Energy Management Systems.

HEAT SELECTION/FAN SPEED: Two fan speeds and high-low heat ranges shall be selectable by means of a single rocker switch located behind the front cover.

CIRCUIT BREAKERS: Circuit breakers shall be provided for branch circuit protection where required by UL, cUL and NEC (Optional - Circuit breakers shall be supplied on all heaters).

INTERCHANGEABLE INTAKE AND DISCHARGE LOUVERS: Heater shall be provided with intake louver that can be changed from front to bottom by removing a maximum of two screws. Discharge louvers shall be able to be changed from front to top by removing a maximum of two screws.

The Following Factory Installed/Prewired Optional Equipment Shall Be Supplied:

- Manual Reset Thermal Cutout
- Circuit Breakers
- Dead Front Disconnect Switch
- Dead Front Fused (Non Fused Disconnect Switch & Circuit Breaker) Disconnect Switch
- On-Off Switch
- Inlet/Discharge Duct Collars
- Permanent (Washable) Filter

The Following Field Installed Optional Equipment Shall Be Supplied:

- Recess Trim Kit
- Base Kit
- Aluminum Wall Louver

**QMark reserves the right to change specifications without prior notice.*

Custom Cabinet Unit Heaters: Models and Specifications

SERIES	KW	BTU/HR	FINAL AIR TEMP	CFM*	AMPERAGE						SHIP WT.
					208 | 1Ø	208 | 3Ø	240 | 1Ø	240 | 3Ø	277 | 1Ø	480 | 3Ø	
CU935 35 in. (L)	2	6,826	72° F	500	10	6	9	6	8	3	120 lbs
	3	10,239	78° F		15	9	13	8	12	4	
	4	13,652	84° F		20	12	17	10	15	6	
	5	17,065	90° F		25	15	22	13	19	7	
	6	20,478	96° F		30	17	26	15	22	8	
	7	23,891	102° F		34	20	30	18	26	9	
	8	27,304	108° F		39	23	34	20	30	10	
CU945 45 in. (L) 160 LBS.	4	13,652	72° F	1,000	20	12	18	11	16	6	160 lbs
	6	20,478	78° F		30	18	26	16	23	8	
	8	27,304	84° F		40	23	34	20	30	11	
	10	34,130	90° F		48	29	43	25	37	13	
	12	40,956	96° F		**59**	34	**51**	30	44	16	
	14	47,782	102° F		**68**	40	**59**	35	**52**	18	
	16	54,608	108° F		**78**	46	**68**	40	**59**	20	
CU968 68 in. (L) 260 LBS.	15	51,195	90° F	1,500	—	44	—	38	—	20	260 lbs
	21	71,673	102° F		—	**60**	—	**52**	—	27	
	24	81,912	108° F		—	**69**	—	**60**	—	31	
CU978 78 in. (L) 300 LBS.	20	68,260	90° F	2,000	—	**58**	—	**50**	—	26	300 lbs
	24	81,912	96° F		—	**69**	—	**60**	—	31	
	28	95,564	102° F		—	**80**	—	**70**	—	36	
	32	109,216	108° F		—	**91**	—	**79**	—	41	

NOTE: **BOLD** numbers represent circuit breakers or fused disconnect required. **380V units will operate with a 16% reduction in heating capacity. +Based on 60°F inlet air temperature. *Values shown is high speed. All models operate at 60hz.

Approvals: _____ _____ _____

Optional Factory-Installed Accessories:

ACCESSORY	DESCRIPTION	
	STANDARD	OPTIONAL
2-Stage Thermostat Built-or Remote	Built-in (or remote-mounted) single-pole, single-stage thermostat that cycles the element(s) and fan. Fan speed and element wattage selected by the built-in HIGH or LOW selector switch.	Built-in (or remote-mounted) two-stage thermostat that cycles 2/3 of the element for during first stage and full heat during second stage. Fan cycles on high speed only.
Smartseries® Plus (Built-In -r Remote)	Built-in (or remote mounted) two stage thermostat runs 2/3 elements on stage 1 and full heat for stage 2. Fan cycles on high speed only. Comes with BACnet BMS compatibility, scheduling, cooling mode(Fan-Only), and keypad lock.	Supply terminal block in the control compartment.
Dead Front Disconnect Switch	A three pole non-fused disconnect switch disconnects power to the heater. Design prevents entry into the control compartment until disconnect switch is turned to the OFF position.	Supply terminal block in the control compartment.
Dead Front Fused Disconnect Switch†	A three pole non-fused disconnect switch and circuit breaker(s) sized to the heater load protects heater and disconnects power to the heater.	Design prevents entry into the control compartment until disconnect switch is turned to the OFF position.
On/Off Switch	No switch supplied.	Built-in switch provides continuous fan operation with or without heat, or automatic fan cycling as the heat cycles on and off.
Key Lock For Front Cover	Two (2) slotted head spring latches.	Two (2) toolhead key lock style spring latches prevent unauthorized adjustment of controls and provides additional safety from injury due to contact with internal components.
Inlet or Discharge Duct Collar(S)	Standard Architectural Grilles	Collars provide easy connection of field supplied duct work. We do not recommend exceeding 0.2 in. wg external static pressure. Heater with duct collars are supplied with a single speed high static motor.
Louver Grilles	Standard Architectural Grille.	Retrofit option to match the old louver design of the cabinet unit heater. This option is only available for both inlet and discharge openings ordered at the same time. Can not be ordered separately.

†Plus price of circuit breaker.

Optional Accessories:

CATALOG NO.	DESCRIPTION	COMPATIBLE WITH	FUNCTION	SHIP WT.
CU935RTK*	Ceiling or Wall Recess Trim Kit	CU935	Provides a neat finish to semi-recessed or full recessed application.	3 lbs
CU945RTK*		CU945		4 lbs
CU968RTK*		CU968		6 lbs
CU978RTK*		CU978		7 lbs
CU935BK*	Floor/Toe-Space Base Kit	CU935	16 gauge, muted black base is recessed from the heater front and sides to provide an attractive and practical floor mounting application.	9 lbs
CU945BK*		CU945		10 lbs
CU968BK*		CU968		13 lbs
CU978BK*		CU978		15 lbs
CU935WF	Permanent, Reusable Washable Filter	CU935	Replaces standard filter Washable filter can be cleaned and replaced.	4 lbs
CU945WF		CU945		6 lbs
CU968WF		CU968		10 lbs
CU978WF		CU978		12 lbs

*Add the appropriate color code suffix after the catalog number; (i.e. W for White, B for Black, etc.)

Dimensions and Clearances:

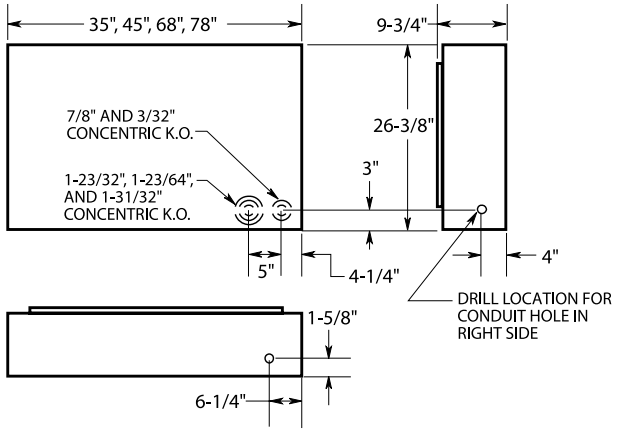

Multiple Air Flow Combinations:

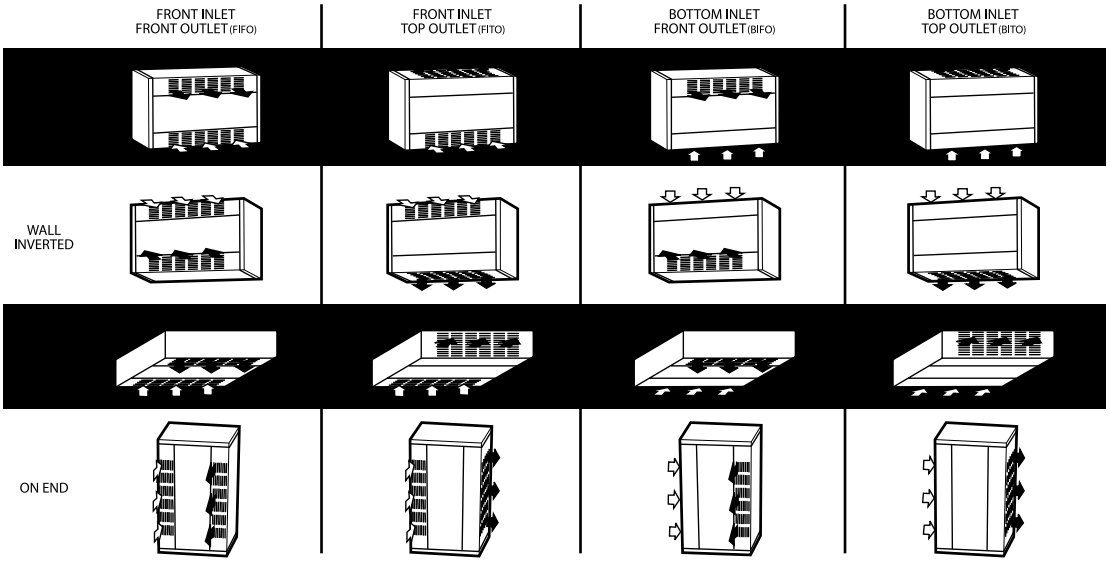

Clearances:

Heater Wall Mounted:

- Front Discharge, No obstruction within 24" of discharge.
- Top Discharge, No obstruction within 24" of discharge.
- Front Intake, Zero or greater to base of heater.
- Bottom Intake, No obstruction within 24" of discharge.

Heater Ceiling Mounted:

- Front Discharge, No obstruction within 24" of discharge.
- Top Discharge, No obstruction within 24" of discharge.
- Front Intake, Zero or greater to base of heater.
- Bottom Intake, No obstruction within 24" of discharge.
- Minimum 2" to side wall.

Approvals: _____ _____ _____

CU900 SERIES

FEATURES

- Attractive cabinet enclosure blends into the decorative schemes of commercial areas.
- Ceiling, floor or wall mounted.
- Surface, full recess or semi-recess mounted.
- Heavy duty cold-rolled steel construction.
- Nineteen capacities: 2kW to 32kW; five cabinet styles: 35″, 45″, 68″, and 78″ lengths (26 ⅜″ height x 9 ¾″ deep).
- ⅛ hp, PSC, motors are two-speed (1550/1450 rpm).
- Resilient mounted motors with automatic thermal overload protection.
- Steel plate fin elements are copper brazed to low watt density, steel-sheathed tubular heating elements. (80/20 NiCh resistance wire). Element is finished with aluminized paint for corrosion resistance. Fins and elements are arranged in a uniform grid pattern and fit closely into the discharge area to assure that all outgoing air passes through the heating element.
- Thermal safety cutout: installed in direct contact with the heating element. Automatically shuts off the heater in the event of overheating due to any cause and reactivates the heater when operating temperature returns to normal.
- Optional: manual reset thermal safety cutout available.
- Heaters over 48 amps have sub-divided (circuit breaker protected) circuits.
- Circuit breakers are available as an option on heaters of less than 48 amps.
- Built-in thermostat: single pole, snap-action thermostat with remote bulb sensor located directly in the air intake. (Optional - built-in two stage thermostat available). Easy and low cost field installation of a completely packaged heater.
- 24 volt control system: all internal controls, including the thermostat, are operated from a built-in prewired transformer with a 24 volt secondary.
- Heaters have a tamper-resistant, two-position selector switch to select full heat at high fan speed and reduced heat at low fan speed.
- Automatic fan delay eliminates cold drafts on start-up and discharges residual heat from the heater body during shut down.
- Silent relays, instead of conventional contractors, eliminate the noise of contactor opening and closing.
- An aluminum wall louver option provides a finished touch to the exterior of masonry or panel walls with thickness of 2 ¾″ or greater.
- Optional: inlet and discharge duct collars—UL listed—provide easy field connection to field supplied duct work. We do not recommend exceeding 0.15″ wg external static pressure.
- Each heater is supplied with a throw-away air filter mounted in the inlet air stream. Optional permanent (washable) aluminum filters are available.
- A front cover interlock is a standard safety feature that de-energizes the heater when the front cover is removed.
- Optional: dead front disconnect switch or fused dead front disconnect switch, disconnects power to the heater. Control panel access door can not be opened until power is turned off.
- Optional: built-in on/off switch allows the heater to be de-energized when not in use.
- An optional trim kit is available for a neat finish to semi-recessed or full recessed applications.
- An optional kick plate in muted black, which is recessed from the heater front and sides by one inch, makes an attractive and practical off-the-floor installation.
- Optional: inlet and/or discharge duct collars.

How to Order

Example:

CU	9	35	10	24	1	F	F	1B	0	0	S	0	P	K	P	-	B

Catalog Prefix: **CU** = QMark

Series

Length: **35** = 35″, **45** = 45″, **68** = 68″, **78** = 78″

*KW: **02**, **03**, **04**, **05**, **06**, **07**, **08**, **09**, **10**, **11**, **12**, **14**, **15**, **16**, **18**, **20**, **21**, **24**, **28**, **32**

*Voltage: **20** = 208V, **24** = 240V, **27** = 277V, **34** = 347V, **48** = 480V, **60** = 600V

*Phase: **1** = 1Ø, **3** = 3Ø

Inlet Configuration: **F** = Front, **B** = Bottom

Outlet Configuration: **F** = Front, **T** = Top

*Thermostat: **1B** = Single Stage Built In, **1R** = Single Stage Remote Wall Mount, **2B** = Two Stage Built In, **2R** = Two Stage Remote Wall Mount, **SB** = SmartSeries Built In, **SR** = SmartSeries Remote

*Control Voltage: **2** = 24VAC

*Circuit Breaker: **C** = Circuit Breaker, **0** = None

*Disconnect Switch: **S** = Disconnect Switch, **F** = Fused Circuit Breaker Disconnect, **0** = None

*On-Off Switch: **S** = Heat On/Off Switch, **0** = None, **0** = N/A-SmartSeries Controls

Air Intake Filter: **0** = Std. Throw-Away, **P** = Permanent Washable

Front Cover Lock: **0** = Std. Lock, **K** = Key Lock

Duct Collar/Grille: **0** = Standard Inlet/Standard Discharge, **I** = Duct Inlet/Standard Discharge, **D** = Standard Inlet/Duct Discharge, **B** = Duct Inlet/Duct Discharge, **L** = Louvre Inlet/Louvre Outlet, **M** = Duct Inlet/Louvre Discharge, **N** = Louvre Inlet/Duct Discharge, **A** = Architectural Inlet/Architectural Discharge, **F** = Architectural Inlet/Standard Discharge, **G** = Architectural Inlet/Duct Discharge *Standard = Wrigley

Cabinet Finish: **A** = Aluminum, **B** = Black, **G** = Charcoal Grey, **N** = Beige, **W** = White, **S** = Statuary Bronze, **U** = Special Color Request

Manual Reset now standard on all CU's. Summer Fan Switch - Now order Digital Controls. Night Set Back - Now order Digital Controls. Outside Air Damper - no longer offered. Colors are all monochrome unless special request.
*Consult Marley Sales Representative for specific configuration needs

No matter the industry or application, Marley Engineered Products has a robust portfolio of innovative, reliable, high-performance comfort heating and ventilation solutions for all your heating needs.

For more information or assistance on your next project, contact Technical Services at 800-642-4328

Scan the QR code to access additional specs and features

Approvals: _____ _____ _____