# QM-CRG
## Self-Regulating Heating Cable





### *Technical Specifications*:

**Temp Range**: -40 to 185F

### *Applications*:

Freeze Protection
Roof & Gutter De-Icing
Frost Heave Prevention
Floor Warming
Fire Equipment Freeze Protection
Heat Loss replacement

UL Pipe Heating Cable
Roof and Gutter De-icing

- Self-Regulating Power Output
- Continuous Maintenance Temperature
  - •150°F (65°C) Max
- Maximum Exposure Temperature
  - •185°F (85°C) Max
- Output Wattage (pipe application)
  - •3, 5, 8, & 10 W/FT @ 50°F
  - •10, 16, 26, & 33 W/M @ 10°C
- Output Wattage (roof and gutter)
  - •12 W/FT  in snow/ice (32°F)
- Supply Voltage
  - •120, 208-277 VAC
- Size = 1/2" W x 1/4" H
- Minimum Bend Radius = 1 1/8"
- Minimum Install Temperature
  - •-40°F (-40°C)
- Cut to Length and terminate in the field
- Can be overlapped without burnout

# QM-CRG
## Self-Regulating Heating Cable

Maximum Circuit Lengths per start up temperature and circuit breaker size are shown below. Use local electrical codes to select appropriate branch circuit breakers. Ground Fault circuit breakers are required for heat trace branch circuits – typical minimum trip level is 30mA. Thermal magnetic circuit breakers are recommended to reduce nuisance tripping.

### *Models & Specifications: Circuit Breaker Sizing*

| ITEM INFORMATION | | | MAXIMUM CIRCUIT LENGTH VS BREAKER SIZE & START-UP TEMP FT (M) | | | | | |
|---|---|---|---|---|---|---|---|---|
| | CATALOG NO. | UPC | START-UP TEMPERATURE DEG F DEG C | 15A | 20A | 30A | 40A | SHIP WT. |
| | QM-CRG03-1 | | 50 (10) | 300 (92) | 330 (100) | 330 (100) | 330 (100) | |
| | | | 0 (-18) | 200 (60) | 270 (82) | 330 (100) | 330 (100) | |
| | | | -20 (-29) | 180 (55) | 230 (70) | 330 (100) | 330 (100) | |
| | QM-CRG03-2 | | 50 (10) | 660 (200) | 660 (200) | 660 (200) | 660 (200) | |
| | | | 0 (-18) | 410 (125) | 560 (170) | 660 (200) | 660 (200) | |
| | | | -20 (-29) | 360 (110) | 480 (146) | 660 (200) | 660 (200) | |
| | QM-CRG05-1 | | 50 (10) | 230 (70) | 270 (82) | 270 (82) | 270 (82) | |
| | | | 0 (-18) | 150 (45) | 200 (60) | 270 (82) | 270 (82) | |
| | | | -20 (-29) | 130 (40) | 175 (54) | 260 (80) | 270 (82) | |
| | QM-CRG05-2 | | 50 (10) | 460 (140) | 540 (165) | 540 (165) | 540 (165) | |
| | | | 0 (-18) | 300 (92) | 400 (122) | 540 (165) | 540 (165) | |
| | | | -20 (-29) | 260 (80) | 345 (105) | 520 (160) | 540 (165) | |
| | QM-CRG08-1 | | 50 (10) | 150 (45) | 200 (60) | 210 (64) | 210 (64) | |
| | | | 0 (-18) | 95 (30) | 125 (38) | 190 (58) | 210 (64) | |
| | | | -20 (-29) | 85 (26) | 100 (31) | 170 (52) | 210 (64) | |
| | QM-CRG08-2 | | 50 (10) | 295 (90) | 390 (119) | 420 (128) | 420 (128) | |
| | | | 0 (-18) | 195 (60) | 250 (76) | 375 (115) | 420 (128) | |
| | | | -20 (-29) | 170 (52) | 225 (69) | 340 (104) | 420 (128) | |
| | QM-CRG10-1 | | 50 (10) | 115 (35) | 150 (45) | 180 (55) | 180 (55) | |
| | | | 0 (-18) | 70 (22) | 95 (30) | 145 (44) | 180 (55) | |
| | | | -20 (-29) | 60 (18) | 85 (26) | 120 (37) | 165 (50) | |
| | QM-CRG10-2 | | 50 (10) | 230 (70) | 305 (93) | 360 (110) | 360 (110) | |
| | | | 0 (-18) | 150 ( 45) | 200 (60) | 300 (92) | 360 (110) | |
| | | | -20 (-29) | 130 (40) | 175 (54) | 260 (80) | 360 (110) | |

**SKU Legend:** ◆ **= Popular Products;** ● **= Extended Offering** (Contact your local Marley Sales Representative for typically associated lead times)

NOTE: Circuit lengths shown above are based on trip current characteristics of Type QO and Type QOB devices. For equipment with different trip current characteristics please consult Marley

**All Cables require power connection and end seal terminations as a minimum to comply with third party requirements. Marley offers accessories to provide trouble free easy installation and maximum cable circuit life.**

### *Connection Accessories:*

| MODEL | UPC | DESCRIPTION | SHIP WT.* |
|---|---|---|---|
| PCA-40J | | Power Connection | |
| PCA-40P | | Pipe Stand Off Kit | |
| MEP-PCA-HW | | Power Connection Kit - Hot Water Maintenance, no enclosure (end seal not included in kit) | |
| MEP-ESA-ES | | End seal (Hot Water Maintenance) | |
| MEP-ESA-RG | | End Seal (Roof and Gutter) | |
| MEP-PCA-RG2 | | Power Connection Kit - Roof & Gutter, no enclosure (end seal included in kit) | |
| MEP-SPTA-1 | | Splice/Tee Connection (10/pk) | |
| MEP-RC-RG | | Roof & Gutter - Roof Clips (40/pk) | |
| MEP-DS-RG | | Roof & Gutter - Downspout Hangar (10/pk) | |
| LESA-1 | | Light End Seal 120V | |
| LESA-2 | | Light End Seal 208-240V | |
| HTTS-A | | Thermostat - Ambient Sense | |
| HTTS-L | | Thermostat - Line Sense | |
| HTFT-1 | | Application Tape | |
| HTAT-1 | | Aluminum Foil Tape | |
| HTPS-6 | | 6 inch Pipe Strap | |
| HTPS-10 | | 10 inch Pipe Strap | |
| QM-HTCL-1 | | Caution Label (10/pk) | |

All Cables require power connection and end seal terminations as a minimum to comply with third party requirements. Marley offers accessories to provide trouble free easy installation and maximum cable circuit life..

# QM-CRG
## Self-Regulating Heating Cable

### *Construction:*

A. 16 AWG Nickel Plated Copper Buss Wires
B. Radiation Cross Linked Polymer Heater Core
C. Flame Retardant, UV Stabilized Polyolefin Jacket
D. Tinned Copper Braid
E. Modified Polyolefin Outer Jacket
   - •UV Stabilized
   - •Flame Retardant
   - •Protects Cable against aqueous inorganic Chemicals

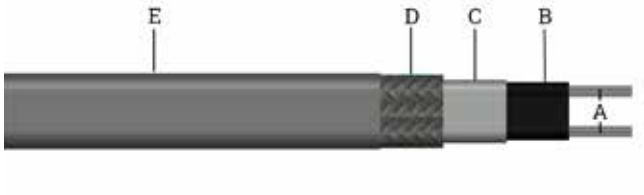


### *Power Output Curves:*

Power Output Curves shown below apply to cables used at service voltages shown below on insulated metal pipes. For Plastic pipe installation derate cable power output by 35% and use aluminum tape installation method. For other applications contact Marley.

| POWER ADJUSTMENT FACTOR | | |
|---|---|---|
| MODEL | 208 VOLTS | 277 VOLTS |
| QM-CRG03-2 | 0.75 | 1.28 |
| QM-CRG05-2 | 0.86 | 1.16 |
| QM-CRG08-2 | 0.91 | 1.1 |
| QM-CRG10-2 | 0.93 | 1.08 |

Power Output Curves - QM-CRG Series

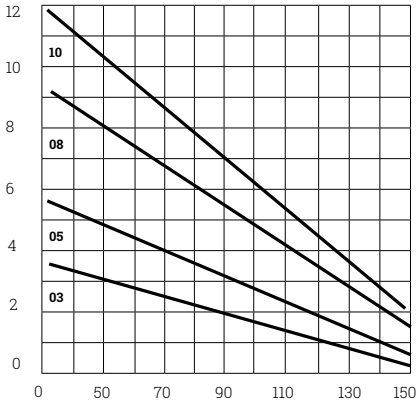


### *Product Ordering Information:*

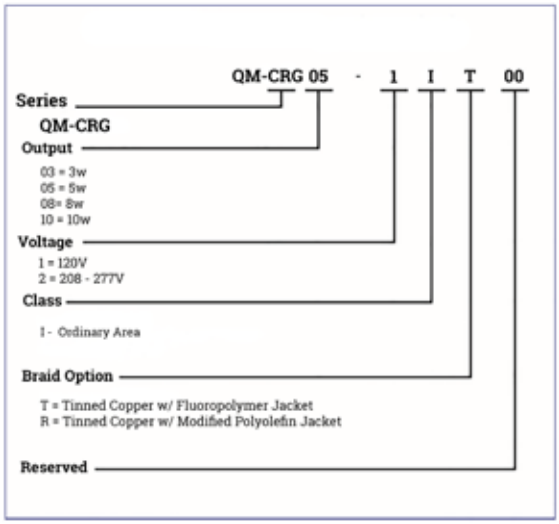


Note = QM-CRG 5 w/ft cable 12 w/ft in snow and ice recommended for roof and gutter de-icing applications

| ORDERING INFORMATION | | | | |
|---|---|---|---|---|
| OUTPUT W/FT | VOLTS | MODEL | STOCK | LBS/ 1000' |
| 3 W/FT @ 50F | 120 | QM-CRG03-11R00 | S | 80 |
| | | QM-CRG03-11T00 | S | 80 |
| | 208-277 | QM-CRG03-21R00 | S | 80 |
| | | QM-CRG03-21T00 | S | 80 |
| 5 W/FT @ 50F | 120 | QM-CRG05-11R00 | S | 80 |
| | | QM-CRG05-11T00 | S | 80 |
| | 208-277 | QM-CRG05-21R00 | S | 80 |
| | | QM-CRG05-21T00 | S | 80 |
| 8 W/FT @ 50F | 120 | QM-CRG08-11R00 | S | 80 |
| | | QM-CRG08-11T00 | S | 80 |
| | 208-277 | QM-CRG08-21R00 | S | 80 |
| | | QM-CRG08-21T00 | S | 80 |
| 10 W/FT @ 50 F | 120 | QM-CRG10-11R00 | S | 80 |
| | | QM-CRG10-11T00 | S | 80 |
| | 208-277 | QM-CRG10-21R00 | S | 80 |
| | | QM-CRG10-21T00 | S | 80 |

Note = To order specify model, length, and connection accessories. Cables are shipped +/- 5% of label, maximum spool length 1000 feet, minimum order is 250 feet. No fee to cut to length between 250 and 1000 feet.