470 Beauty Spot Rd. E
Bennettsville, SC 29512

SUBMITTAL SHEET
THZ SERIES CONTACTOR PANELS
INDUSTRIAL/COMMERCIAL/ RESIDENTIAL CONTROLS

THZ SERIES CONTACTOR PANELS



CAPACITIES

- Power Supply Voltage: 120-600V, 1 & 3P
- Control Voltage: 24vac, 120V
- NEMA Type 1 and NEMA Type 3R enclosures
- 1-20 Zone Control
- GFI protection

See Selection Chart for all Options

JOB NAME: _____

LOCATION: _____

ARCHITECT: _____

ENGINEER: _____

CONTRACTOR: _____

SUBMITTED BY: _____ DATE: _____

TAG/ITEM	QTY.	CATALOG NUMBER	# OF ZONES / CIRCUITS	INCOMING VOLTAGE AND PHASE	OUTGOING VOLTAGE AND PHASE	CONTROL VOLTAGE	ENCLOSURE TYPE (1/3R)	GFI (Y/N)

SUBMITTED BY:	DATE

APPROVED BY:	DATE

ARCHITECT'S AND ENGINEER'S SPECIFICATIONS*

CONTACTOR PANELS

THZ Series Contactor Panels shall be supplied QMark®, a Marley Engineered Products® Brand, Bennettsville, SC, USA, and shall be of the voltage, phase, and circuits specified in the schedule. They shall be certified to cULus listed under standard 2021. QMark's Contactor Panels are the most effective method of controlling your Thermazone, Thermazone Thin, and FRP/FRS heaters, among a wide variety of other units as well. Each Contactor Panel model is designed to allow for field designation of one or multiple zones, offering complete customization when controlling heaters individually or in groups. Each 30A or 60A contactor is able to carry one or several heaters. These contactor panels are often partnered with thermostats (simple and smart), but may also be controlled with on/off switches, timers, and other low cycle 24vac and 120vac controllers. QMark's contactor panels are factory wired for quick and efficient installations and offer an affordable solution for every project.

SOLUTION OVERVIEW

- Nema Type 1 standard w/ Type 3R enclosure available, cULus listed and labeled.
- 24vac and 120V Control Voltage available.
- Suitable for smart or standard wall thermostats, timers, on/off switches, and any other low cycle controller.
- Single phase panels available with 30A Contactors in 2, 5, 10 or 20 unit designs. Supply voltage from 120-600V.
- Three phase panels available with 30A or 60A Contactors in 2, 5, 10 or 20 unit designs. Supply voltage from 208-600V.
- All Contactors rated up to 600V.
- Single and multi-zone control capability.
- Nothing to program, all the intelligence is in the low voltage control.
- GFI Protection can be added to all 30A Contactors in the 2C, 5C, or 10C sizes.

QMark reserves the right to change specifications without prior notice.

Approvals: _____ _____ _____

THZ SERIES CONTACTOR PANELS

MODEL #	DESCRIPTION	SUPPLY VOLTAGE	PHASE	DIMENSIONS HXWXD			
				TYPE 1 ENCLOSURE SIZE	TYPE 1 "-GFI" ENCLOSURE SIZE	TYPE 3R "-3R" ENCLOSURE SIZE	TYPE 3R "-3R-GFI" ENCLOSURE SIZE
2-CIRCUIT PANEL							
QR-THZ-S30-2C-0	2 DP Contactors, 30amps each, 24vac control	120-600	1	20"x16"x6"	24"x16"x6"	20"x16"x6"	24"x20"x6"
QR-THZ-S30-2C-1	2 DP Contactors, 30amps each, 120vac control	120-600	1	20"x16"x6"	24"x16"x6"	20"x16"x6"	24"x20"x6"
QR-THZ-T30-2C-0	2 DP Contactors, 30amps each, 24vac control	208-600	3	20"x16"x6"	24"x20"x6"	20"x16"x6"	24"x20"x6"
QR-THZ-T30-2C-1	2 DP Contactors, 30amps each, 120vac control	208-600	3	20"x16"x6"	24"x20"x6"	20"x16"x6"	24"x20"x6"
5-CIRCUIT PANEL							
QR-THZ-S30-5C-0	5 DP Contactors, 30amps each, 24vac control	120-600	1	24"x16"x6"	24"x24"x6"	24"x20"x6"	24"x20"x6"
QR-THZ-S30-5C-1	5 DP Contactors, 30amps each, 120vac control	120-600	1	24"x16"x6"	24"x24"x6"	24"x20"x6"	24"x20"x6"
QR-THZ-T30-5C-0	5 DP Contactors, 30amps each, 24vac control	208-600	3	24"x24"x6"	30"x24"x6"	24"x24"x6"	30"x24"x8"
QR-THZ-T30-5C-1	5 DP Contactors, 30amps each, 120vac control	208-600	3	24"x24"x6"	30"x24"x6"	24"x24"x6"	30"x24"x8"
QR-THZ-T60-5C-0	5 DP Contactors, 60amps each, 24vac control	208-600	3	30"x24"x8"	N/A	30"x24"x8"	N/A
QR-THZ-T60-5C-1	5 DP Contactors, 60amps each, 120vac control	208-600	3	30"x24"x8"	N/A	30"x24"x8"	N/A
10-CIRCUIT PANEL							
QR-THZ-S30-10C-0	10 DP Contactors, 30amps each, 24vac control	120-600	1	24"x20"x6"	30"x24"x6"	24"x20"x6"	36"x24"x8"
QR-THZ-S30-10C-1	10 DP Contactors, 30amps each, 120vac control	120-600	1	24"x20"x6"	30"x24"x6"	24"x20"x6"	26"x24"x8"
QR-THZ-T30-10C-0	10 DP Contactors, 30amps each, 24vac control	208-600	3	30"x24"x6"	36"x24"x6"	30"x24"x8"	36"x30"x8"
QR-THZ-T30-10C-1	10 DP Contactors, 30amps each, 120vac control	208-600	3	30"x24"x6"	36"x24"x6"	30"x24"x8"	36"x30"x8"
QR-THZ-T60-10C-0	10 DP Contactors, 60amps each, 24vac control	208-600	3	30"x24"x6"	N/A	30"x24"x8"	N/A
QR-THZ-T60-10C-1	10 DP Contactors, 60amps each, 120vac control	208-600	3	30"x24"x6"	N/A	30"x24"x8"	N/A
20-CIRCUIT PANEL							
QR-THZ-S30-20C-0	20 DP Contactors, 30amps each, 24vac control	120-600	1	36"x24"x6"	N/A	36"x24"x8"	N/A
QR-THZ-S30-20C-1	20 DP Contactors, 30amps each, 120vac control	120-600	1	36"x24"x6"	N/A	36"x24"x8"	N/A
QR-THZ-T30-20C-0	20 DP Contactors, 30amps each, 24vac control	208-600	3	36"x36"x6"	N/A	36"x30"x8"	N/A
QR-THZ-T30-20C-1	20 DP Contactors, 30amps each, 120vac control	208-600	3	36"x30"x6"	N/A	36"x30"x8"	N/A
QR-THZ-T60-20C-0	20 DP Contactors, 60amps each, 24vac control	208-600	3	36"x30"x6"	N/A	36"x30"x8"	N/A
QR-THZ-T60-20C-1	20 DP Contactors, 60amps each, 120vac control	208-600	3	36"x30"x6"	N/A	36"x30"x8"	N/A

MODEL #	DESCRIPTION
-3R	Upgrade the Contactor Panel or SSR Panel to a Type 3R enclosure
-GFI	GFI protection to the control panel

Optional Local Controls:

MODEL #	DESCRIPTION	SUPPLY VOLTAGE	PHASE	AMP RATING	SUITABLE WITH		
					CONTACTOR PANEL	STAND ALONE	SSR PANEL
TZ-REM-PT	Fixed Cycle Controller w/ Adjustable Output	120/24	1	NA	-	-	✓
TZ-PCT	Adjustable Cycle Controller w/ Adjustable Output	120/240	1	28	✓	✓	✓
TZ-TIMER	0-60 Min Heavy Duty In-Wall On/Off Timer	120/240	1	28	✓	✓	✓
TZ-TIMER2HR	0-120 Min Heavy Duty In-Wall On/Off Timer	120/240	1	20	✓	✓	✓
TZ-HUB	App Based Z-Wave Wireless Connection Hub	120	1	NA	✓	✓	✓
TZ-SWITCH	App Based Z-Wave Wireless Junction Box	120/240	1	40	✓	✓	✓

"Optional controls suitable for isolated control of your heater(s), or to be paired with QMarks line of control panels to operate banks of heaters together. Options range from adjustable output cycle timers with fixed and adjustable cycle times, to standard on/off timer control, and introducing market leading Z-Wave app based control for easy operation from your phone."

Approvals: _____ _____ _____

THZ SERIES CONTACTOR PANELS

How to Order

Example:

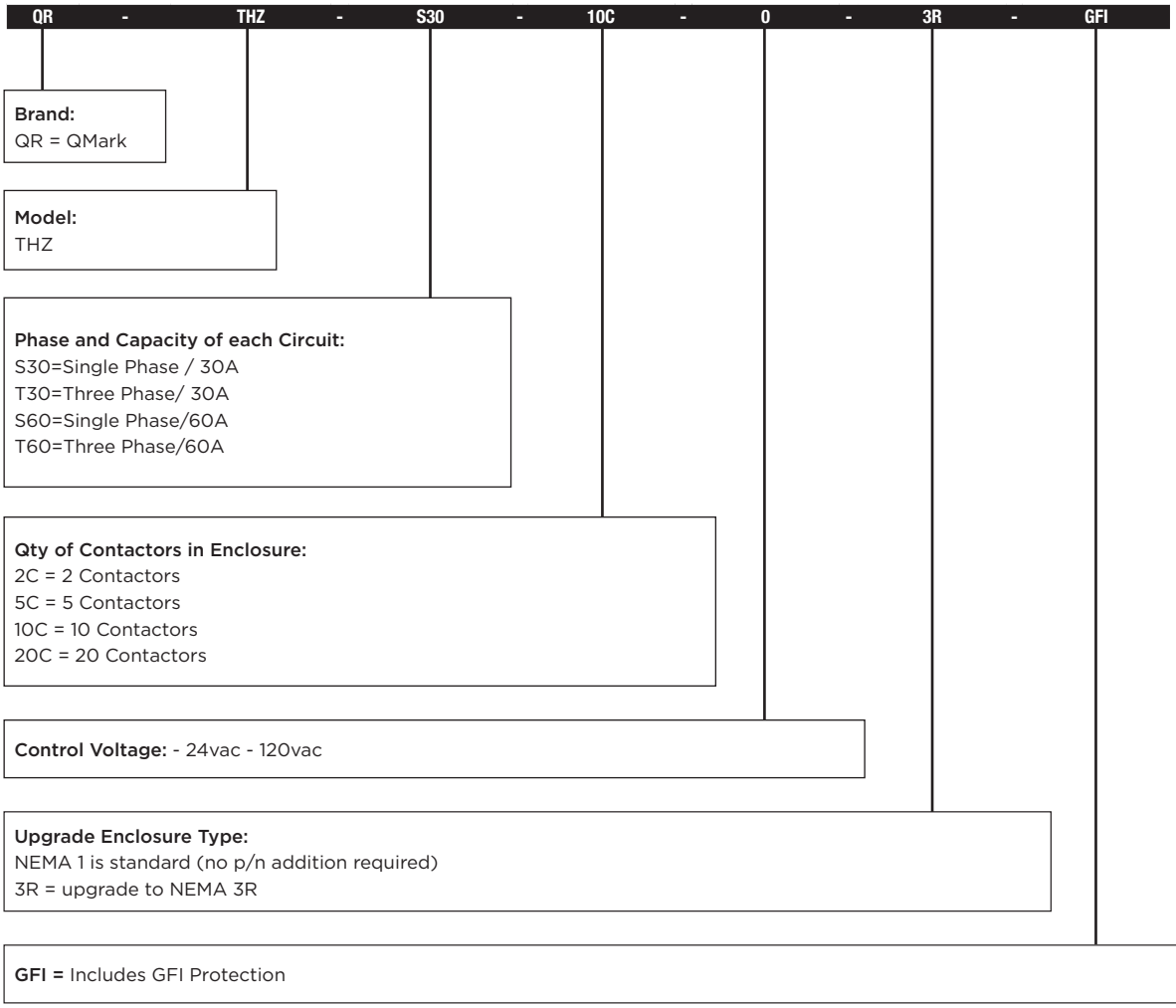

Approvals: _____ _____ _____

THZ Contactor Panel Layout - STD Type 1 Enclosure

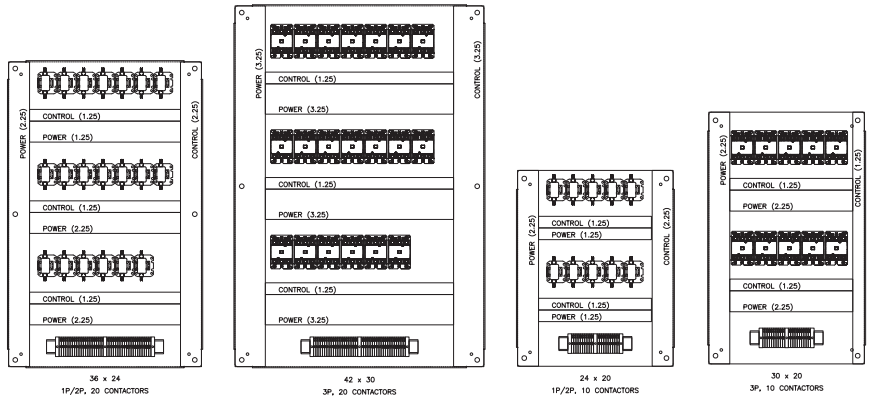

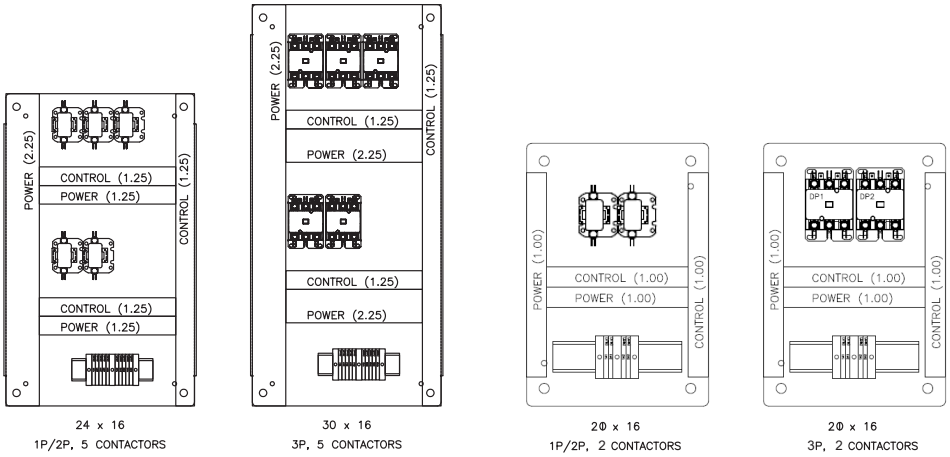

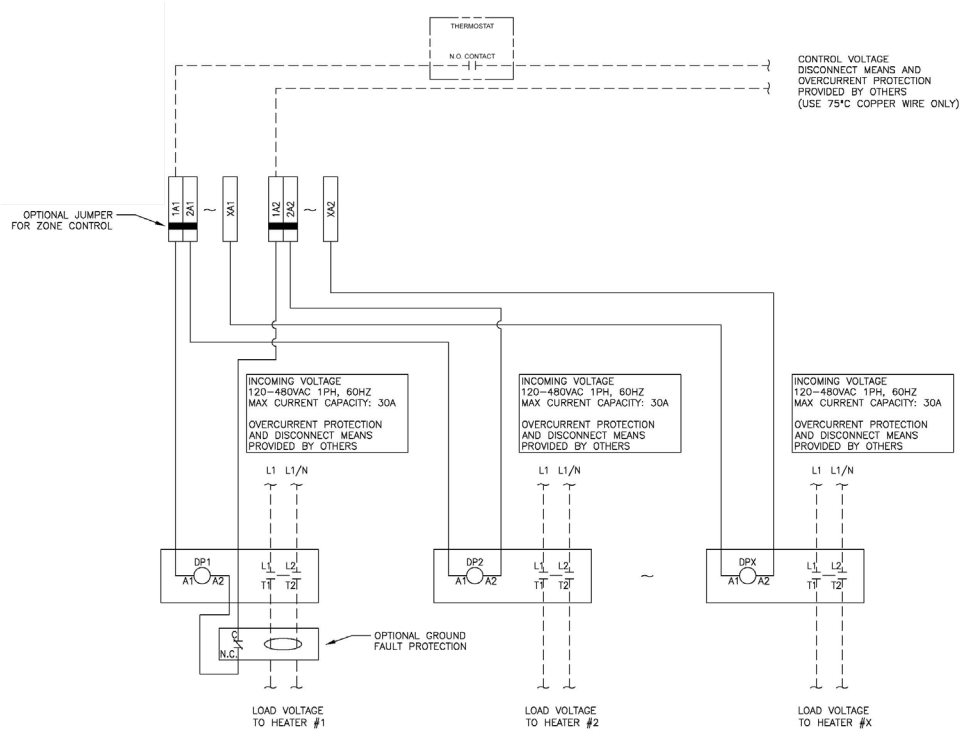

No matter the industry or application, Marley Engineered Products has a robust portfolio of innovative, reliable, high-performance comfort heating and ventilation solutions for all your heating needs.

For more information or assistance on your next project, contact Technical Services at 800-642-4328

Scan the QR code to access additional specs and features

Approvals: _____ _____ _____

THZ SERIES CONTACTOR PANELS

HEAVY DUTY TIMER



OVERVIEW

Proudly manufactured in the USA and engineered for demanding electrical loads and are the most robust in-wall time switch in the industry offering a 28 Amp rating.

APPLICATIONS

TZ-Timer can be used in a variety of residential and commercial applications providing convenient timed control of heaters, saunas, jacuzzi's, heavy duty blower control, track lighting, industrial machinery and other circuits requiring 28 Amp loads. The brushed aluminum wall plate and black knob is perfect for commercial environments.

RATINGS

INPUT: 120-240 VAC, 60 Hz

28 AMP	General Purpose
1 Hp	Motor

ORDERING INFORMATION

Part #	*Description*
TZ-TIMER	60 Minute
TZ-TIMER-2HR	120 Minute

FEATURES & BENEFITS

- Versatile time limits allow for quick, simple operation while providing the most effective energy management.
- Select models have a convenient hold feature to override automatic shutoff.
- Supplied with knob, brushed aluminum dial and wall plate.
- Fits double-gang wall box and replaces a single-pole or double-pole wall switch for fast easy installation.
- Proudly manufactured in the USA.
- 1-Yr Limited Warranty

Installation Diagram

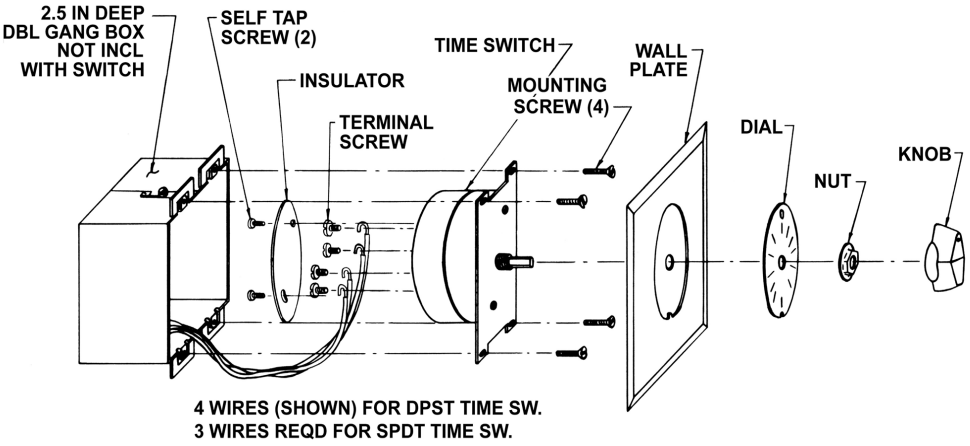

c UL us LISTED

Wiring Diagram

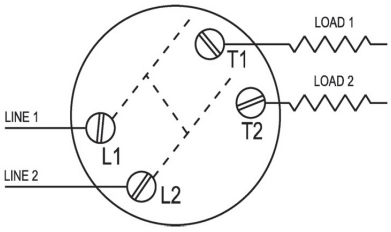

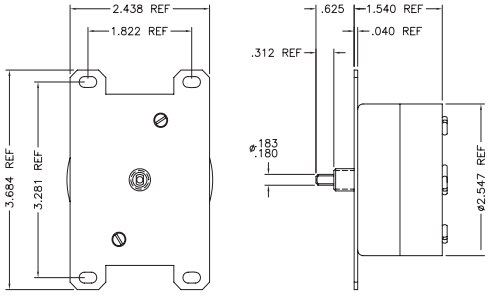

Approvals: _____ _____ _____

TZ-SWITCH

The TZ-SWITCH can be wired in a 1 phase or 2 phase configuration. Below you will find diagrams that you can use to wire up your TZ-SWITCH.

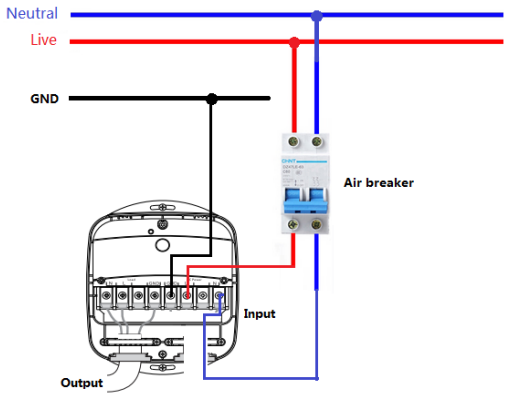

Important: TZ-SWITCH must wired behind an air break switch for safety and electric compliance.(Note: Air Circuit Breaker is the same as a Circuit Breaker)

Below are general wiring diagrams to give you a better idea on how to wire the TZ-SWITCH, but an Air Breaker will need to be installed (refer to image above) for general safety and electrical compliance.

AC Neutral is a required connection for the input power side of TZ-SWITCH, but is not required of the output terminals.

120VAC single phase wiring.

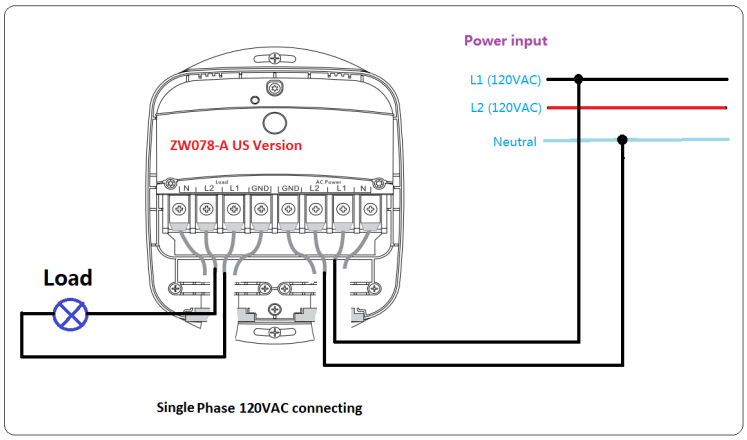

240VAC split phase wiring.

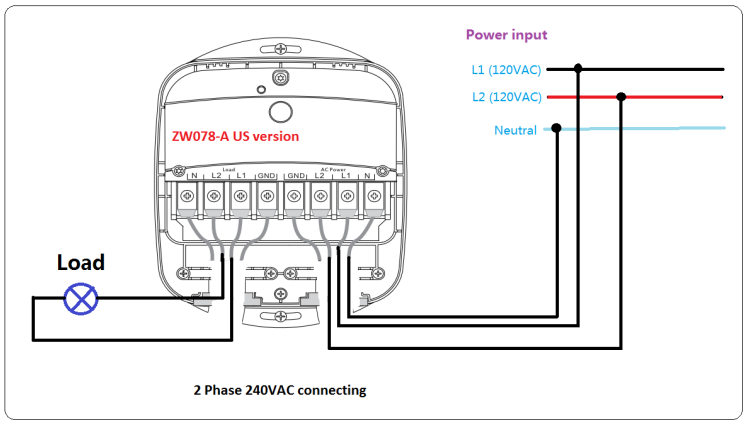

Approvals: _____ _____ _____

TZ-PCT



240V / 208V WIRING DIAGRAM

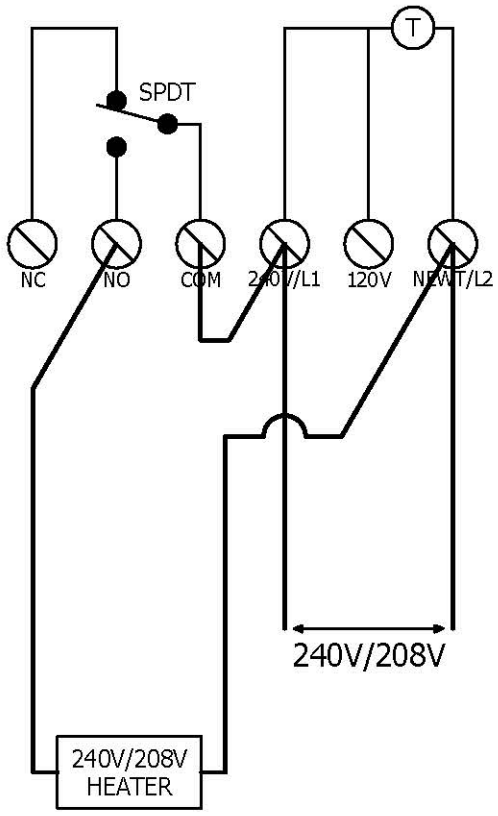

120V WIRING DIAGRAM

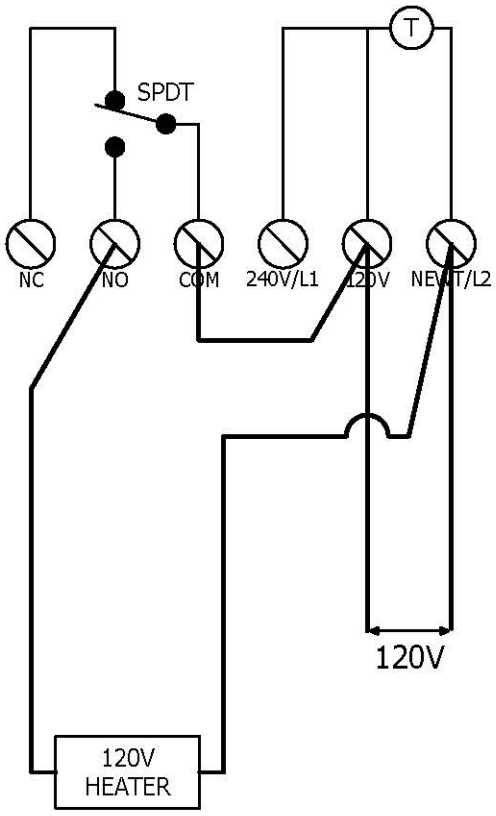

#12AWG WIRE RATED AT
90°C (194°F) OR GREATER

No matter the industry or application, Marley Engineered Products has a robust portfolio of innovative, reliable, high-performance comfort heating and ventilation solutions for all your heating needs.

For more information or assistance on your next project, contact Technical Services at 800-642-4328

Scan the QR code to access additional specs and features

Approvals: _____ _____ _____