CSH SERIES
Commercial Sill-Height Steel Convector



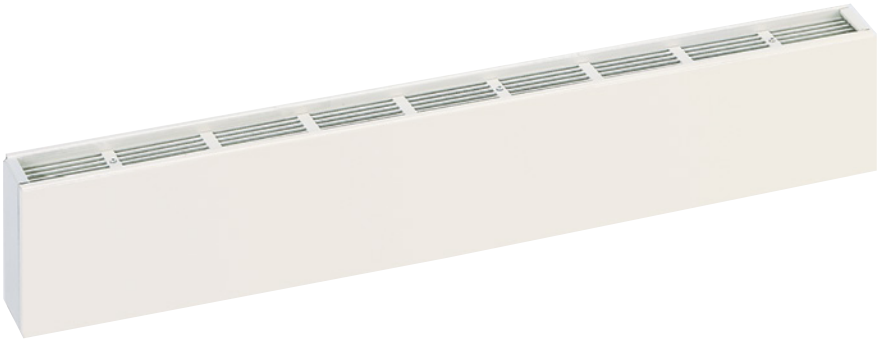

Ideal Spaces:

Offices
Hallways
Lobbies
Conference Rooms
Retail
Floor-to-Ceiling Windows

White Beige Charcoal Grey

Bronze Black Aluminum

Custom and/or Anodized Colors also Available

- Perfect for under-the-window heat loss and condensation prevention
- Durable front cover constructed of 16-gauge steel (optional 14-gauge available)
- Wall-mounted design; bottom or front inlet—top outlet
- Units may contain 1–3 heating elements that yield a broad range of heating capacity (see specifications)
- Optional ¼ in. mesh located under the discharge grille to deter insertion of objects and restriction of airflow
- Blend into any décor with 8 standard color options or custom finishes and anodizing available upon request
- Locate at sill height (or lower) or run from mullion-to-mullion
- Units can be mounted from wall-to-wall or as discrete units in standard lengths of 28 in. to 10 ft.
- Optional built-in controls include: line voltage thermostat (SPST or DPST); two-stage thermostat; power on/off switch; transformer relay; and power relay (see specifications)
- Right- or left-hand entry/wiring flexibility with identical pre-wired junction boxes at either end
- End-to-End wire-way provided for ease of wiring; and rated per the NEC conduit size and rating codes. Please consult factory for proper sizing and specifications
- Easy connection of supply wiring from bottom, rear or end, as well as multiple wiring of adjacent heaters from one entry point
- For service, all internal parts are accessible by removing cover

c UL us

5 YEAR WARRANTY ELEMENT

1 YEAR WARRANTY WORKMANSHIP

QMARK A Marley Engineered Products Brand

CSH SERIES
Commercial Sill-Height Steel Convector

5 ½" x 3" — Single Element Lengths

Length	28"	3′	4′	5′	6′	8′	10′
Shipping Weight	11 lbs	15 lbs	18 lbs	25 lbs	29 lbs	38 lbs	47 lbs

NOTE: All models are NON-STOCK, MADE-TO-ORDER. When ordering, specify quantity, catalog number, voltage, wattage, optional controls, and color. Consult sales representative for lead times.

*Watts per Ft.**

125	188
250	

*Voltages**

120	208	240
277	347	600

7" x 5" & 14" x 5" — Multiple Elements Lengths

	Length	28"	3′	4′	5′	6′	8′	10′
Shipping Weight	*7" x 5"*	17 lbs	21 lbs	28 lbs	35 lbs	42 lbs	56 lbs	70 lbs
	14" x 5"	25 lbs	32 lbs	42 lbs	53 lbs	60 lbs	80 lbs	100 lbs

NOTE: All models are NON-STOCK, MADE-TO-ORDER. When ordering, specify quantity, catalog number, voltage, wattage, optional controls, and color. Consult sales representative for lead times.
5 ½ in. and 7 in. high models are available with top outlet only; 14 in. models are available with top or front outlet.

*Watts per Ft.**

1 Element	125	188	250
2 Elements	375	500	
3 Elements	564	625	750

*Specs vary by length. Refer to the submittal sheet for full details.

*Voltages**

Single Phase	208	240	277
	347	600	
Three Phase	208	240	600

Optional Accessories:

	CATALOG NO.	COMPATIBLE WITH	HEIGHT	DEPTH	LENGTH	SHIP WT.
BLANK SECTIONS	CSH05BL2*	CSH05	5 ½"	3"	28"	10 lbs
	CSH05BL3*				3′	14 lbs
	CSH05BL4*				4′	18 lbs
	CSH05BL5*				5′	23 lbs
	CSH05BL6*				6′	27 lbs
	CSH05BL8*				8′	36 lbs
	CSH05BL10*				10′	45 lbs
	CSH07BL2*	CSH07	7"	5"	28"	16 lbs
	CSH07BL3*				3′	20 lbs
	CSH07BL4*				4′	26 lbs
	CSH07BL5*				5′	33 lbs
	CSH07BL6*				6′	39 lbs
	CSH07BL8*				8′	52 lbs
	CSH07BL10*				10′	65 lbs
	CSH14BL2*	CSH14	14"	5"	28"	23 lbs
	CSH14BL3*				3′	30 lbs
	CSH14BL4*				4′	40 lbs
	CSH14BL5*				5′	50 lbs
	CSH14BL6*				6′	60 lbs
	CSH14BL8*				8′	80 lbs
	CSH14BL10*				10′	100 lbs

Outlet Mesh: Price per foot. 14-Gauge Front Cover: add 10% to heater price. Standard color included in base price. Other colors available. See paint policy page for information on custom paint colors. Maximum of 250 watts per ft. on front outlet models. When ordering, specify heater catalog number, voltage, phase, suffix catalog number for built-in controls, color, and options. 2. If color is not specified, front covers will be Beige. Front outlet models available only in 14 in. height and 125, 188 and 250 Wt./Ft. configuration. Outlet mesh is not available on front outlet models..

* Additional length the accessory adds to the total installation length. ** Built-in duplex receptacle available.
Add model numbers suffix "-1" for bottom inlet - top outlet; add suffix "-3" for bottom inlet - front outlet. Additional accessories and diagrams are on the following pages.

Reference Marley Catalog and Submittals for additional control option details.

Dimensions and Clearances:

	Dimensions	
Cat. No.	H	D
CSH05	5 ½"	3"
CSH07	7"	5"
CSH14	14"	5"

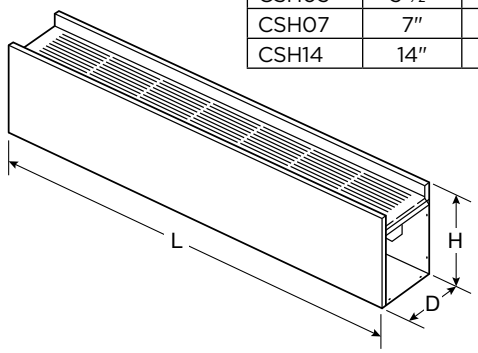

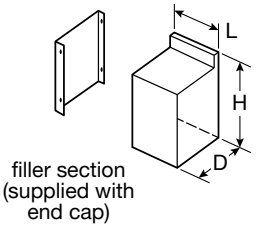

filler section (supplied with end cap)

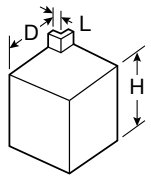

outside corner

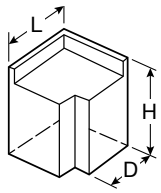

inside

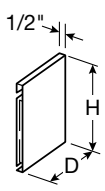

end

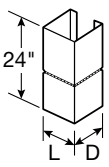

conduit

CSH SERIES
Commercial Sill-Height Steel Convector

Scan the QR code to access additional specs and features

Optional Accessories:

		CATALOG NO.	COMPATIBLE WITH	HEIGHT	DEPTH	LENGTH	ADDITIONAL LENGTH	SHIP WT.
END CAPS	LEFT	CSH05ECL**	CSH05	5 ½"	2 ½"	-	⅛"	1 lbs
		CSH07ECL**	CSH07	7"	4 ¼"			1 lbs
		CSH14ECL**	CSH14	14"	4 ¼"			1 lbs
	RIGHT	CSH05ECR**	CSH05	5 ½"	2 ½"	-	⅛"	1 lbs
		CSH07ECR**	CSH07	7"	4 ¼"			1 lbs
		CSH14ECR**	CSH14	14"	4 ¼"			1 lbs
FILLER SECTIONS		CSH05FL3	CSH05	5 ½"	5 ⅛"	4"	0–3"	1 lbs
		CSH07FL3	CSH07	7"	6 ⅛"			2 lbs
		CSH14FL3	CSH14	14"	13 ⅛"			3 lbs
		CSH05FL6**	CSH05	5 ⅛"	2 ½"	7"	3–6"	2 lbs
		CSH07FL6**	CSH07	6 ⅛"	4 ½"			3 lbs
		CSH14FL6**	CSH14	13 ⅛"	4 ½"			5 lbs
		CSH05FL9**	CSH05	5 ⅛"	2 ½"	10"	6–9"	3 lbs
		CSH07FL9**	CSH07	6 ⅛"	4 ½"			4 lbs
		CSH14FL9**	CSH14	13 ⅛"	4 ½"			6 lbs
		CSH05FL12**	CSH05	5 ⅛"	2 ½"	13"	9–12"	4 lbs
		CSH07FL12**	CSH07	6 ⅛"	4 ½"			5 lbs
		CSH14FL12**	CSH14	13 ⅛"	4 ½"			8 lbs
		CSH05FL18**	CSH05	5 ⅛"	2 ½"	19"	15–18"	5 lbs
		CSH07FL18**	CSH07	6 ⅛"	4 ½"			6 lbs
		CSH14FL18**	CSH14	13 ⅛"	4 ½"			9 lbs
CORNERS	INSIDE	CSH05IC1	CSH05	5 ⅛"	2 ½"	4 ½"	3–3 ½"	2 lbs
		CSH07IC1	CSH07	6 ⅛"	4 ½"	6"	5–5 ½"	4 lbs
		CSH14IC1	CSH14	13 ⅛"	4 ½"	6"	5–5 ½"	6 lbs
	OUTSIDE	CSH05OC1	CSH05	5 ⅛"	2 ½"	1"	0–½"	1 lbs
		CSH07OC1	CSH07	6 ⅛"	4 ½"			2 lbs
		CSH14OC1	CSH14	13 ⅛"	4 ½"			4 lbs
	CONDUIT	SHCC05	CSH05	-	2 ⅝"	2 ½"	-	4 lbs
		SHCC07	CSH07	-	-	-	-	5 lbs
		SHCC14	CSH14	-	3 ⅝"	3"	-	5 lbs
STAND-OFF BRACKETS		SO1	CSH05	4 ¾"	¾"	3"	-	1 lbs
		SO2	CSH07	6 ¾"	¾"	3"	-	1 lbs

All steel convectors come standard with end caps. All pedestal style steel convectors come standard with pedestals. Outlet Mesh: Price per foot. 14-Gauge Front Cover: add 10% to heater price. Standard color included in base price. Other colors available. See paint policy page for information on custom paint colors. Maximum of 250 watts per ft. on front outlet models. When ordering, specify heater catalog number, voltage, phase, suffix catalog number for built-in controls, color, and options. 2. If color is not specified, front covers will be Beige. Front outlet models available only in 14 in. height and 125, 188 and 250 Wt./Ft. configuration. Outlet mesh is not available on front outlet models..

*Additional length the accessory adds to the total installation length. **Built-in duplex receptacle available. Add model numbers suffix "-1" for bottom inlet - top outlet; add suffix "-3" for bottom inlet - front outlet.

Typical Installation

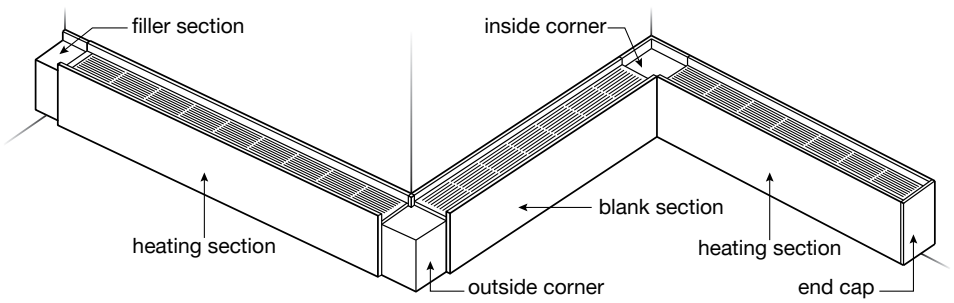

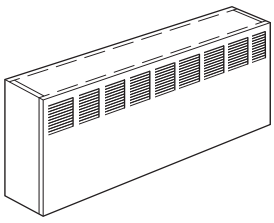

Front Outlet Model
Front outlet is available on Catalog No. CSH14 heaters only, in 125, 188, and 250 watts/foot configuration. Outlet mesh is not available on front outlet models.