470 Beauty Spot Rd. E
Bennettsville, SC 29512

SUBMITTAL SHEET
CWH1000 SERIES
COMMERCIAL FAN-FORCED SMALL WALL HEATER

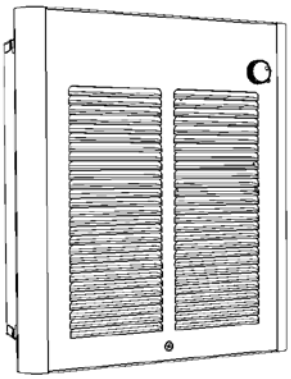

CAPACITIES
500, 562, 750, 1000, 1125, 1500, 1800 or 2000 Watts 120, 208, 240 or 277V 1Ø Only Thermostat Range: 40° – 90° F Air Movement: 65 CFM

See Selection Chart for all Options

JOB NAME: _____

LOCATION: _____

ARCHITECT: _____

ENGINEER: _____

CONTRACTOR: _____

SUBMITTED BY: _____ DATE: _____

TAG/ITEM	QTY.	CATALOG NUMBER	HEATER			AMPS	WEIGHT
			WATTS	VOLTS	Ø		

ACCESSORIES AND CONTROLS	TAG/ITEM	QTY.	CATALOG NUMBER	DESCRIPTION

SUBMITTED BY:	DATE

APPROVED BY:	DATE

CWH1000 SERIES – **COMMERCIAL FAN-FORCED SMALL WALL HEATER**

ARCHITECT'S AND ENGINEER'S SPECIFICATIONS*

The heating equipment shall include an electric automatic fan-forced air heater suitable for small area heating, as manufactured by QMark,® a Marley Engineered Products® Brand, Bennettsville, SC. The heater shall be designed for wall mount, recess or surface. Heaters shall be cETLus listed.

BACK BOX: The back box shall be designed as a recessed rough-in box in either masonry or frame installations and is also used when surface mounting frames are used in surface mounting installations. The back box shall be heavy gauge galvanized steel and shall contain knockouts through which power leads enter.

INNER FRAME ASSEMBLY: The heater assembly, which fits into the back box, shall consist of a heavy gauge steel fan panel to which all of the operational parts of the heater are mounted. The inner frame assembly shall be completely prewired.

HEATING ELEMENT: The heating element shall be of the non-glowing design consisting of an 80/20 nickel-chromium resistance wire enclosed in a steel sheath to which plate fins are copper brazed. The element shall cover the entire air discharge area to ensure uniform heating of all discharged air. It shall be warrantied for 5 years.

ON/OFF SWITCH: A double-pole, single throw on/off switch shall be mounted on the back-box for positive disconnect of power supply. It will be completely concealed behind the front cover.

MOTOR AND CONTROLS: The fan motor shall be impedance protected, permanently lubricated. Fan control shall be of the bi-metallic, snap-action type and shall activate fan after heating element reaches operating temperature, and continue to operate the fan after the thermostat is satisfied and until all heated air has been discharged. The thermostat shall be single-pole type on all models. Thermal cutout shall be self-hold (manual-reset) type designed to shut off heat in the event of overheating. The fan shall be four-bladed aluminum. A backup (End-of-Life) thermal fuse shall be provided for additional safety.

SURFACE MOUNTING FRAME: The surface mounting frame shall be of heavy gauge steel designed to mount around the back box for a finished surface installation. Slot knockouts shall be provided for power supply conduit.

FRONT COVER: The louvered front cover shall be of heavy gauge steel with a powder paint finish. A plug button will be provided to replace the thermostat knob and render the unit tamper-resistant.

FINISH: All sheet metal parts, except the galvanized steel back box, shall be phosphatized, then completely painted by a powder paint process.

**QMark reserves the right to change specifications without prior notice.*

Approvals: _____ _____ _____

Models & Specifications:

ITEM INFORMATION				ELECTRICAL DATA					
WHITE GRILLE		ARCHITECTURAL GRILLE*		VOLTS	PHASE	WATTS	AMPS	BTU/HR.	SHIP WT.
CATALOG NO.	UPC	CATALOG NO.	UPC						
CWH1151DSF	685360163901	CWH1151DSAF	685360162980	120	1	1500/750	12.5/6.25	5120/2560	12 lbs
CWH1202DSF	685360163963	CWH1202DSAF	685360163062	240	1	2000/1000	8.3/4.2	6826/3413	12 lbs
				208	1	1500/750	7.2/3.6	5120/2560	12 lbs
CWH1207DSF	685360163987	CWH1207DSAF	685360163086	277	1	2000/1000	7.2/3.6	6826/3413	12 lbs
				240	1	1500/750	6.25/3.2	5120/2560	12 lbs
CWH1208DSF	685360164007	CWH1208DSAF	685360163048	208	1	2000/1000	9.6/4.8	6826/3413	12 lbs
CWH1101DSF	685360163888	CWH1101DSAF	685360162966	120	1	1000/500	8.4/4.2	3413/1706	12 lbs
CWH1157DSF	685360163925	CWH1157DSAF	685360163000	277	1	1500/750	5.4/2.7	5120/2560	12 lbs
				240	1	1125/562	4.7/2.4	3840/1920	12 lbs
CWH1201DSF	685360163949	CWH1201DSAF	685360163024	120	1	1800	15	6143	12 lbs

Optional Accessories:

CATALOG NO.	UPC	DESCRIPTION	COLOR	SHIP WT.
SMFS	685360174402	Surface Mounting Frame. Order Separately. 12 ½" H x 10 ⅜" W x 4" D	White	3 lbs
CWHSMAG	685360148526	Surface Mounting Frame. Order Separately. 12 ½" H x 10 ⅜" W x 4" D	Bronze	3 lbs
SMFS1	685360174419	1 in. Semi-Recess Mounting Frame, 12 ½" H x 10 ⅜" W x 1" D	White	3 lbs
CWHS1AG	685360148533	1 in. Recess Mounting Frame. Order Separately	Bronze	3 lbs
SMFS2	685360174426	2 in. Semi-Recess Mounting Frame, 12 ½" H x 10 ⅜" W x 2" D	White	3 lbs
CWHS2AG	685360148540	2 in. Recess Mounting Frame. Order Separately	Bronze	3 lbs
SRAFCTPF	685360164977	Tamper-Resistant Front Cover	White	1 lbs

Dimensions and Clearances:

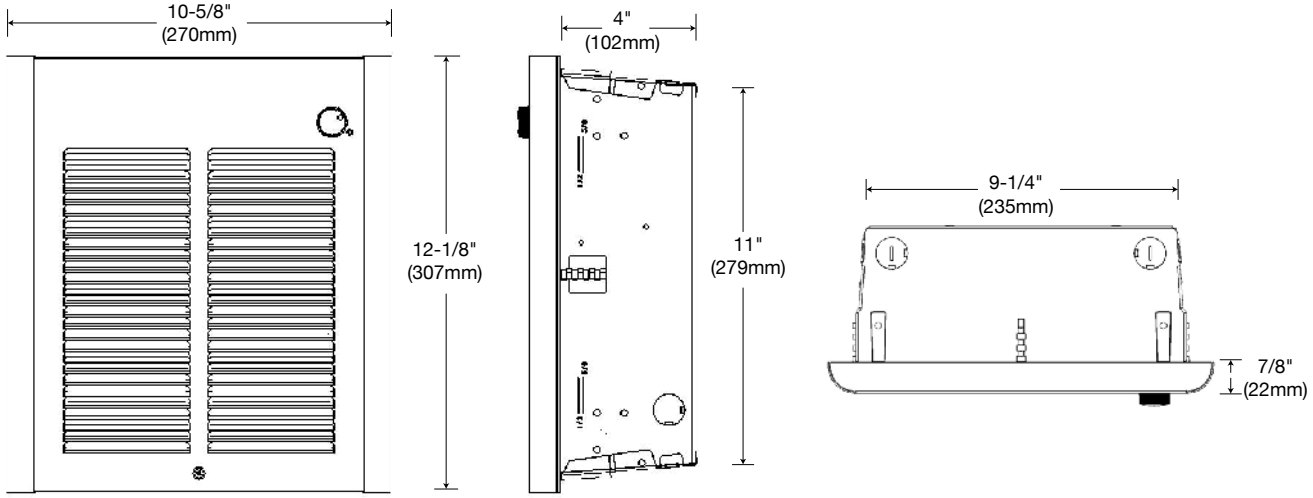

No matter the industry or application, Marley Engineered Products has a robust portfolio of innovative, reliable, high-performance comfort heating and ventilation solutions for all your heating needs.

For more information or assistance on your next project, contact Technical Services at 800-642-4328

Scan the QR code to access additional specs and features

Approvals: _____ _____ _____