PRODUCT SUBMITTAL SHEET

QMARK® A Marley Engineered Products Brand

Capacities
500, 562, 750, 1000, 1125, 1500, 2000 Watts 120, 208, 240 or 277V 1Ø only Thermostat Range: 40° - 90° F Air Movement: 65 CFM MAX

CWH ARCHITECTURAL SERIES FAN-FORCED WALL HEATERS

Job Name: _____

Location: _____

Architect: _____

Engineer: _____

Contractor: _____

Submitted By: _____

Date: _____

Submitted By:	Date:
Approved By:	**Date:**

Item	QTY	Catalog Number	Tag	Watts	Volts	PH	AMPS	Weight

ACCESSORIES

Item	QTY	Part Number	Tag

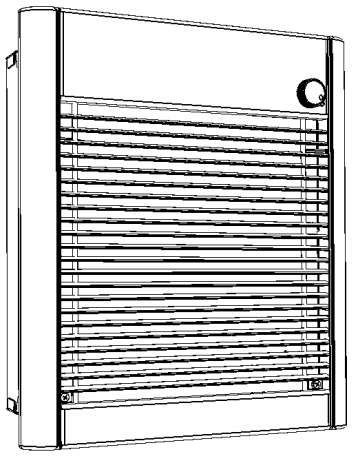

Marley® Engineered Products

470 Beauty Spot Road East
Bennettsville, South Carolina 29512
www.marleymep.com

ZSS-QSWHO | 9 - 2015

INTERTEK ETL LISTED C US

Conforms to ANSI/UL2021 and CSA C22.2, No. 46

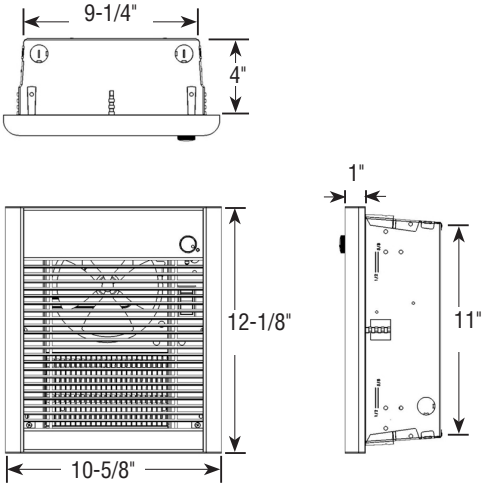

SELECTION CHART

CATALOG NUMBER	VOLTS	AMPS	WATTS	BTU/HR.	WIRE SIZE
CWH1101DSAF	120	8.4	1000	3413	14 AWG
		4.2	500	1706	
CWH1151DSAF	120	12.5	1500	5120	12 AWG
		6.25	750	2560	
CWH1201DSAF	120	15	1800	6143	12 AWG
CWH1202DSAF	240	8.4	2000	6826	14 AWG
		4.2	1000	3413	
	208	7.3	1500	5120	
		3.61	750	2560	
CWH1207DSAF	277	7.3	2000	6826	14 AWG
		3.61	1000	3413	
	240	6.25	1500	5120	
		3.2	750	2560	
CWH1157DSAF	277	5.5	1500	5120	14 AWG
		2.75	750	2560	
	240	4.7	1125	3840	
		2.35	562	1920	
CWH1208DSAF	208	9.6	2000	6826	14 AWG
		4.8	1000	3413	

CATALOG NUMBER	DESCRIPTION
CWHSMAG	Surface Mounting Frame (Accessory). Order separately. 12-1/2”H x 10-3/8”W x 4”D - Bronze
CWHS1AG	1” Semi-recess Mounting Frame, 12-1/2”H x 10-3/8”W x 1”D - Bronze
CWHS2AG	2” Semi-recess Mounting Frame, 12-1/2”H x 10-3/8”W x 2”D - Bronze

ARCHITECT’S AND ENGINEER’S SPECIFICATIONS

The heating equipment shall include an electric automatic fan forced air heater suitable for small area heating, as manufactured by QMark®, A Marley Engineered Products Brand, Bennettsville, SC. The heater shall be designed for wall mounting, recess or surface. Heaters shall be UL listed or equivalent (ETL).

BACKBOX: The backbox shall be designed for duty as a recessed rough-in box in either masonry or frame installations and is also used with the surface mounting frame in surface mounting installations. The backbox shall be heavy gauge galvanized steel and shall contain knockouts through which power leads are brought.

INNER FRAME ASSEMBLY: The heater assembly which fits into the backbox shall consist of a heavy gauge steel fan panel upon which is mounted all of the operational parts of the heater. The inner frame assembly shall be completely pre-wired.

HEATING ELEMENT: The heating element shall be of the non-glowing design consisting of an 80/20 nickel-chromium resistance wire enclosed in a steel sheath to which plate fins are copper brazed. It shall be warranted for 5 years.The element shall cover the entire air discharge area to ensure uniform heating of all discharge air.

POWER ON/OFF SWITCH: A double-pole single throw ON/OFF switch shall be mounted on the back box for positive disconnect of power supply. It will be completely concealed behind the front cover.

MOTOR AND CONTROLS: The fan motor shall be impedance protected, permanently lubricated and with totally enclosed rotor. Fan control shall be of the bi-metallic, snapaction type and shall activate fan after heating element reaches operating temperature, and continue to operate the fan after the thermostat is satisfied and until all heated air has been discharged. The thermostat shall be single pole type on all models. Manual-reset thermal cutout shall be bi-metallic, snapaction type designed to shut off heat in the event of overheating. The fan shall be four-bladed aluminum.

SURFACE MOUNTING FRAME: The surface mounting frame shall be of heavy gauge steel designed to mount around the backbox for a finished surface installation. Slot knock outs shall be provided for power supply conduit.

FRONT COVER: The louvered front cover shall be of heavy gauge steel with a polyester powder coat finish. A plug button will be provided to replace the thermostat knob and render the unit tamper-resistant.

FINISH: All sheet metal parts, except the galvanized steel backbox, shall be phosphatized, then completely painted by a powder paint process.

*QMark reserves the right to change specifications without prior notice.