470 Beauty Spot Rd. E
Bennettsville, SC 29512

SUBMITTAL SHEET
CPH SERIES

COMMERCIAL PEDESTAL STEEL CONVECTOR

See Selection Chart for Options

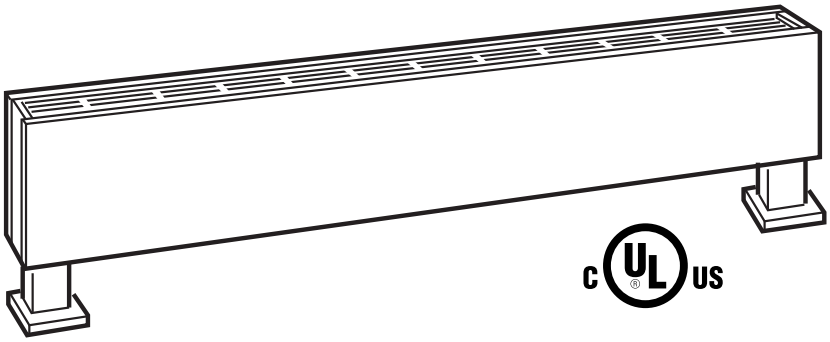

JOB NAME: _____

LOCATION: _____

ARCHITECT: _____

ENGINEER: _____

CONTRACTOR: _____

SUBMITTED BY: _____ DATE: _____

TAG/ITEM	QTY.	CATALOG NUMBER	HEATER			AMPS	LENGTH	NUMBER OF ELEMENTS	BUILT-IN CONTROLS
			KW	VOLTS	Ø				

ACCESSORIES AND CONTROLS	TAG/ITEM	QTY.	CATALOG NUMBER	DESCRIPTION

SUBMITTED BY:	DATE

APPROVED BY:	DATE

ARCHITECT'S AND ENGINEER'S SPECIFICATIONS*

Heaters shall be low profile (3" x 5 ½", 5" x 7") and available in lengths from 28 inches through 10 feet.

Enclosures shall be 16-gauge, furniture quality steel with reinforced, all welded construction; designed to withstand heavy-duty commercial and institutional use.

Enclosures shall be chemically-treated to resist corrosion. Finish shall be mar and temperature-resistant to retain contemporary appearance throughout years of rough use.

For safety, the electric heating bank shall consist of metal sheath heating elements. The elements shall have a copper clad steel sheath for strength and corrosion resistance, and aluminum fins for faster heat transfer.

One, two or three, low density elements shall be installed side-by-side on the same plane to uniformly warm all incoming air. Elements shall be center-anchored and shall float freely on each end through nylon bushings for quietness.

Discharge louvers shall be closely spaced steel to direct heat away from wall and to minimize wall surface temperatures and control dirt streaking.

A ¼ inch mesh screen shall be installed beneath the discharge grille to deter the insertion of foreign objects.

Optional built-in controls shall include single-pole, double-pole or two-stage thermostats, disconnect switch, transformer relay and power relay. The thermostat shall be capable of controlling multiple units on a pilot duty circuit. (Observe the control limitations indicated.) Thermostat adjustment shall be with a thin-bladed screwdriver through the discharge louvers and shall be considered tamper-resistant.

An automatic reset thermal overheat protector shall run the full-length of the heater and shall turn off heating elements should overheating occur at any point along heating length. Overheat protector shall restore operation automatically when cause of overheating is removed.

Pedestal legs shall be architecturally styled and shall be individually adjustable to insure an even, level heater installation.

Heaters shall be designed with a built-in prewired race-way to enable multiple unit wiring from one feeder source.

Back panel shall be one piece heavy gauge painted steel, completely finished, and shall be suitable for mullion-to-mullion mounting in front of a glass curtain wall.

28-inch control sections, finished to match the heating units, shall be available with factory built-in mercury contactors, circuit breakers, control transformer, P.E. switch or SCR controls. This control section shall also be furnished blank, as an optional accessory, for field installation of controls.

All heaters and electrical accessories shall be labeled by Underwriters' Laboratories, Inc.

Accessories shall include end caps, blank sections. Blank sections shall be completely enclosed to enable the installer to pull standard wiring from heater to heater through the accessories.

**QMark reserves the right to change specifications without prior notice.*

APPLICATION LIMITATIONS AND PRECAUTIONS

Hazardous Atmosphere: Because the possibility of a concealed spark can exist from the built-in over-head cutout, heaters should not be used in potentially explosive atmospheres.

Corrosive Atmosphere: The high quality finish and steel internal sheet metal parts will give excellent service under most operating conditions, including coastal salt air and industrial atmospheres. However, the finish is not intended for direct salt spray exposure in marine application or highly corrosive greenhouse, swimming pool, chemical storage or industrial atmospheres.

Cleanliness: Although specifically designed for mounting below window areas, heaters can be installed on plaster, wood paneled, metal, masonry or composition wall surfaces with reasonable expectation of clean wall operation. Should some soiling occur, after a period of years, smooth walls may be cleaned with standard maintenance materials. For deep textured walls, consideration should be given to choice of enclosure height and watt per foot capacity—generally, the enclosure with lowest surface temperature will have the least soiling tendency.

Comfort: Optimum room comfort results when heater is mounted just below the window sill, since window cold down draft is eliminated and maximum convection air distribution without stratification is maintained throughout the room. Because of the tendency for warm air to stratify, installing heaters close to the ceiling is not recommended. If it should be necessary, at least 18" clearance above the air discharge must be maintained. Bottom of heaters are not intended for attractive appearance when mounted above eye level.

Air Throw: Since heaters provide only natural convection air throw, they are not recommended for combating cold outside air blasts through high traffic, main entry ways and vestibules. Heaters will maintain satisfactory comfort conditions in low traffic, side entry ways and vestibules, but for most entry ways, faster response fan driven heaters would be preferred.

Curtains, drapes or blinds should clear the top of the heater by at least six inches. See I for vinyl blinds. Never permit draperies to completely cover the unit.

Furniture should be placed so it does not touch the heater and so it does not completely block the air vents. Allow at least 4" free space between furniture and the heaters.

Recess mounting: UL labeled for free standing wall surface mounting only. Not recommended for mounting behind built-in book shelves, storage cabinets, window seats, etc.

In institutional applications such as hospitals, nursing homes, child day-care centers and clinics, it is recommended that low-watt density convectors be used to provide optimum comfort at lowest case temperatures.

Due to variations in vinyl compositions and their potential to discolor, the use of stand-off brackets (SO1 or SO2) and/or specifying the lower watt density unit may be required when installing on vinyl wall-coverings or under vinyl window dressings.

Prior to setting specifications, consult factory for installation recommendations.

Approvals: _____ _____ _____

5 ½" x 3" — Single Element

Lengths

Length	28"	3′	4′	5′	6′	8′	10′
Shipping Weight	11 lbs	15 lbs	18 lbs	25 lbs	29 lbs	38 lbs	47 lbs

NOTE: All models are NON-STOCK, MADE-TO-ORDER. When ordering, specify quantity, catalog number, voltage, wattage, optional controls, and color. Consult sales representative for lead times.

Watts per Ft.*

125	188
250	

*Specs vary by length. Refer to the submittal sheet for full details.

Voltages*

120	208	240
277	347	600

7" x 5" — Multiple Elements

Available Length

Length	28"	3′	4′	5′	6′	8′	10′
Shipping Weight	11 lbs	15 lbs	18 lbs	25 lbs	29 lbs	38 lbs	47 lbs

NOTE: All models are NON-STOCK, MADE-TO-ORDER. When ordering, specify quantity, catalog number, voltage, wattage, optional controls, and color. Consult sales representative for lead times.

Watts per Ft.*

1 Element*	125	188	250
2 Elements*	375	500	
3 Elements*	564	625	750

*Specs vary by length. Refer to the submittal sheet for full details.

Voltages*

Single Phase*	208	240	277
	347	600	
Three Phase*	208	240	600

Optional Accessories:

	CATALOG NO.	DESCRIPTION	COMPATIBLE WITH	SHIP WT.
BLANK SECTIONS	CPH05BL21	28-Inch Blank Section	CPH05A Heaters	10 lbs
	CPH05BL31	3-Foot Blank Section		13 lbs
	CPH05BL41	4-Foot Blank Section		17 lbs
	CPH05BL51	5 Foot Blank Section		21 lbs
	CPH05BL61	6-Foot Blank Section	CPH05A Heaters	25 lbs
	CPH05BL81	8-Foot Blank Section		32 lbs
	CPH05BL101	10-Foot Blank Section		42 lbs
	CPH07BL21	28-Inch Blank Section	CPH07A Heaters	14 lbs
	CPH07BL31	3-Foot Blank Section		18 lbs
	CPH07BL41	4-Foot Blank Section		24 lbs
	CPH05BL51	5 Foot Blank Section		30 lbs
	CPH07BL61	6-Foot Blank Section	CPH07A Heaters	36 lbs
	CPH07BL81	8-Foot Blank Section		48 lbs
	CPH07BL101	10-Foot Blank Section		60 lbs
PEDESTAL LEG KITS	PHB052	Pedestal Leg Kit for 2, 3 & 4 ft. units (quantity 3)	Legs must be ordered with CPH05A Heaters/Blanks	3 lbs
	PHB053	Pedestal Leg Kit for 5, 6 & 8 ft. units (quantity 3)		4 lbs
	PHB054	Pedestal Leg Kit for 10 ft. unit (quantity 4)		5 lbs
	PHB072	Pedestal Leg Kit for 2, 3 & 4 ft. units (quantity 2)	Legs must be ordered with CPH07A Heaters/Blanks	4 lbs
	PHB073	Pedestal Leg Kit for 5, 6 & 8 ft. units (quantity 3)		5 lbs
	PHB074	Pedestal Leg Kit for 10 ft. unit (quantity 4)		7 lbs
END CAPS RIGHT	CSH05ECR	Right Hand End Cap	CPH05A/07A Heaters/Blanks	1 lbs
	CSH07ECR	Right Hand End Cap		1 lbs
END CAPS LEFT	CSH05ECL	Left Hand End Cap	CPH05A/07A Heaters/Blanks	1 lbs
	CSH07ECL	Left Hand End Cap		1 lbs

All steel convectors come standard with end caps. All pedestal style steel convectors come standard with pedestals. Outlet Mesh: Price per foot. 14-Gauge Front Cover: add 10% to heater price. Standard color included in base price. Other colors available. See paint policy page for information on custom paint colors. If color is not specified, front covers will be Beige. Back, grille, and accessories will be statuary bronze. When ordering, specify heater catalog number, voltage, phase, suffix catalog number for built-in controls, color, and options. Specify color for pedestal legs.

See Convector Heater Controls page for Optional Controls.

Approvals: _____ _____ _____

Dimensions and Clearances:

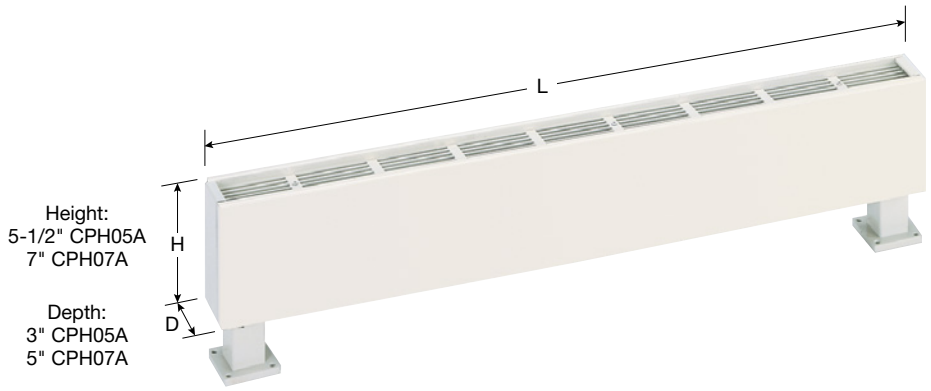

PEDESTAL DETAILS

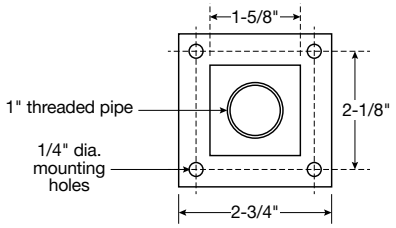

5-1/2 IN. HEATER PEDESTAL

PEDESTAL LOCATION

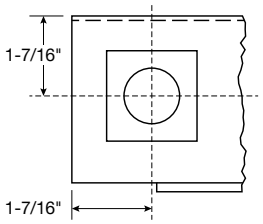

BOTTOM OF 5-1/2 IN. HEATER

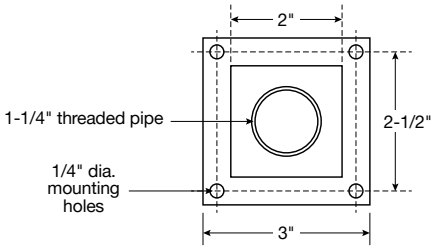

7 IN. HEATER PEDESTAL

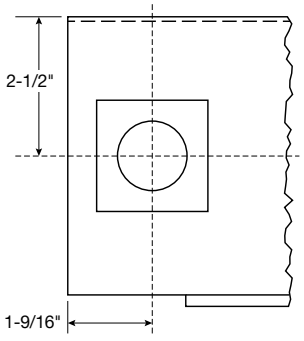

BOTTOM OF 7 IN. HEATER

SURFACE MOUNTED

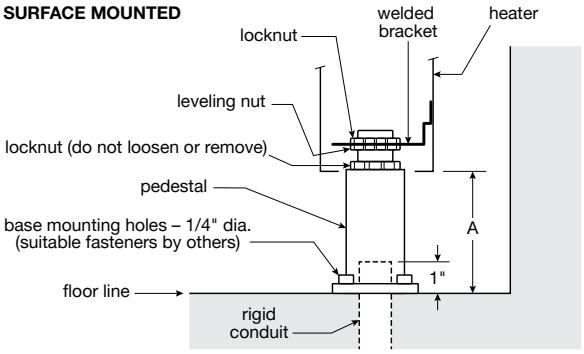

IMBEDDED IN FLOOR

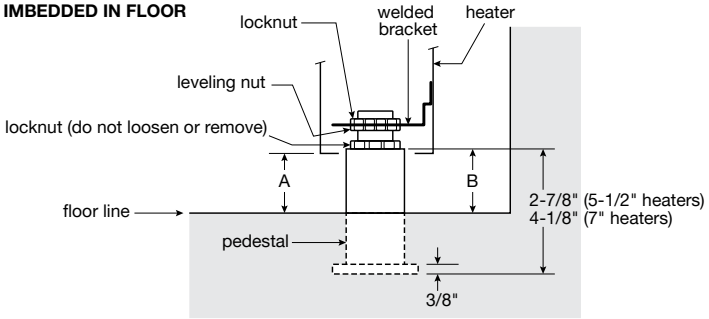

Approvals: _____ _____ _____

CPH SERIES

How to Order

Example:

CPH07	06	250	20	1	B	T	L	0	00000	-	A	6	Y	3	C

- **CPH07**: Model: **CPH05**, **CPH07**
- **06**: Nominal Heater Length: **02** = 2.3′ (28″), **03** = 3′ (36″), **04** = 4′ (48″), **05** = 5′ (60″), **06** = 6′ (72″), **08** = 8′ (96″), **10** = 10′ (120″)
- **250**: Watts/ft: **125**, **188**, **250**, **375**, **500**, **564**, **625**, **750**
- **20**: Voltage*: **12** = 120V **20** = 208V, **24** = 240V, **27** = 277V, **34** = 347V, **60** = 600V
- **1**: Phase: **1** = 1P, **3** = 3P
- **B**: Air Inlet: **B** = Bottom Inlet (standard), **F** = Front Inlet/Dual Inlet
- **T**: Air Discharge: **T** = Top (standard), **F** = Front
- **L**: Incoming Power Hand: **R** = Right hand, **L** = Left hand
- **0**: Control Voltage**: **0** = N/A, **L** = Line, **2** = 24VAC
- **00000**: Control Packages**: Standard: **00000** = None, **000X0** = TR, **00P00** = 1PR, **0D000** = DS, **0D0X0** = DS-TR, **P0000** = 2T, **PD000** = 2T-DS, **T0000** = T, **TD000** = T-DS Custom Charge: **00R00** = 2PR, **0C000** = 2DS, **PC000** = 2T-2DS, **S0000** = 2ST, **T0P00** = T-1PR
- **-**
- **A**: Finishes & Color: **A** = Aluminum, **B** = Black, **G** = Charcoal Grey, **N** = Beige, **S** = Bronze, **U** = Custom***, **W** = White
- **6**: Front Cover Material: **6** = 16 GA Front Cover (standard), **4** = 14 GA Front Cover
- **Y**: Outlet Mesh: **N** = None, **Y** = Mesh
- **3**: Accessory Options: **1** = Pedestals Only, **2** = End Caps Only, **3** = No End Caps or Pedestals
- **C**: Product Generation: **C**

*Standard voltage and phase combinations include 121, 201, 203, 241, 271. Other options available under extended offering. Please contact Marley Technical Service for more details.

**Other options available under extended offering. Please contact Marley Technical Service for more details.

***Custom finishes will require an actual paint/finish sample and finish confirmation prior to order acceptance.

Contact Marley Sales Representative for additional configuration details

No matter the industry or application, Marley Engineered Products has a robust portfolio of innovative, reliable, high-performance comfort heating and ventilation solutions for all your heating needs.

For more information or assistance on your next project, contact Technical Services at 800-642-4328

Scan the QR code to access additional specs and features

Approvals: _____ _____ _____