470 Beauty Spot Rd. E
Bennettsville, SC 29512

SUBMITTAL SHEET
CDF SERIES

COMMERCIAL DOWNFLOW CEILING HEATER

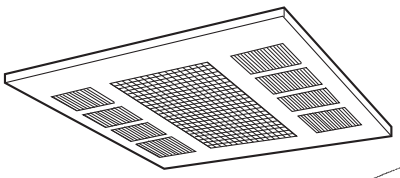

Recessed Mount

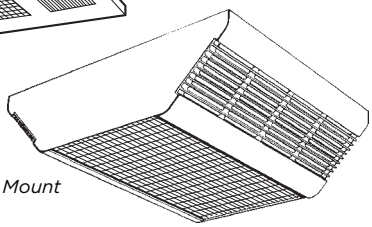

Surface Mount

CAPACITIES
4KW: Field convertible to 3KW or 2KW
5KW: Field convertible to 3.8KW or 2.5KW
208V, 1Ø or 3Ø, 240V, 1Ø or 3Ø 277V, 1Ø Thermostat Range: 45°–90° F Air Movement: 300 CFM

See Selection Chart for all Options

JOB NAME: _____

LOCATION: _____

ARCHITECT: _____

ENGINEER: _____

CONTRACTOR: _____

SUBMITTED BY: _____ DATE: _____

TAG/ITEM	QTY.	CATALOG NUMBER	HEATER			AMPS	CONTROL CKT. VOLTS	MOTOR RPM	AIR FLOW		BUILT-IN CNTRL.
			KW	VOLTS	Ø				CFM	F° RISE	

ACCESSORIES AND CONTROLS	TAG/ITEM	QTY.	CATALOG NUMBER	DESCRIPTION

SUBMITTED BY:	DATE

APPROVED BY:	DATE

CDF SERIES – COMMERCIAL DOWNFLOW CEILING HEATER

ARCHITECT'S AND ENGINEER'S SPECIFICATIONS*

The heating equipment shall include an electric, ceiling-mounted type CDF Series 500 fan-forced air heater suitable for large area heating as manufactured by QMark,® a Marley Engineered Products® Brand, Bennettsville, SC. Heater shall be cULus listed.

The heater shall be designed for surface, recess, or T-Bar mounting. For surface mounting, a QMark CDFSE surface enclosure shall be used. For T-Bar mounting, a QMark CDFRE recess enclosure shall be used. For recessed mounting in a permanent ceiling, a QMark CDFRE recess enclosure and CDFTK trim kit shall be used.

The heaters shall be factory wired for single-phase operation and field convertible to three-phase operation by removing one jumper wire.

The heaters should be factory wired for full wattage and field convertible to 75% or 50% wattage by the removal of one or two wires respectively.

HEATER SECTION: The heater section shall consist of a 20 gauge steel chassis on which are mounted the heating elements, fan motor and blade, fan control, thermal cutout, and 3-pole contactor. Heater section shall be completely prewired.

HEATER ELEMENTS: The heating elements shall be warrantied for five years and shall be of non-glowing design consisting of 80/20 NiCh resistance wire, enclosed in a steel sheath, to which steel plate fins are brazed. The elements shall cover the entire air intake area to ensure uniform heating of all discharged air.

MOTOR AND CONTROLS: The fan motor shall be impedance-protected, permanently lubricated, and with totally-enclosed rotor. Fan control shall be bi-metallic, snap-action type and shall activate the fan immediately and continue to operate the fan after the thermostat is satisfied and until all heated air has been discharged. Thermal cutout shall be bi-metallic snap-action type designed to automatically shut off the heater in the event of overheating and reactivate the heater when temperature returns to normal.

OPERATIONAL CONTROLS: Thermostat, disconnect switch, and all interlock relays shall be installed within the heater enclosure.

RECESS ENCLOSURE: The back box shall be designed for duty as a recessed rough-in box in masonry, T-Bar, or frame ceiling construction. The back box shall be 20 gauge galvanized steel and shall contain knockouts through which field wiring leads are brought. Enclosures to recess into a maximum 7 inches of ceiling space.

The louvered recess faceplate shall be of 20 gauge cold rolled steel, phosphatized, then electrostatically painted White by a baked enamel process.

SURFACE ENCLOSURE: The surface mounting plate shall be designed for duty as a rough-in box on masonry, T-Bar, or frame ceiling construction. The surface mounting plate shall be 20 gauge galvanized steel and shall contain knockouts through which field wiring leads are brought. Enclosure to extend a maximum of 6 inches into the heated space.

The louvered surface wrapper shall be contoured aluminum extrusion and 20 gauge sheet metal combination with rounded corners. The surface wrapper shall be electrostatically painted Beige or White by a baked enamel process.

**QMark reserves the right to change specifications without prior notice*

Approvals: _____ _____ _____

Models & Specifications:

ITEM INFORMATION			ELECTRICAL DATA					
CATALOG NO.	UPC	MOUNTING	KW	BTU/HR.	AMPS	VOLTS	PHASE	SHIP WT.
CDF548	685360015101	Heater Section Only	4/3/2	13.7/10.2/6.8	19.2/14.2/9.6	208	1-3	27 lbs
CDF542	685360015088	Heater Section Only	4/3/2	13.7/10.2/6.8	16.7/12.5/8.3	240	1-3	27 lbs
CDF547	685360015095	Heater Section Only	4/3/2	13.7/10.2/6.8	14.4/10.8/7.2	277	1	27 lbs
CDF558	685360015132	Heater Section Only	5/3.8/2.5	17.1/13/8.5	24/18.3/12	208	1-3	27 lbs
CDF552	685360015118	Heater Section Only	5/3.8/2.5	17.1/13/8.5	20.8/15.8/10.4	240	1-3	27 lbs
CDF557	685360015125	Heater Section Only	5/3.8/2.5	17.1/13/8.5	18.1/13.7/9	277	1	27 lbs

Models & Specifications – Packaged Options:

ITEM INFORMATION			ELECTRICAL DATA					
CATALOG NO.	UPC	MOUNTING	KW	BTU/HR.	AMPS	VOLTS	PHASE	SHIP WT.
CDF542RE	685360186030	Recessed Mount	4/3/2	13.7/10.2/6.8	16.7/12.5/8.3	240	1–3	37 lbs
CDF542SE	685360186047	Surface Mount	4/3/2	13.7/10.2/6.8	16.7/12.5/8.3	240	1–3	27 lbs
CDF547RE	685360152745	Recessed Mount	4/3/2	13.7/10.2/6.8	14.4/10.8/7.2	277	1	37 lbs
CDF547SE	685360152752	Surface Mount	4/3/2	13.7/10.2/6.8	14.4/10.8/7.2	277	1	27 lbs
CDF548RE	685360152769	Recessed Mount	4/3/2	13.7/10.2/6.8	19.2/14.2/9.6	208	1–3	37 lbs
CDF548SE	685360152776	Surface Mount	4/3/2	13.7/10.2/6.8	19.2/14.2/9.6	208	1–3	27 lbs
CDF552RE	685360152783	Recessed Mount	5/3.8/2.5	17.1/13/8.5	20.8/15.8/10.4	240	1–3	37 lbs
CDF552SE	685360152790	Surface Mount	5/3.8/2.5	17.1/13/8.5	20.8/15.8/10.4	240	1–3	27 lbs
CDF557RE	685360152806	Recessed Mount	5/3.8/2.5	17.1/13/8.5	18.1/13.7/9	277	1	37 lbs
CDF557SE	685360152813	Surface Mount	5/3.8/2.5	17.1/13/8.5	18.1/13.7/9	277	1	27 lbs
CDF558RE	685360152820	Recessed Mount	5/3.8/2.5	17.1/13/8.5	24/18.3/12	208	1–3	37 lbs
CDF558SE	685360152837	Surface Mount	5/3.8/2.5	17.1/13/8.5	24/18.3/12	208	1–3	27 lbs

NOTE: Factory-wired for highest wattage, field-convertible to lower wattages. Factory-wired 1-PH, field convertible to 3-PH dual-phase units, maximum amp draw is listed. Amperage shown is for single phase.

Optional Accessories – Electronic / Control Options:

CATALOG NO.	UPC	DESCRIPTION	COLOR	SHIP WT.
CDFT	685360015033	Integral thermostat SPST — Range 45 to 95°F	—	1 lbs
CDFDS	685360014968	Disconnect Switch (3-Pole) 30 amps, 600 volts, 3Ø, 60 Hz	—	1 lbs
CDFTR4*	685360015057	208/240V Primary Transformer/24V sec. and 24V holding coil control relay	—	1 lbs
CDFTR7*	685360015064	277V Primary Transformer/24V sec. and 24V holding coil control relay	—	1 lbs

For factory installation of above controls, additional charges apply.
*Optional Power Relays or Integral Thermostats cannot be used when the Transformer Relay Option is chosen
For easy BMS integration, heater, relay, and SmartSeries Plus are needed

Optional Accessories – Mounting Options:

CATALOG NO.	UPC	DESCRIPTION	COLOR	SHIP WT.
CDFSE	685360015019	Surface-mounted enclosure — to be used with above heater section. 20" L x 16 ½" W x 5 ¾" D	Beige	10 lbs
CDFRE	685360014982	Recessed-mounted enclosure — to be used with above heater section. 23 ¾" L x 23 ¾" W x 7" D	Beige	18 lbs
CDFSENW	685360149615	Surface-mounted — to be used with above heater section. 20" L x 16 ½" W x 5 ¾" D	White	10 lbs
CDFRENW	685360149639	Recessed-mounted — to be used with above heater section. 23 ¾" L x 23 ¾" W x 7" D	White	18 lbs
CDFTK	685360015040	Trim Ring for mounting on permanent ceiling (cannot be factory installed)	—	1 lbs
CDFRFK	685360171548	Mounting Bracket Retrofit Kit	—	2.5 lbs

Approvals: _____ _____ _____

Electrical Wiring, Standard Factory Wired Diagram:

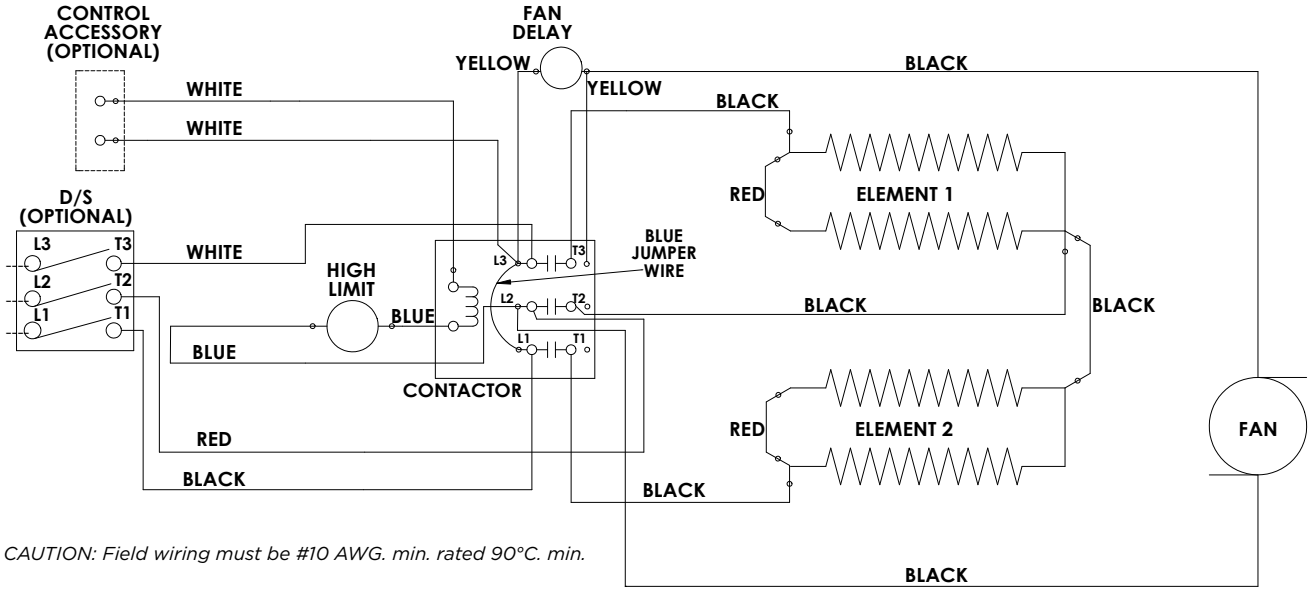

CAUTION: Field wiring must be #10 AWG. min. rated 90°C. min.

Dimensions and Clearances:

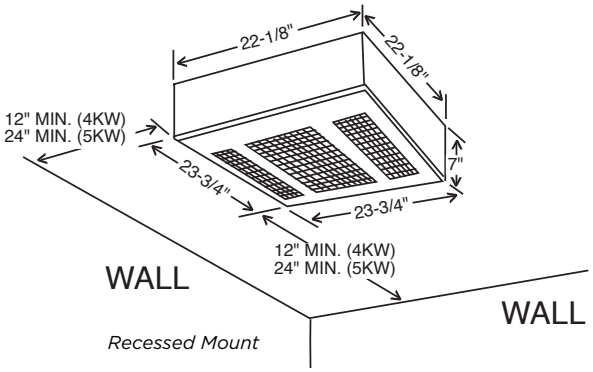

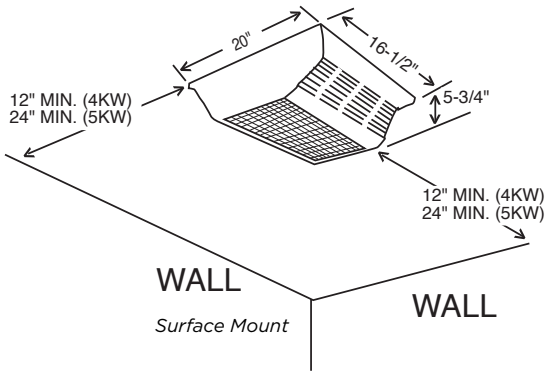

No matter the industry or application, Marley Engineered Products has a robust portfolio of innovative, reliable, high-performance comfort heating and ventilation solutions for all your heating needs.

For more information or assistance on your next project, contact Technical Services at 800-642-4328

Scan the QR code to access additional specs and features

Approvals: _____ _____ _____