DBA & SHA SERIES
Architectural Sill-Height Convector





Ideal Spaces:

Living Rooms
Bedrooms
Offices
Hallways & Lobbies
Condos
Conference Rooms;
Retail Spaces
Floor-to-Ceiling Curtain Walls

White Beige Charcoal Grey

Bronze Black Aluminum

Custom and/or Anodized Colors also Available

- DBA Series is approved for residential applications
- Patented “Stair-Step” SHA heating element design accommodates a multitude of applications and heating needs (see diagram on next page)
- Unique two-piece extruded aluminum “Snap-Lock” closure design secures the one-piece top and front grilles to the one-piece back and bottom providing a rapid, secure fit along the length of the unit
- Front/bottom inlet air grille utilizes slots which create an attractive installation where inlet grille is visible
- Blend into any décor with custom paint and anodizing upon request
- Units can be mounted on floor, wall, or pedestals
- Customize space with wall-to-wall installation, or as discrete units in standard lengths of 28 in. to 12 ft.
- Units are available in a wide range of heating capacities per foot length (see specifications)
- Architectural-style end sections give a finished look when used as a stand-alone or where a wall-to-wall run is not desired
- Inside and outside corners can be ordered factory-cut and mitered to fit difficult or unusual spaces
- Right -or left-hand entry and built-in wireway (equivalent to ¾ in. conduit) with factory-installed wiring
- Full line of trim accessories, including matching blank sections, end caps, filler sections, inside and outside corners, diagonal end sections, and splice plates
- Optional built-in controls include: line-voltage thermostat; two-stage thermostat; on/off switch; transformer relay; power relay and pneumatic/switch
- Easy connection of supply wiring from bottom, rear or end, as well as multiple wiring of adjacent heaters from one entry point
- Thermal limit switch with linear type (full length) sensing bulb provides constant protection against overheating. Switch will automatically reset when normal operating temperatures are restored
- Discharge air openings in top grille are punched slots which are pencil-proof for safety

c UL us

5 YEAR WARRANTY ELEMENT

1 YEAR WARRANTY WORKMANSHIP

DBA & SHA SERIES
Architectural Sill-Height Convector

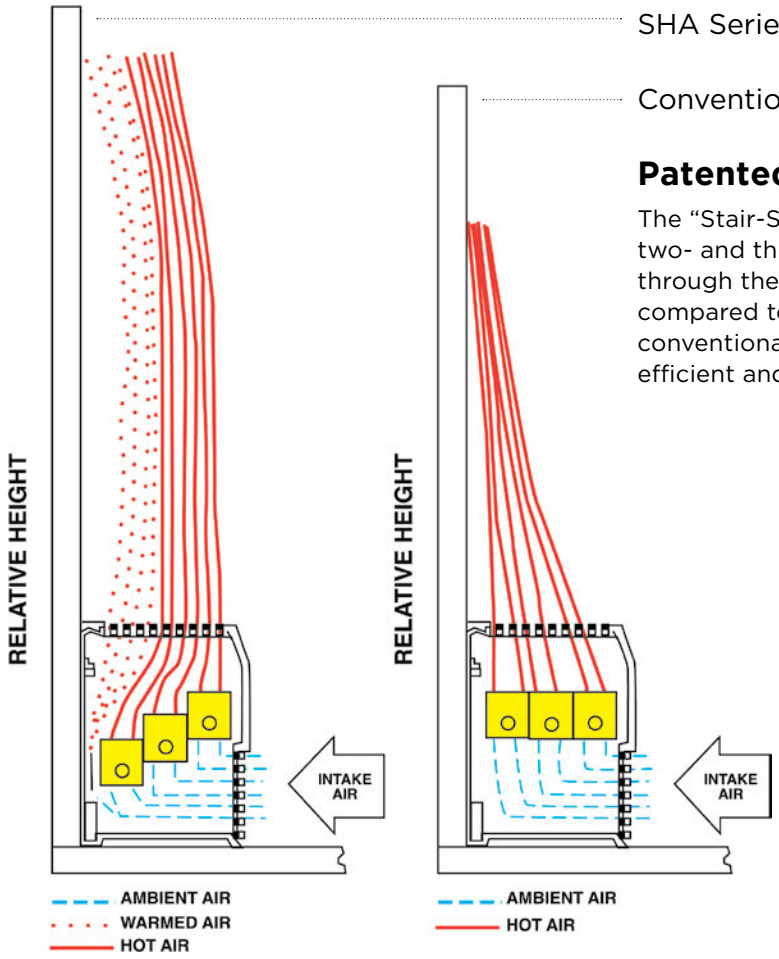

Patented Stair-Step Design

The "Stair-Step" patented design of heating elements of two- and three-element heaters controls the flow of air through the heater resulting in cooler wall temperatures compared to side-by-side arrangements of elements in conventional heaters. This unique design provides a more efficient and effective distribution of heat.

Dimensions and Clearances:

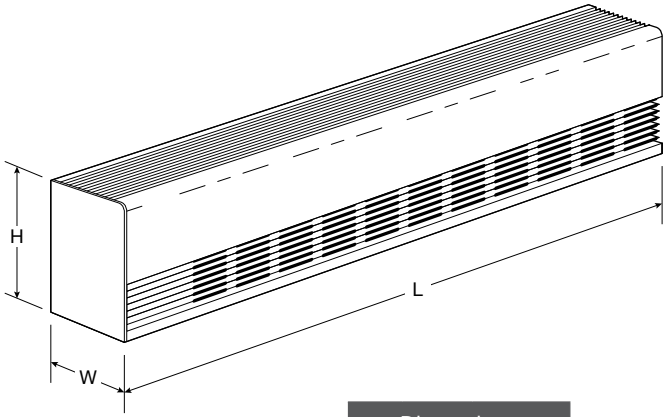

	Dimensions		
Cat. No.	H	W	L
DBA	6″	3 ⅝″	28″–12′
SHA	7″	5 ⅝″	28″–12′

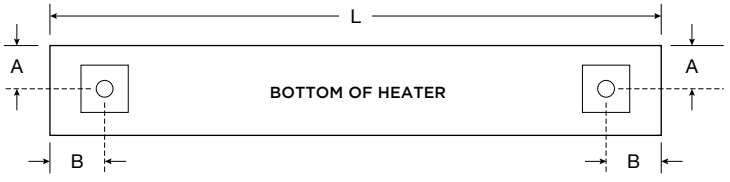

	Standard Pedestal Placement	
Cat. No.	A	B
DBA	2″	2 ¼″
SHA	2 13⁄16″	2 ¼″

DBA & SHA SERIES
Architectural Sill-Height Convector

DBA & SHA (1 Element) Lengths

Length	28″	3′	4′	5′	6′	7′	8′	9′	10′
Shipping Weight	8 lbs	10 lbs	13 lbs	17 lbs	20 lbs	24 lbs	27 lbs	30 lbs	33 lbs

NOTE: Custom length cabinets are priced with heater and blank to the next larger size. Backs are provided standard with no finish. For finished backs, add 10% to list price. Knockouts on back omitted by request only. All models are NON-STOCK made-to-order. When ordering, specify quantity, catalog number, voltage, wattage, optional controls, and color. Consult sales representative for lead times.

*Watts per Ft.**

100	125	150
188	250	

*Voltages**

120	208	240	277
480	347	600	

SHA (Multiple Elements) Lengths

Length	28″	3′	4′	5′	6′	7′	8′	9′	10′
Shipping Weight	12 lbs	15.5 lbs	20 lbs	25.5 lbs	30 lbs	35 lbs	40 lbs	45 lbs	50 lbs

NOTE: Cabinet available up to 12 ft. length. Custom length cabinets are priced with heater and blank to the next larger size. Backs are provided standard with no finish. For finished backs, add 10% to list price. Knockouts on back omitted by request only. All models are NON-STOCK made-to-order. When ordering, specify quantity, catalog number, voltage, wattage, optional controls, and color. Consult sales representative for lead times.

*Watts per Ft. — 2 Elements**

375	500

*Voltages — Single Phase**

208	240	277	347	600

*Watts per Ft. — 3 Elements **

600	750

*Voltages — Three Phase**

208	240	600

*Specs vary by length. Reference the submittal sheet or additional detail

Optional Built-In Controls:

SUFFIX*	OPTIONAL BUILT-IN CONTROL	RATINGS & DESCRIPTION
T	Single-Pole Thermostat	Rated 25 amps @ 120-240 VAC and 22 amps @ 277 VAC. Pilot duty rating of 125 VA (all voltages). 60–120°F temperature range; adjustable through outlet grille-tamper-resistant. (See Note B) Not available on three-phase heaters.
2T	Double-Pole Thermostat	Rated 25 amps @ 120-240 VAC and 22 amps @ 277 VAC. Pilot duty rating of 125 VA (all voltages). 60–120°F temperature range; adjustable through outlet grille-tamper-resistant. (See Note B for amperage restrictions.)
DS	Power On/Off Switch	Double-pole, rated 20 amp @ 120-277 VAC. (See Note A) For three-phase heaters and single-phase heaters over 20 amps specify two.
TR	Transformer Relay	Single-pole, low voltage relay with built-in transformer (24 VAC control), rated 22 amps @ 120–240 VAC and 22 amps @ 277 VAC. (See note E) 17 amps @ 347V. Not available on three-phase heaters.
PR	Power Relay	Single-pole thermal time delay relay, rated 25 amps @ 120–600 VAC. (See Notes E & F). Specify control voltage.
2ST	2-Stage Thermostat	Rated 24 amps @ 120–240 VAC and 22 amps @ 277 VAC. Pilot duty rating of 125 VA (all voltages). 60–120°F temperature range, adjustable through outlet grille-tamper-resistant. Available on 2- or 3-element, single-phase heaters only.
PDT	Single-Pole Thermostat	Same as -T except Pilot Duty. (See Note C)
2TPD	Double-Pole Thermostat	Same as -2T except Pilot Duty. (See Note C & D)
M	Outlet Mesh	Price per foot

NOTE: * Addition To Basic Catalog No. (See Note D)
A. For single-phase loads over 20A and all three-phase loads, specify (2) power on/off switches. **B**. This control option is not available on single-phase heaters over 25 amps (22 amps on 277 VAC). In combination with the power on/off switch option use the 2ST thermostat option on heaters over 20 amps. **C**. A second transformer relay can be sequenced off the first transformer relay in the same heater. Up to 30 power relays in different heaters can be controlled by (1) single-stage pilot duty thermostat. **D**. Up to 30 power relays in different heater can be controlled by each stage of a two-stage pilot duty thermostat. **E**. Two relays are required on single-phase heaters over 20 amps with a power on/off switch, over 25 amps without a power on/off and on all three-phase heaters. Two relays are available for two-stage on two- or three-element heaters only. **F**. Three power relays are available for three-stage on three-element heaters only.

Reference Marley Catalog and Submittals for additional control option details.

DBA & SHA SERIES
Architectural Sill-Height Convector

Blank Sections & Accessories — DBA Series:

CATALOG NO.	DIMENSIONS (W x H x L)	INLET	SHIP WT.
DBABS1F	3 ⅝" x 6" x 1'	Front	4 lbs
DBABS1B		Bottom	
DBABS2F	3 ⅝" x 6" x 28"	Front	7 lbs
DBABS2B		Bottom	
DBABS3F	3 ⅝" x 6" x 3'	Front	9 lbs
DBABS3B		Bottom	
DBABS4F	3 ⅝" x 6" x 4'	Front	12 lbs
DBABS4B		Bottom	
DBABS5F	3 ⅝" x 6" x 5'	Front	16 lbs
DBABS5B		Bottom	
DBABS6F	3 ⅝" x 6" x 6'	Front	19 lbs
DBABS6B		Bottom	
DBABS7F	3 ⅝" x 6" x 7'	Front	22 lbs
DBABS7B		Bottom	
DBABS8F	3 ⅝" x 6" x 8'	Front	24 lbs
DBABS8B		Bottom	
DBABS9F	3 ⅝" x 6" x 9'	Front	27 lbs
DBABS9B		Bottom	
DBABS10F	3 ⅝" x 6" x 10'	Front	30 lbs
DBABS10B		Bottom	

NOTE: Blank section grilles are not punched unless requested.

CATALOG NO.	DESCRIPTION	ADDITIONAL SPACE REQUIRED	SHIP WT.
DBAECLS**	End Cap w/Screws — Left		
DBAECRS**	End Cap w/Screws — Right		
DBAICF**	Inside Corner-Front In	8 ½"	5 lbs
DBAICB**	Inside Corner-Bottom In	8 ½"	5 lbs
DBAOCF**	Outside Corner-Front In	5"	4 lbs
DBAOCB**	Outside Corner-Bottom In	5"	4 lbs
DBA135ICF**	135° Inside Corner-Front In	8 ½"	5 lbs
DBA135ICB**	135° Inside Corner-Bottom In	8 ½"	5 lbs
DBA135OCF**	135° Outside Corner-Front In	5"	4 lbs
DBA135OCB**	135° Outside Corner-Bottom In	5"	4 lbs
DBADESBL**	Dec. End Section-Bottom In, Left	9 ⁹⁄₆₄"	5 lbs
DBADESBR**	Dec. End Section-Bottom In, Right		5 lbs
DBADESFL**	Dec. End Section-Front In, Left		4 lbs
DBADESFR**	Dec. End Section-Front In, Right		4 lbs
DBASP**	Splice Plate	0–¼"	1 lbs
DBAFL3**	Filler Section 3 in.	0–3"	1 lbs
DBAFL6**	Filler Section 6 in.	3–6"	1 lbs
DBAFL9**	Filler Section 9 in.	6–9"	1 lbs
DBAFL12**	Filler Section 12 in.	9–12"	1 lbs
DBA-FL18**	Filler Section 18 in.	15–18"	1.5 lbs
DBADRF**	Receptacle Section-Front In	4 ½"	1.5 lbs
DBADRB**	Receptacle Section-Bottom In		
PK3S*	Standard Pedestal 2 ⅞ in. (H)	—	2 lbs
PK3A*	Architectural Pedestal 2 ⅞ in. (H)	—	2 lbs
SO1A***	Stand-Off Bracket	—	1 lbs

*One pedestal. Two required on units up to 10 ft., three required on units over 10ft.

**Add suffix -P for painted followed by the color code (i.e. W for White, B for Black, etc.), -C for clear anodized (excludes PK3S—Black only).

***All Stand-off Brackets come standard as Beige.

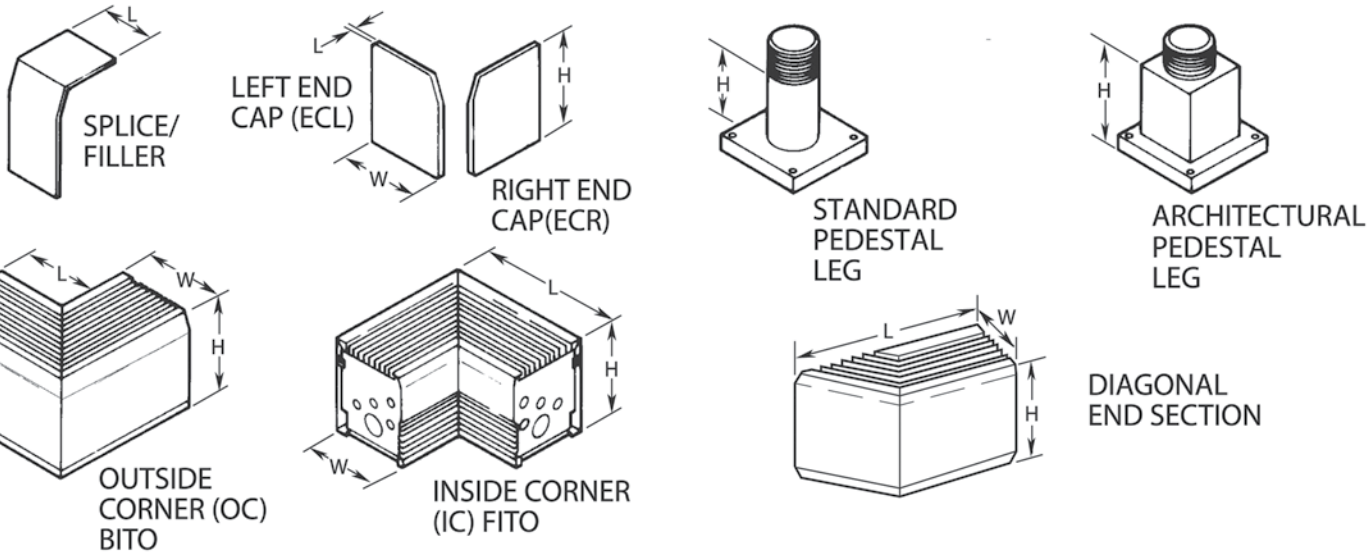

DBA & SHA SERIES
Architectural Sill-Height Convector

Scan the QR code to access additional specs and features

Blank Sections & Accessories — SHA Series:

CATALOG NO.	DIMENSIONS (W x H x L)	INLET	SHIP WT.
SHABS1F	5 ⅜″ x 7″ x 1′	Front	7 lbs
SHABS1B		Bottom	
SHABS2F	5 ⅜″ x 7″ x 28″	Front	11 lbs
SHABS2B		Bottom	
SHABS3F	5 ⅜″ x 7″ x 3′	Front	14 lbs
SHABS3B		Bottom	
SHABS4F	5 ⅜″ x 7″ x 4′	Front	18 lbs
SHABS4B		Bottom	
SHABS5F	5 ⅜″ x 7″ x 5′	Front	22 lbs
SHABS5B		Bottom	
SHABS6F	5 ⅜″ x 7″ x 6′	Front	27 lbs
SHABS6B		Bottom	
SHABS7F	5 ⅜″ x 7″ x 7′	Front	32 lbs
SHABS7B		Bottom	
SHABS8F	5 ⅜″ x 7″ x 8′	Front	37 lbs
SHABS8B		Bottom	
SHABS9F	5 ⅜″ x 7″ x 9′	Front	40 lbs
SHABS9B		Bottom	
SHABS10F	5 ⅜″ x 7″ x 10′	Front	44 lbs
SHABS10B		Bottom	

NOTE: Blank section grilles are not punched unless requested.

CATALOG NO.	DESCRIPTION	ADDITIONAL SPACE REQUIRED	SHIP WT.
SHAECLS**	End Cap w/Screws — Left		
SHAECRS**	End Cap w/Screws — Right		
SHAICF**	Inside Corner-Front In	10″	11 lbs
SHAICB**	Inside Corner-Bottom In	10″	11 lbs
SHAOCF**	Outside Corner-Front In	5″	7 lbs
SHAOCB**	Outside Corner-Bottom In	5″	7 lbs
SHA135ICF**	135° Inside Corner-Front In	10″	11 lbs
SHA135ICB**	135° Inside Corner-Bottom In	10″	11 lbs
SHA135OCF**	135° Outside Corner-Front In	5″	7 lbs
SHA135OCB**	135° Outside Corner-Bottom In	5″	7 lbs
SHADESBL**	Dec. End Section-Bot. In, Left	12 ½′	11 lbs
SHADESBR**	Dec. End Section-Bot. In, Right		11 lbs
SHADESFL**	Dec. End Section-Front In, Left		7 lbs
SHADESFR**	Dec. End Section-Front In, Right		7 lbs
SHASP**	Splice Plate	0–¼″	1 lbs
SHAFL3**	Filler Section 3 in.	0–3″	1 lbs
SHAFL6**	Filler Section 6 in.	3–6″	1 lbs
SHAFL9**	Filler Section 9 in.	6–9″	2 lbs
SHAFL12**	Filler Section 12 in.	9–12″	3 lbs
SHA-FL18**	Filler Section 18 in.	15–18″	5 lbs
SHADRF**	Receptacle Section-Front In	4 ½″	2 lbs
SHADRB**	Receptacle Section-Bottom In		
PK5S*	Standard Pedestal 4 ⅛ in. (H)	—	2 lbs
PK5A*	Architectural Pedestal 4 ⅛ in. (H)		
SO1A***	Stand-Off Bracket	—	1 lbs

*One pedestal. Two required on units up to 10 ft., three required on units over 10ft.
**Add suffix -P for painted followed by the color code (i.e. W for White, B for Black, etc.), -C for clear anodized, -B for bronze anodized (excludes PK5S—Black only).
***All Stand-off Brackets come standard as Beige.

