QMARK®
A Marley Engineered Products Brand

DBA & SHA Series
Convector Accessories

REFER TO HEATER INSTALLATION INSTRUCTIONS
FOR IMPORTANT SAFETY INFORMATION AND HEATER MOUNTING OPTIONS.

⚠ CAUTION ⚠

TO REDUCE POTENTIAL FOR FIRE OR ELECTRIC SHOCK, READ AND FOLLOW INSTRUCTIONS AND WARNINGS PROVIDED IN THE HEATER INSTRUCTION MANUAL.

Read Carefully – These instructions are written to help prevent difficulties that might arise during installation of DBA & SHA series Convector Accessories. Studying the instructions first may save you considerable time and money later. QMark DBA & SHA Series Convector Accessories are designed for easy and economical installation. When properly assembled, they make a beautiful heating installation. Observe the following procedures, and cut your mounting time to a minimum.

INSTALLATION OF END CAPS
(Cat. No. DBAECL, DBAECR, SHAECL and SHAECR)

1. Push end cap into end of heater until it is flush (Figure 1).
2. Install screw (supplied) through hole in top grille to secure end cap in place.

NOTE: If the grille does not have a hole in top, drill a 1/4" hole in the 3rd slot from front of cover on DBA and in the 4th slot on SHA, 1/2" from the end.

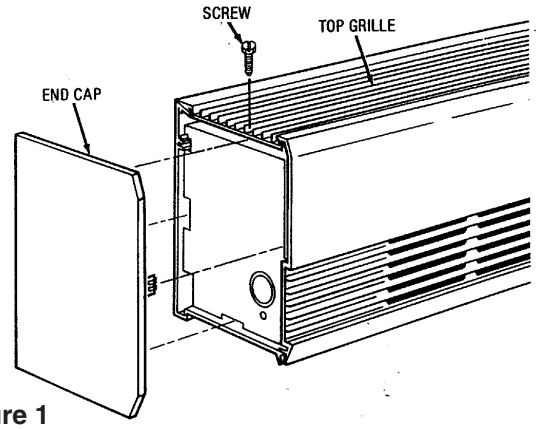

Figure 1

INSTALLATION OF END CAPS
(Cat. No. DBAECLS, DBAECRS, SHAECLS and SHAECR)

1. Position the end cap on the end of heater. Install two (3) No. 6 flat head screws (supplied) to secure the end cap to the front cover. (See Figure 1A.)

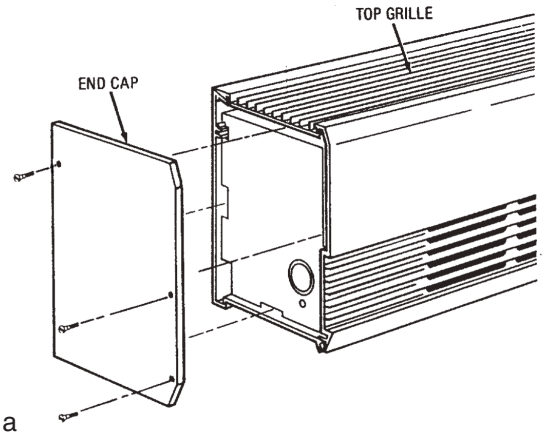

Figure 1a

INSTALLATION OF FILLER SECTIONS
(Cat. No. DBAFL3 thru DBAFL18)
(Cat. No. SHAFL3 thru SHAFL18)
(Cat. No. DBASP & SHASP)

1. Mount the heaters on the wall in accordance with the heater installation instructions. Make sure the heaters are at the same mounting height from the floor to assure a level mounting of the filler section.
2. Position the filler section on top of the heater(s) and press anchoring ribs down between the outlet louvers (Figure 2). If necessary, protect the top of the filler section with a block of wood and tap the filler section gently into place.

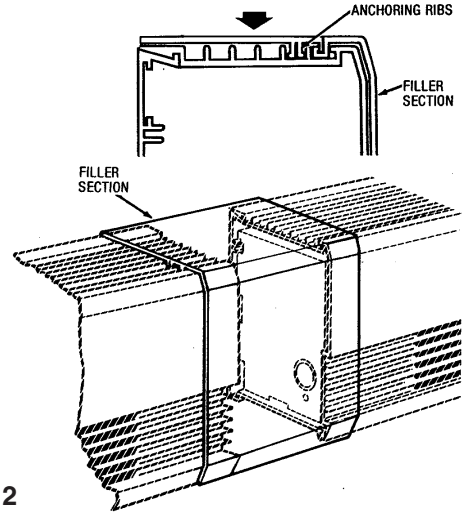

Figure 2

SAVE THESE INSTRUCTIONS

3. If the filler section is to be mounted between a heater and a wall, a block of wood to support one end of the filler should be attached to the wall level with the top the heater. See Figure 3.

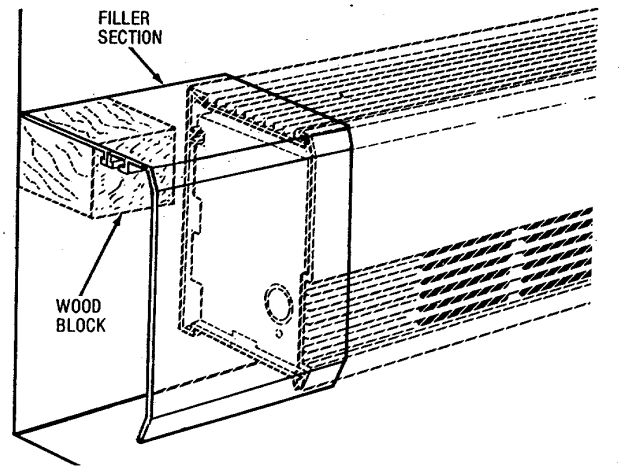

Figure 3

4. To remove splice plate lift front leg away from heater cover and rotate until splice legs disengage from louvers.

IF IT IS NECESSARY TO RUN WIRING FROM ONE UNIT TO ANOTHER THROUGH THE FILLER SECTION, INSTALL THE FILLER SECTION WIREWAY THAT IS PACKED WITH THE FILLER SECTION. PROCEED AS FOLLOWS:

1. Both ends of the wireway have two tabs (Figure 4). These tabs are to be inserted in the rectangular opening at the bottom rear of the junction box. If the wireway is too long as supplied, shorten it and cut new tabs in the shortened end.
2. After the tabs of the wireway are inserted into the junction box, bend the tabs back until they are flush with the sidewall of the junction box. Repeat on the other end of the wireway.

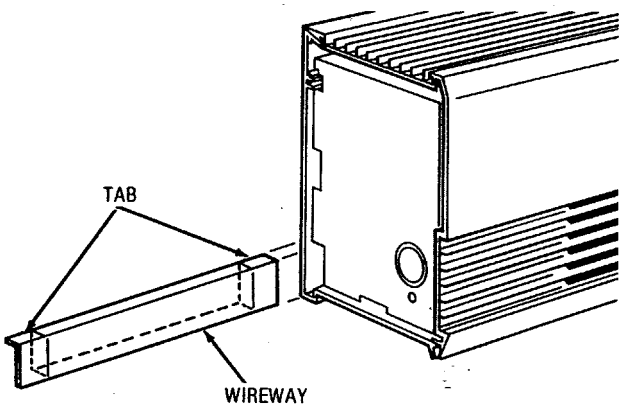

Figure 4

INSTALLATION OF CORNER SECTIONS AND DECORATIVE END SECTIONS

NOTE: Mount the corner section(s) to the wall before the heater is mounted.

1. Remove the heater front cover in accordance with the heater Installation Instructions
2. Locate the section on the wall. Make certain that the section will be level with the heater.
3. Drill mounting holes (recommended dia. 1/4") through the back housing of the section. We recommend locating these holes inside the junction boxes (Figure 5).
4. Attach the section to the wall using appropriate fasteners (supplied by installer).
5. Replace the heater cover in accordance with the heater Installation Instructions.
6. Install section front cover.

NOTE: Corner section shown.

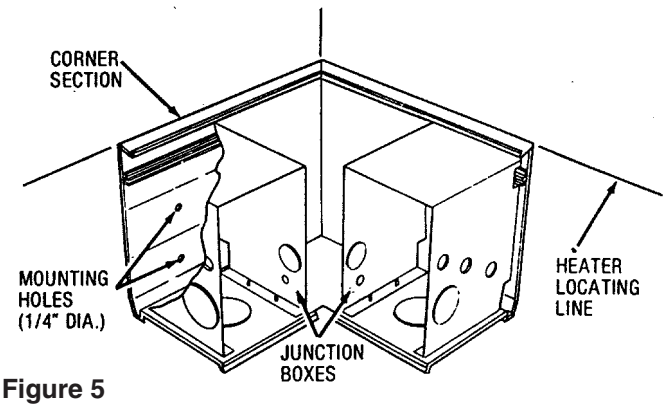

Figure 5

INSTALLATION OF PEDESTALS (CAT NO. PK3S, PK3A, PK5S AND PK5A)

Refer to Figure 6a or 6b for minimum mounting height.

NOTE: Up to 3/4" thick floor covering, such as carpet, tiles linoleum, etc., may be installed around and under the heater without adversely affecting the performance of the heaters.

Heater Capacity (Watts/Food)	Heater Dimension "A" (Minimum Mounting Height Above Floor)	Pedestal Dimension "B" (Minimum Height Above Floor)
100, 125, 150, 188 and 250	1-3/4"	2"
375, 500, 600 and 750	3"	3-1/4"

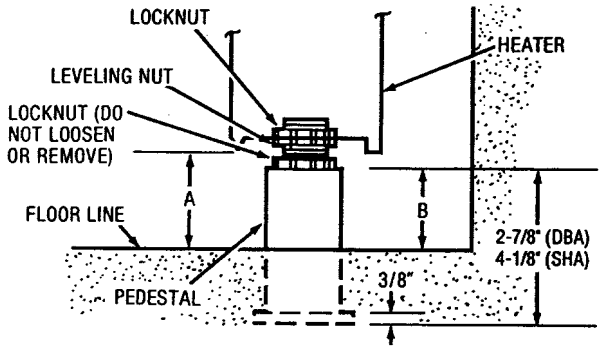

Figure 6a Pedestal Imbedded in floor.

	Height Above Floor (Dim. "A")	
Heater Catalog Number	Min.	Max
DBA	2-5/8"	3-1/2"
SHA	3-7/8"	4-3/4"

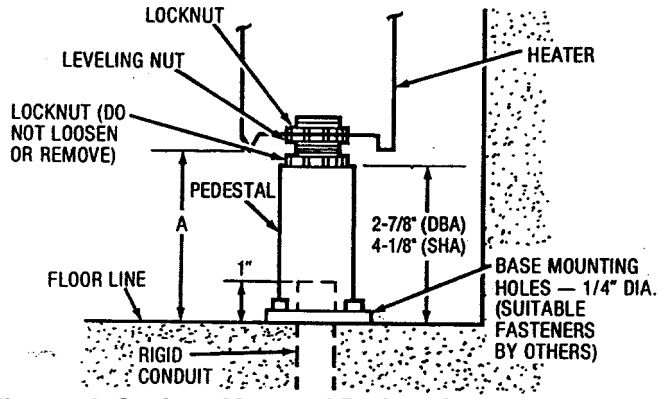

Figure 6b Surface-Mounted Pedestal

1. Remove the heater front cover in accordance with the heater Installation Instructions
2. Remove the 1-23/32" knockout from the bottom of the heater at each end and at other location where pedestals are to be installed. (Figure 7.)
3. Remove the top locknut from the pedestal.

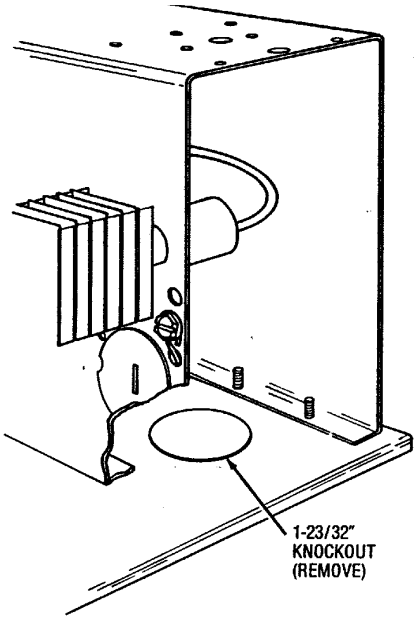

Figure 7

4. To locate the mounting holes in the floor, mount the pedestals through the 1-23/32" holes in bottom of the heater and secure with top locknuts (Figure 8).
5. Position the heater in the desired location and mark pedestal mounting hole locations on the floor.
6. Drill holes in floor and install threaded inserts (or equivalent) for 1/4" mounting bolts (inserts & bolts supplied by installer).
7. Remove the pedestals from the heater and secure the pedestals to the floor in the proper locations.
8. Positions the heater on the pedestals and level by adjusting the locknuts. Secure the locknuts when leveling is finished.
9. Replace the heater front cover in accordance with the heater Installation Instructions.

PEDESTAL INSTALLATION (Imbedded in New Concrete Floor)

When a heater installation is to be imbedded in a new concrete floor, the pedestals are first installed in the concrete, then the heater installed after the concrete has set. It is imperative that

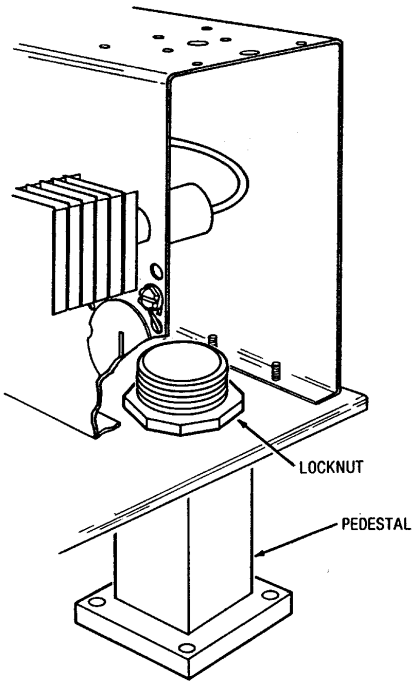

Figure 8

the pedestals be installed in perfect alignment so that the holes in the bottom of the heater housing will mate with the pedestasl. In order to achieve the required alignment, it is recommended that the pedestals be held in place by the use of jigs during the concrete pour. The jigs should be constructed of good quality 1" x 4" lumber as shown in Figure 9. The pedestals are installed in the jigs and then positioned for the concrete pour. One end pedestal must be screwed onto rigid wall conduit so that the mounting height requirements in figure 6a are met after pouring in the finished floor. (The method of securing the pedestals and jigs in place during the pouring of the concrete is at the option of the installer.) After the concrete has set, remove the jigs from the pedestals and install the heater.

TYPICAL SET-UP OF HEATER PEDESTAL USING JIGS TO MAINTAIN PROPER POSITIONING DURING CONCRETE POURING.

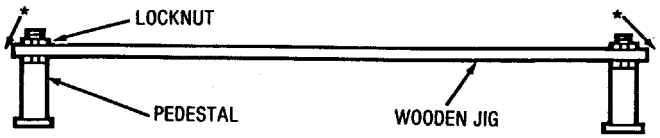

*When butting heaters, leave a 1/8" gap between heaters to allow for expansion.

NOTE: Holes in jigs should be 1-11/16".

For any length heater up to 10' in length, pedestal placement is shown below.

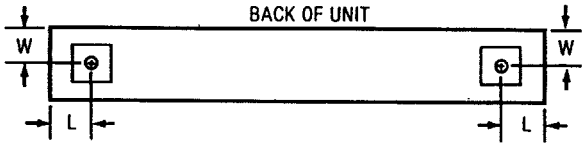

Model No.	Width	Length
DBA	2"	2-1/4"
SHA	2-25/32"	2-1/4"

Figure 9

It is suggested that actual dimensions of the heater be used when constructing the jigs to insure correct fit of the heater to the pedestals.

LIMITED WARRANTY

All products covered by this instruction sheet are warranted against defects in workmanship and materials for one year from date of installation. This warranty does not apply to damage from accident, misuse, or alteration; nor where the connected voltage is more than 5% above the nameplate voltage; nor to equipment improperly installed or wired or maintained in violation of this instruction sheet. All claims for warranty work must be accompanied by proof of the date of installation.

The customer shall be responsible for all costs incurred in the removal or reinstallation of products, including labor costs, and shipping costs incurred to return products to a Marley Engineered Products Service Center, and we will repair or replace, at our option, at no charge to you with return freight paid by Marley. It is agreed that such repair or replacement is the exclusive remedy available from .

THE ABOVE WARRANTIES ARE IN LIEU OF ALL OTHER WARRANTIES EXPRESSED OR IMPLIED, AND ALL IMPLIED WARRANTIES OF MERCHANTABILITY AND FITNESS FOR A PARTICULAR PURPOSE WHICH EXCEED THE AFORESAID EXPRESSED WARRANTIES ARE HEREBY DISCLAIMED AND EXCLUDED FROM THIS AGREEMENT. MARLEY ENGINEERED PRODUCTS SHALL NOT BE LIABLE FOR CONSEQUENTIAL DAMAGES ARISING WITH RESPECT TO THE PRODUCT, WHETHER BASED UPON NEGLIGENCE, TORT, STRICT LIABILITY, OR CONTRACT.

Some states do not allow the exclusion on limitation of incidental or consequential damages, so the above exclusion or limitation may not apply to you. This warranty gives you specific legal rights, and you may also have other rights which vary from state.

For the address of your nearest authorized service center, contact Marley Engineered Products, 470 Beauty Spot Road East, Bennettsville, SC 29512 USA. Merchandise returned to the factory must be accompanied by a return authorization and service identification tag, both available from the above location. When requesting return authorization, include all catalog numbers shown on the products.

HOW TO OBTAIN WARRANTY SERVICE AND WARRANTY PARTS PLUS GENERAL INFORMATION

1. Warranty Service or Parts **1-800-642-4328**
2. Purchase Replacement Parts **1-800-654-3545**
3. General Product Information **www.marleymep.com**

Note: When obtaining service always have the following:
1. Model number of the product
2. Date of manufacture
3. Part number or description

Marley Engineered Products

470 Beauty Spot Rd. East
Bennettsville, SC 29512 USA

5200-2055-003

ECR 38903
09/10