QMARK®
A Marley Engineered Products Brand

QWD Washdown Unit Heater

2 WEEK LEAD-TIME



- **2 WEEK LEAD TIME**
  – Built to your specifications in 2 weeks
- **ASSEMBLED IN THE USA**
  – From domestic and foreign components
- **TOTALLY ENCLOSED MOTOR**
  – Ball bearing motor epoxy coated for moisture and corrosion resistance
- **NEMA 4X BOX**
  – Protection against water and dust penetration
- **16 GAUGE 304 STAINLESS STEEL CABINET**
  – More resistant to corrosion for longer life
- **STAINLESS STEEL FINNED ELEMENT**
  – Improved heat distribution and corrosion protection
- **14 GAUGE STAINLESS STEEL WALL/CEILING BRACKET**
  – Provides multiple options for mounting heater and corrosion resistant
- **24 VOLT CONTROLS**
  – Improves the safety with the use of a remote thermostat
- **AUTOMATIC TEMPERATURE HIGH LIMIT**
  – Automatically resets thermal limit if temperature gets too high

- **APPLICATIONS INCLUDE:**
  – Water Treatment Plants
  – Coal Handling Areas
  – Food Processing Plants
  – Foundries
  – Car Washes
  – Swimming Pools
  ... And Much More

INTERTEK ETL CM LISTED C US

How to order

QWD 10 8 3 1 TLS

Catalog Prefix (QWD)

KW
02 - 2.0 kw, 03 - 3.0 kw
05 - 5.0 kw, 07 - 7.5 kw
10 - 10.0 kw, 12 - 12.5 kw
15 - 15.0 kw, 20 - 20.0 kw
25 - 25.0 kw, 30 - 30.0 kw,
39 - 39.0 kw

Voltage
1=120V, 8=208V, 2=240V,
7=277V, 4=480V, 6=600V

Options
T - Thermostat
L - Pilot Light
S - Mode/Selector Switch
D - Disconnect Switch
E - Monel Element*
M - Manual Reset
P - Epoxy Coating

Control Voltage: 1=120V, 2-24V(standard)

Phase: 1=1Ø, 3=3Ø

* Monel elements are subject to longer lead times - contact factory for details.

SELECTION CHART

HEATER KW	OUTPUT BTU/HR.	TEMP RISE	CFM	TOTAL LINE AMPERAGE (Includes motor amps) 120V 1ph	208V 1ph	208V 3ph	240V 1ph	240V 3ph	277V 1ph	480V 1ph	480V 3ph	600V 3ph	SHIP WT. (lbs.)
2.0	6,824	9	700	18.2	10.5	–	9.1	–	–	–	–	–	60
3.0	10,236	14	700	26.6	15.3	9.2	13.3	8.0	11.5	–	4.0	–	60
5.0	17,060	23	700	–	24.9	14.8	21.6	12.8	18.7	10.8	6.4	9.0	60
7.5	25,590	34	700	–	37.0	21.7	32.0	18.8	27.7	16.0	9.4	9.0	60
10.0	34,120	22	1450	–	–	28.7	42.4	24.8	36.8	21.2	12.4	11.4	60
12.5	42,650	27	1450	–	61.9	36.5	53.6	31.6	–	–	15.8	13.8	110
15.0	51,180	20	2400	–	73.9	43.4	64.1	37.6	–	32.0	18.8	16.3	110
20.0	68,240	26	2400	–	–	–	–	49.7	–	42.4	24.8	21.1	120
25.0	85,300	33	2400	–	–	71.2	–	61.7	–	–	30.8	25.9	120
30.0	102,360	39	2400	–	–	85.1	–	73.7	–	–	36.9	30.7	120
39.0	133,068	51	2400	–	–	–	–	–	–	–	47.7	39.4	120

DIMENSIONS & MOUNTING LIMITATIONS

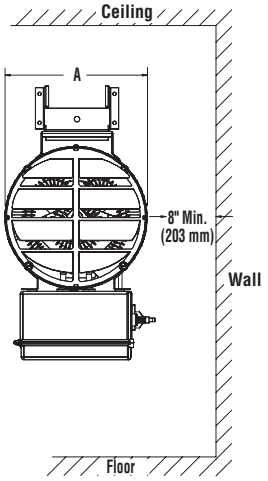

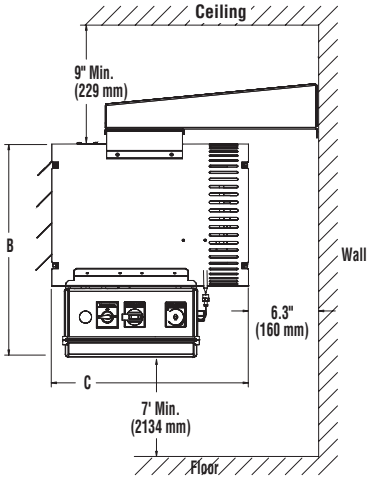

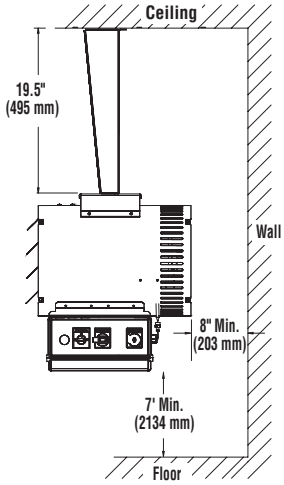

Dimensions Inches (mm)				
KW	A	B	C	D
2-10	13 (330)	19.5 (495)	18 (457)	19.5 (495)
12.5-39.0	20 (508)	31 (787)	27 (686)	24.2 (615)

QMARK® A Marley Engineered Products Brand