Marley
Engineered Products

SERVICE REFERENCE

SALES REFERENCE **5200-2474-000**

161-302421-006

DATE **MAY, 2002**

INSTALLATION, OPERATION
RENEWAL PARTS IDENTIFICATION



X Series (Model B) Explosion Proof Heater

Class I
Group C & D, Div. 1 & 2
Class II
Groups E, F & G
T3B - 165°C (329°F)

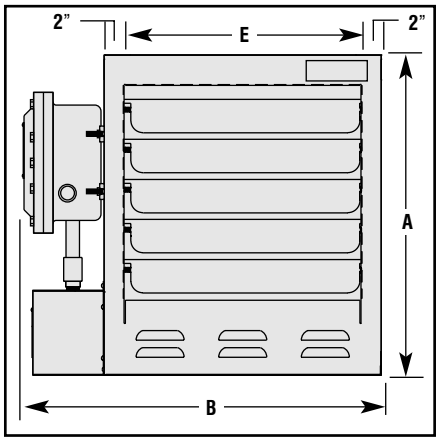

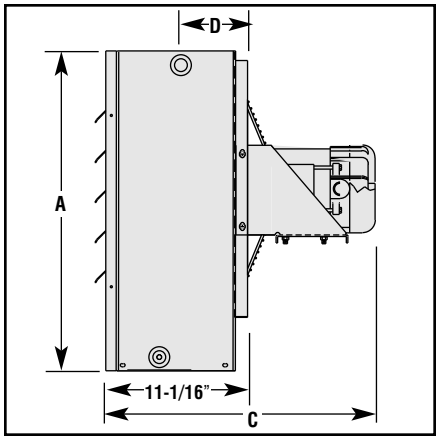

Table A – Specifications

kW	Voltage and Phase	Horiz. Air Discharge (Ft.)	BTUH	CFM	Wt. (Lbs.)	Overall Dimensions (In.)			5/8" UNC Tapped Mounting Hole Locations	
						A	B	C	D	E
3	208/240V-1 or 3Ø 480/575V-3Ø	28	10,236	700	127	19-1/8	23-7/8	21	3-1/2	13-5/8
5	208/240V-1 or 3Ø 480/575V-3Ø	28	17,060	700	127	19-1/8	23-7/8	21	3-1/2	13-5/8
7.5	208/240V-1 or 3Ø 480/575V-3Ø	32	25,590	840	133	19-1/8	23-7/8	21	3-1/2	13-5/8
10	240V-1 or 3Ø 208/480/575V-3Ø	32	34,120	840	138	19-1/8	23-7/8	21	3-1/2	13-5/8
15	208/240/480V 575V-3Ø	47	51,180	1450	150	25	27-7/8	21	4-13/32	17-5/8
18	240V-3Ø	43	61,420	1400	165	25	27-7/8	21	4-13/32	17-5/8
20	480/575V-3Ø	43	68,240	1400	165	25	27-7/8	21	4-13/32	17-5/8
25	480/575V-3Ø	54	85,300	2330	200	32-1/8	31-7/8	21-3/4	5-1/2	21-5/8
30	480/575V-3Ø	54	102,360	2330	200	32-1/8	31-7/8	21-3/4	5-1/2	21-5/8
35	480/575V-3Ø	54	119,420	2330	200	32-1/8	31-7/8	21-3/4	5-1/2	21-5/8

SAVE THESE INSTRUCTIONS

⚠WARNING

Read Carefully - These instructions are written to help you prevent difficulties that might arise during installation of heaters. Studying the instructions first may save you considerable time and money later. Observe the following procedures, and cut your installation time to a minimum.

TO REDUCE RISK OF FIRE AND ELECTRIC SHOCK:

1. ***To reduce the risk of ignition of hazardous atmospheres:*** In accordance with the National Electrical Code, do not install where operating temperature code exceeds the ignition temperature of the hazardous atmosphere. Use only in atmospheres having an ignition temperature higher than 165°C (329°F).
2. Disconnect from supply circuit before opening enclosures.
3. ***Hazard of Electric Shock. Heater must be effectively grounded in accordance with N.E.C. to eliminate shock hazard.***
4. Heat exchanger contains Propylene Glycol under pressure at operating temperature. A material safety data sheet (MSDS) is available from Marley upon request. Should leakage occur, remove unit from service and investigate cause.
5. Keep all electrical enclosure covers tightly closed and secured with all bolts and threads. Cover joints must be clean before replacing covers.
6. Install and operate in upright position only. Refer to Figure 3 for level requirements. Failure to comply will cause overheating of the element and shutting down the unit by tripping the high temperature cutout.
7. All unused threaded openings not used for supply wiring must be fitted with threaded plugs approved for use in hazardous locations.
8. All unit electrical installation fittings, conduit, wiring and seals must meet NEC and local codes for hazardous locations.
9. External line fusing or circuit breaker protection is required.
10. Hi limit cutouts must never be bypassed in the control circuit.
11. Alarm pilot lamp, if supplied, will turn on if the high limit control actuates. Steady on lamp indicates manual reset protector has tripped. This could result if the heat exchanger is obstructed (dirty), inlet air restricted or fan not turning. Shut off power to unit and refer to repair procedures section of instruction sheet.
12. Mounting clearances on nameplate must be observed.
13. Use copper wire for supply connections according to size and rating on nameplate.
14. Do not install any type of gasket material on any of the electrical junction box cover surfaces.
15. Do not attempt to override louver stops or operate unit with louvers fully closed.

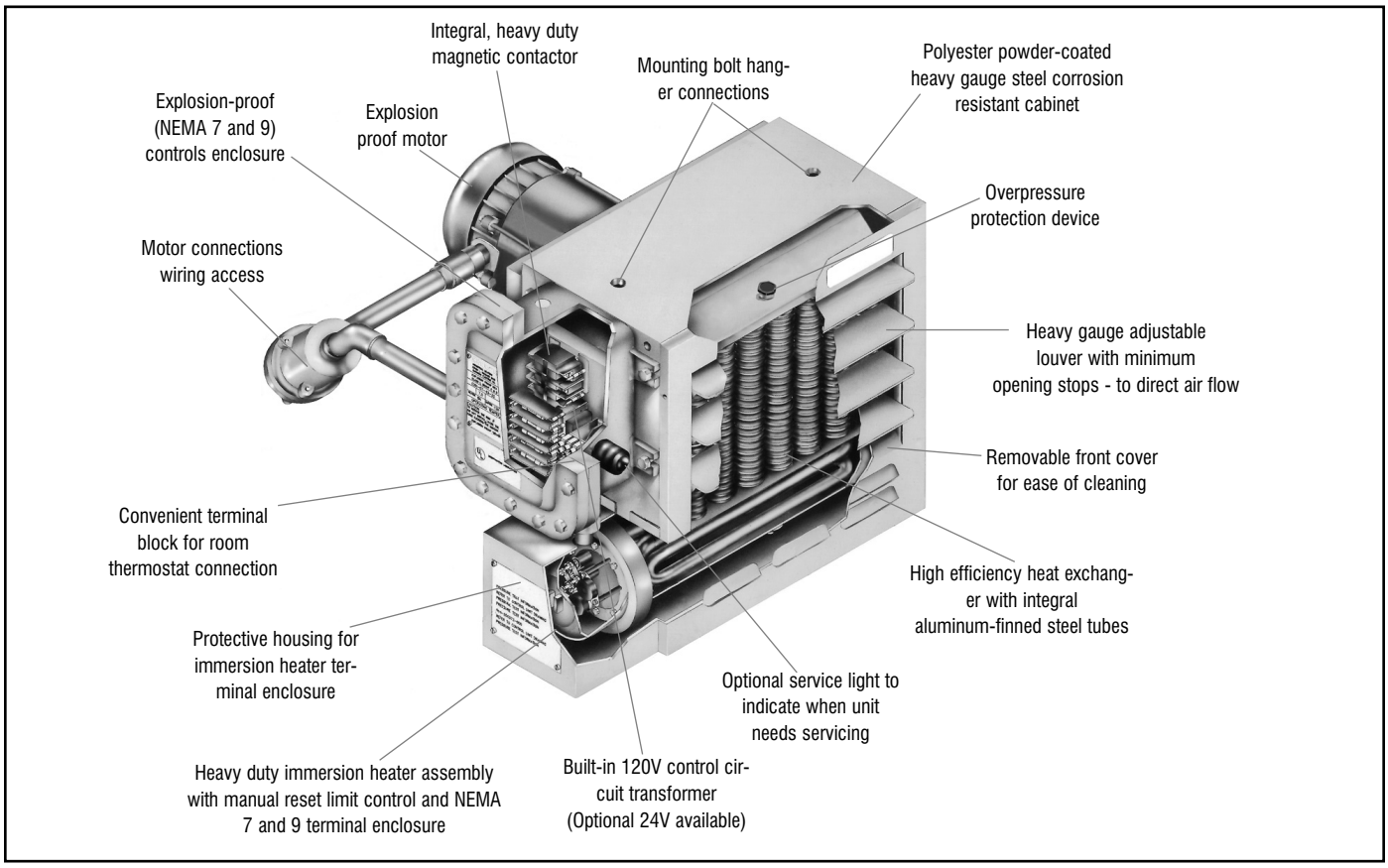

GENERAL

The X-Series units rated 3 through 35 kW are designed for operation in Class I, Div. 1, Group C & D and Class II, Div. 1, Groups E, F and G hazardous atmospheres having an ignition temperature of 165°C (329°F) or higher. They are designed for comfort heating and should not be operated in ambient temperatures exceeding 40° (104°F). All units in Table A are UL listed. The units are easily adapted for wall, ceiling or pole mounting. Refer to Figure 4 on Page 3 for mounting information. They are supplied with either 24 or 120V internal control circuit voltage. The heater is designed for use with an external hazardous location thermostat or optional built-in thermostat.

The standard heater is designed to operate up to 7500 feet (2286 m) altitude. Consult factory for specific recommendations when using the units at higher altitudes.

INSTALLATION

⚠WARNING

Fire/Explosion Hazard. Mount only in upright position and observe nameplate mounting clearances.

Heater Location instructions:
Arrange units so their discharge air streams:

A. are subjected to a minimum of interference from columns, machinery and partitions.
B. wipe exposed walls without blowing directly at them.
C. are directed away from room occupants in comfort heating.
D. are directed along the windward side when installed in a building exposed to a prevailing wind.

Locate thermostat on interior partition walls or posts away from cold drafts, internal heat sources and away from heater discharge air streams.

Small rooms can be heated by one unit heater. Where two walls are exposed, the heater should be mounted as shown in Figure 2. Large rooms require multi-unit installations. Number and capacity of units will be determined by volume of building and square feet of floor area to be heated. Arrange units to provide perimeter air circulation where each unit supports the air stream from another.

The X-Series hazardous location heaters are designed for use only in a permanently mounted upright position. We recommend the use of a mounting kit (ceiling, wall or pole) available from Marley. (Figures 5, 6 and 7)

The ceiling or wall mounting surface and the anchoring provision must be sufficient to support the combined weights of the unit and mounting hardware.

If using mounting hardware or a supporting structure not supplied by Marley, the unit should be suspended from the supporting structure thru the two mounting points on top of the unit with 5/8 NC bolts and lockwashers. If single point mounting is desired, order the correct size Marley adapter bracket (P/N 027-302361-001 for 12" fan units, P/N 027-302361-002 for 16" fan units) and P/N 027-302361-003 for 20" fan units. This bracket is designed to hold the unit over its center of gravity with a 1 dia. bolt. The maximum tilt angles as shown in Figure 3 must not be exceeded in either direction during operation and installation. Failure to comply will cause high limit shut down.

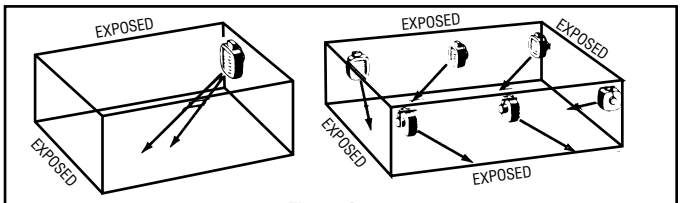

Figure 2

Maximum Out of Plane Allowance

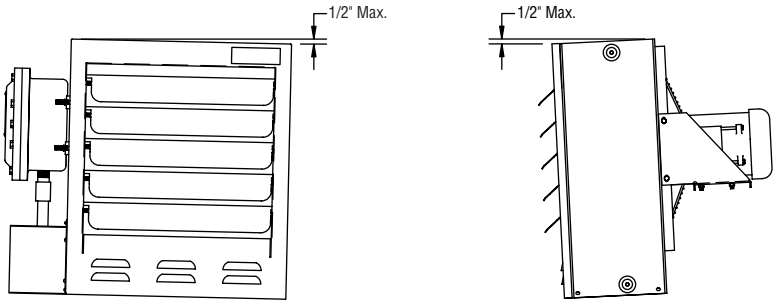

Figure 3

The heaters may be mounted at any convenient height above floor. The minimum spacings shown in Figure 4 should be maintained to adjacent walls and ceiling. If floor heat is desired, do not mount higher than 8 to 10 feet above floor.

Controlling thermostats to individual heaters should be mounted at shoulder height on inside walls or columns and clear of the discharge air stream of the unit. Allow at least 4 in front of heater for air stream to discharge freely.

Do not mount mercury type thermostat directly on unit, vibration could cause malfunction.

Heater may be mounted on a shelf or stand from the bottom. Be sure that mounting clearances are maintained and that bottom of unit has at least 1 clearance underneath it. This is necessary for good air circulation and servicing of heat exchanger. All mounting methods must allow for removal of front cover.

The mounting and anchoring provisions must take into account the unit vibration and cantilevered loading when wall or pole mounted. One of the Marley mounting kits shown in Figures 5, 6 and 7 must be used whenever possible.

Installation Clearances

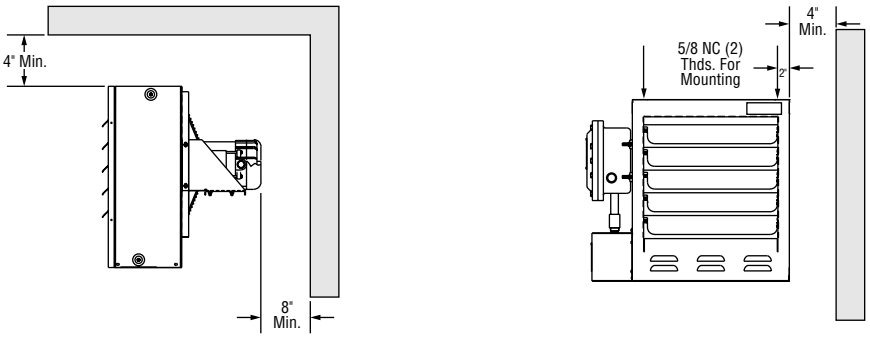

Figure 4

MOUNTING KITS

Wall Mount Kit
Model # XMB-12 12" Fan (3-10 kW)
Model # XMB-16 16" Fan (15-20 kW)
Model # XMB-20 20" Fan (25-35 kW)

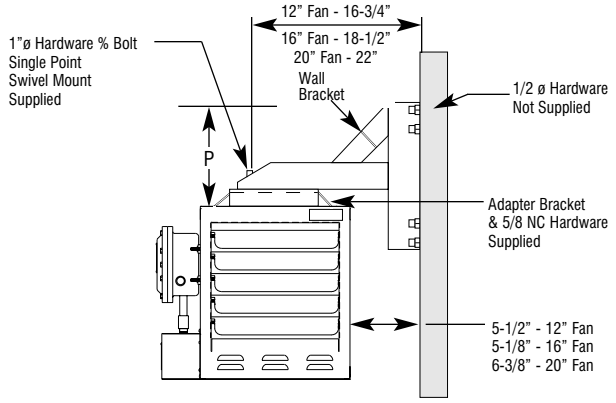

3 through 10 kW	P=10"
15 through 20 kW	P=11-1/2"
25 through 35 kW	P=14-1/2"

Figure 5

Ceiling Mount Kit
Model # XCMOB

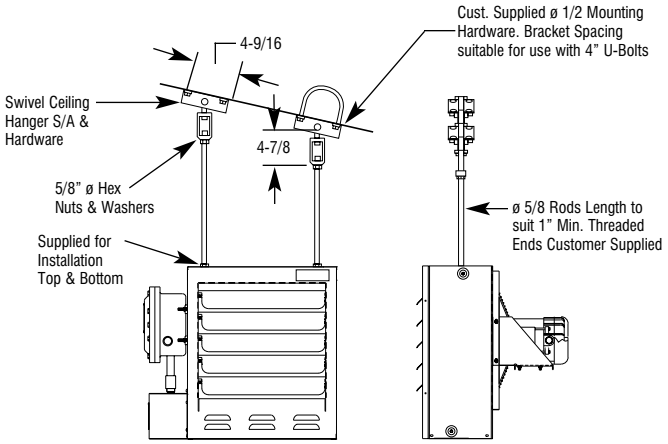

Figure 7

Pole or Wall Mount Kit
Model # XPM-12 12" Fan (3-10 kW)
Model # XPM-16 16" Fan (15-20 kW)
Model # XPM-20 20" Fan (25-35 kW)

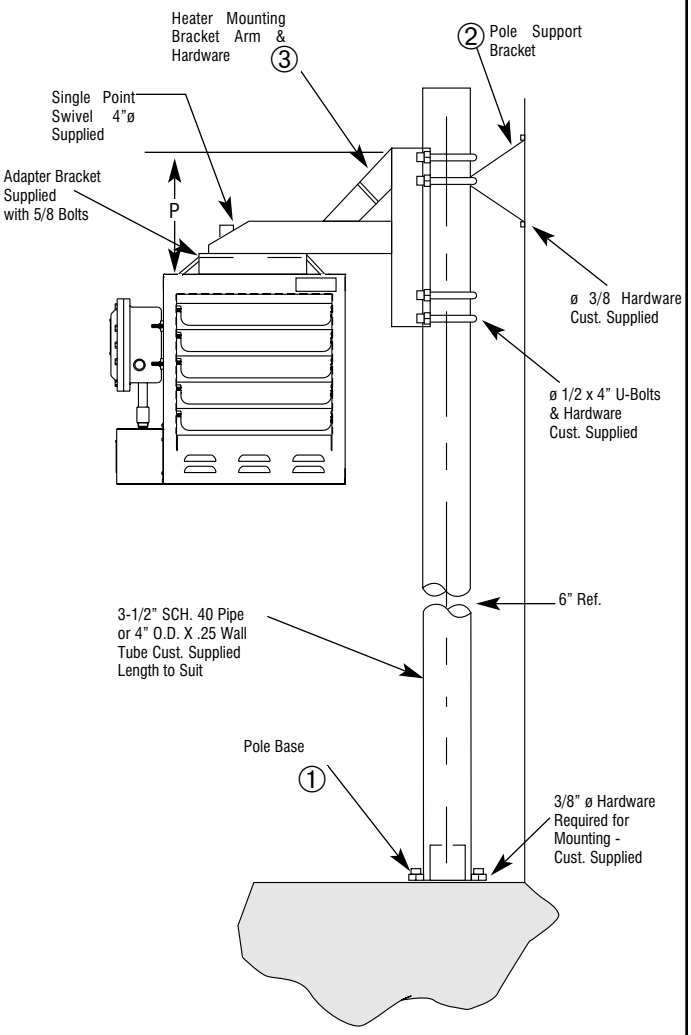

3 through 10 kW	P=10"
15 through 20 kW	P=11-1/2"
25 through 35 kW	P=14-1/2"

Figure 6

Electrical Components

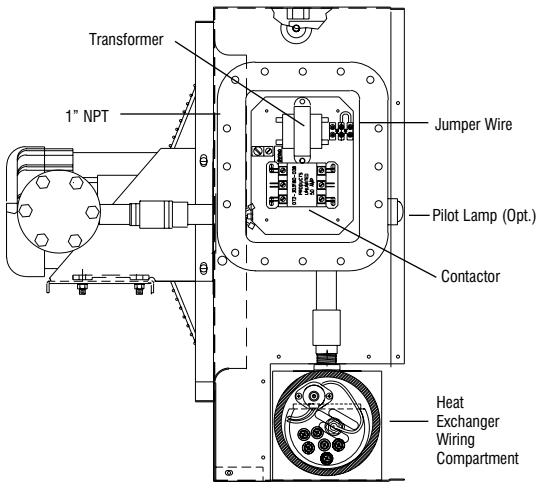

Figure 9

Unit Top View

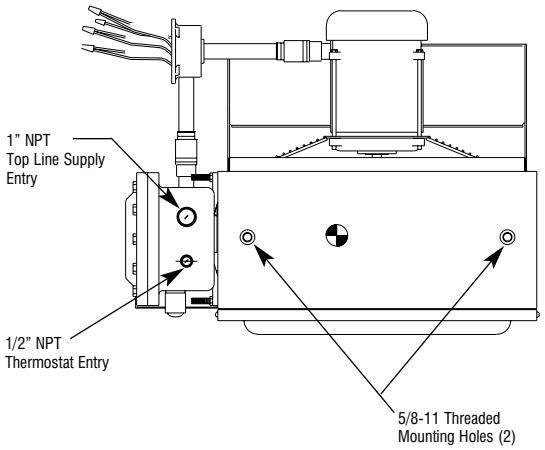

Figure 10

WIRING AND WIRING DIAGRAMS

⚠WARNING

ELECTRIC SHOCK HAZARD. Disconnect all power before installing or servicing heater. Failure to do so could result in personal injury or property damage. Heater must be installed by a qualified person in accordance with the National Electrical Code, NFPA 70.

⚠WARNING

ELECTRIC SHOCK HAZARD. Any installation involving electric heaters must be performed by a qualified person and must be effectively grounded in accordance with the National Electrical Code to eliminate shock hazard.

1. Loosen and remove bolts securing the main terminal enclosure cover on side of unit. Connect heater to line supply wires at the box lugs located on the contactor according the voltage and frequency specified on the nameplate (see Figure 9). Refer to the appropriate wiring diagram which also appears on the inside cover of this enclosure (see Table B and diagrams on page 6).

⚠WARNING

Explosion Hazard. Cover joints must be clean before replacing cover. Do not use any gasket material on joint surfaces.

2. Use copper conductors only for supply wires. Refer to nameplate and Table B for size and rating required.
3. Connect supply line ground conductor to the box lug provided on the base plate below contactor input lugs.

Table B – Supply Wiring Requirements

kW	Phase	Volts	Supply Wire 90°C Size (ga)	Max Fuse Amps	Wiring Diagram #
3	1	208	10	25	I
	3	208	12	15	II
	1	240	10	20	I
	3	240	12	15	II
	3	480	12	15	II
	3	575	12	15	II
5	1	208	8	35	I
	3	208	10	20	II
	1	240	8	30	I
	3	240	10	20	II
	3	480	12	15	II
	3	575	12	15	II
7.5	1	208	6	50	I
	3	208	8	30	II
	1	240	6	45	I
	3	240	8	25	II
	3	480	12	15	II
	3	575	12	15	II
10	3	208	8	40	II
	1	240	4	60	I
	3	240	8	35	II
	3	480	10	20	II
	3	575	12	15	II
15	3	208	4	60	II
	3	240	6	50	II
	3	480	8	25	II
	3	575	10	20	II
18	3	240	4	60	II
20	3	480	8	35	II
	3	575	8	30	II
25	3	480	8	40	II
	3	575	8	35	II
30	3	480	6	50	II
	3	575	8	40	II
35	3	480	4	60	II
	3	575	6	50	II

4. The fan motor is factory wired at the same voltage, and phase as the heating elements. All motors are thermally protected and connected to the main supply contactor. On three phase units, **it is necessary to verify that the fan rotation is correct**. Air stream discharge must be out front of unit. After connecting unit to line and closing all covers tightly, energize unit momentarily. If air does not exit front louvers, reverse any two supply leads at the box lugs on the contactor or at the supply disconnect.
5. Either of two 1 NPT rigid conduit openings with integral stop may be used for connection to supply line. (See Figure 9 and 10 for locations) Use only NEC approval hazardous locations means of wiring such as mineral insulated cable and fittings or rigid conduit and seal fittings located as required by installation codes.

⚠WARNING

Explosion Hazard. All unused conduit openings must be fitted with plugs that are U.L. recognized for use in hazardous locations.

6. Heaters may be provided with a built-in control switch and/or thermostat. If not, they should be controlled by an externally mounted disconnect switch and/or separately mounted thermostat as shown in the appropriate wiring diagram on page 6. In case of malfunction, the personnel in the area should be aware of location of heater disconnect.
7. Installation must include appropriate over current protection devices (fusing or circuit breakers) as required by the National Electric Code in the supply line to the unit. Refer to nameplate for proper current ratings.
8. To operate heaters from an externally mounted hazardous location thermostat, a terminal block is provided for connection (Figures 9 and 10). Remove the factory installed jumper across T2 and T3 on the terminal strip. Wire the thermostat contact leads to these terminals. The built in control transformer supplies the unit with either 24V or 120V for internal unit operation. This voltage will appear across the thermostat contacts when they are open. The minimum thermostat contact rating should be 1 amp @ 120 VAC. Refer to nameplate for control voltage of unit. The 1/2 NPT conduit wiring entry on top of the terminal enclosure should be used to wire the thermostat to the heater (Figure 10).
9. Protection against overheating is provided by a manual reset limit control located within the heat exchanger wiring compartment. (Figure 9) Activation of the control will open the control circuit and energize the pilot lamp (if supplied). If normal airflow is restricted, or stopped, the unit will be cycled off by the manual reset cutout. The manual reset limit control is also designed to shut down the unit completely if the fluid level is low or other heater malfunction occurs.

⚠WARNING

Manual reset limit control must never be bypassed in the control circuit. If the limit actuates, shut down unit and investigate cause of abnormal operation. Do not reenergize until the problem has been corrected.

⚠WARNING

The system designer is responsible for the safety of this equipment and should install adequate back-up controls and safety devices with their electric heating equipment. Where the consequences of failute could result in personal injury or property damage, back-up controls are essential.

WIRING DIAGRAMS

DIAGRAM I

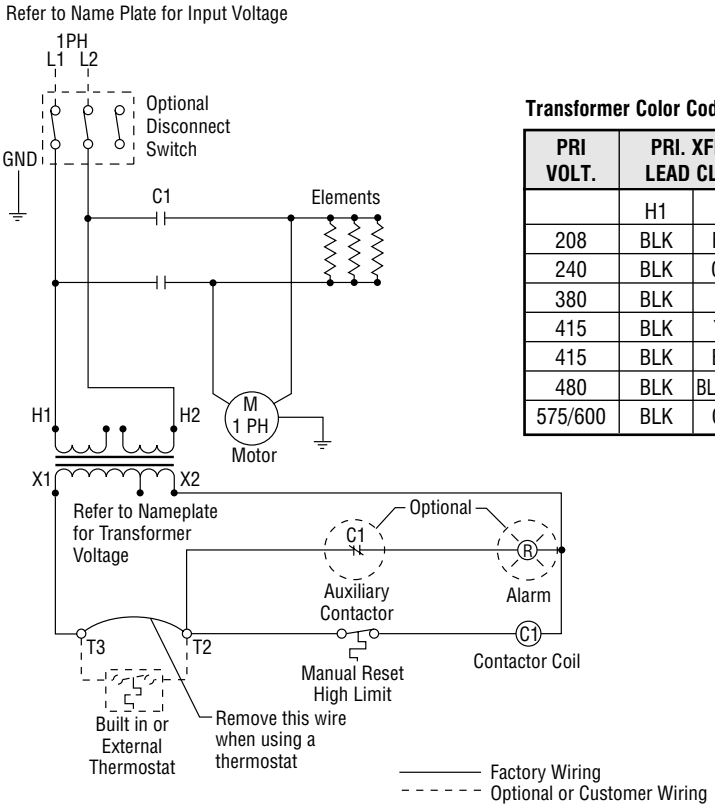

Transformer Color Code Tabulation

PRI VOLT.	PRI. XFMR LEAD CLRS.		120V SEC LEAD CLRS.		24V SEC LEAD CLRS.	
	H1	H2	X1	X2	X1	X2
208	BLK	RED	BLK	WHT	YEL	BLU
240	BLK	ORG	BLK	WHT	YEL	BLU
380	BLK	VIO	BLK	WHT	YEL	BLU
415	BLK	YEL	BLK	WHT	-	-
415	BLK	BRN	-	-	YEL	BLU
480	BLK	BLK/RED	BLK	WHT	YEL	BLU
575/600	BLK	GRY	BLK	WHT	YEL	BLU

DIAGRAM II

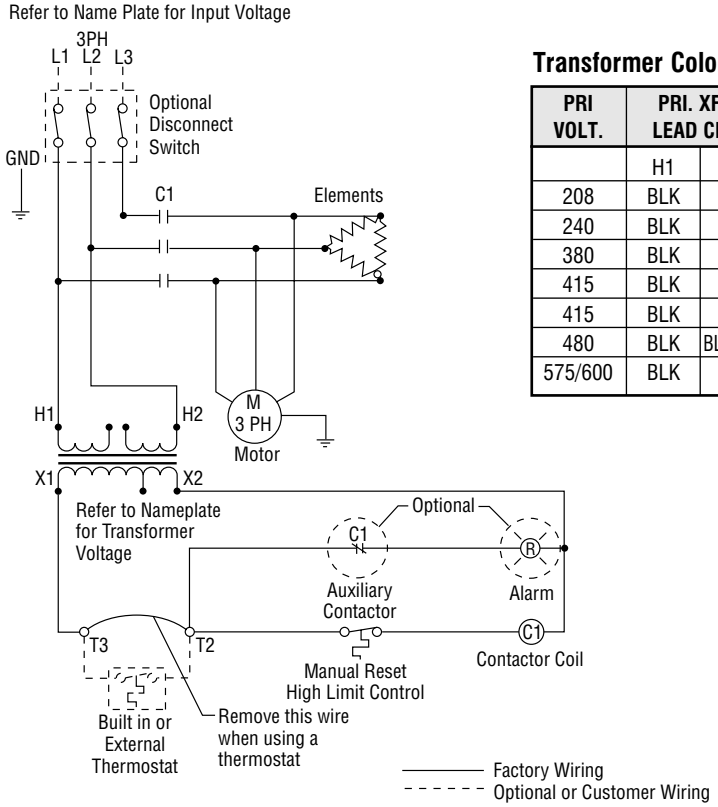

Transformer Color Code Tabulation

PRI VOLT.	PRI. XFMR LEAD CLRS.		120V SEC LEAD CLRS.		24V SEC LEAD CLRS.	
	H1	H2	X1	X2	X1	X2
208	BLK	RED	BLK	WHT	YEL	BLU
240	BLK	ORG	BLK	WHT	YEL	BLU
380	BLK	VIO	BLK	WHT	YEL	BLU
415	BLK	YEL	BLK	WHT	-	-
415	BLK	BRN	-	-	YEL	BLU
480	BLK	BLK/RED	BLK	WHT	YEL	BLU
575/600	BLK	GRY	BLK	WHT	YEL	BLU

MODEL NUMBER DESCRIPTION

X	300	8	1	2	B	T
Series	Wattage	Voltage	Phase	Control	Version	Suffix
Explosion Proof Heater for Hazardous Locations	300=3.0kW 500=5.0kW 750=7.5kW 1000=10.5kW 1500=15.0kW 1800=18.0kW 2000=20.0kW 2500=25.0kW 3000=30.0kW 3500=35.0kW	8=208Volt 4=240Volt 48=480Volt 6=575Volt	1=1 Phase 3=3 Phase	2=24Volt 1*120Volt		T=Thermostat L=Pilot Light (Heater On) K=Pilot Light (Heater Tripped) S=Selector Switch (Fan Only) D=Disconnect Switch (15 Amp 3PH) Disconnect Switch (30 Amp 1PH) Disconnect Switch (30 Amp 3PH) Disconnect Switch (60 Amp)

OPERATION

⚠WARNING

Explosion Hazard. Heater should not be operated in ambient temperature higher than 40°C (104°F) or in atmospheres corrosive to the heater itself.

1. The X-Series unit heaters use a sealed water-glycol filled heat exchanger. The electric immersion elements transfer heat energy directly to the fluid generating a fluid/vapor mixture which releases its heat energy to the finned radiator as it rises and recondenses back to the bottom reservoir to be reheated. This cycle will continue as long as fan forced air is available on the finned structure to remove the heat to the airstream.
2. The finned structure of the heat exchanger must be kept clean and free of accumulated dust and dirt. The cabinet front panel is easily removed providing access to the heater core for periodic cleaning.
3. Unit should not be operated with louvers fully closed. Mechanical stops are incorporated into the design of the cabinet to limit the degree of closure. Do not force the louvers beyond these stops.
4. If specified, units are supplied with a built in alarm pilot lamp which will energize if the manual reset control has a been activated. During unit startup, the lamp will flash on momentarily to verify its operation.

MAINTENANCE AND REPAIR

Maintenance and repair must be performed by qualified personnel only.

⚠WARNING

Explosion/Electric Shock Hazard. Disconnect all power before opening enclosure covers or servicing heaters. Failure to comply could result in personal injury or property damage.

1. Periodically inspect all electrical connections and terminals to avoid electrical wiring difficulties. Inspect all wiring for frayed or worn insulation.
2. Periodically and before each heating season, clean the finned heat exchanger and fan inlet with compresses air, vacuum, or water jet. Be sure all electrical covers are tightly closed.
3. If heat output seems to be low, check amperage draw on each element. Compare measured values to the correct currents as listed on the unit nameplate.
4. The thermally protected fan motor is permanently lubricated and sealed. No field servicing is required or should be attempted. Replace only with a factory supplied identical motor. Failure to do so will void the factory warranty and may expose the user to risk of ignition of hazardous atmospheres.
5. Check fan blade to be sure that set screws are tight and there are no cracks or looseness in the blades. Use factory supplied replacement blade only.
6. Check for any sign of leaking from the heat exchanger. Too little fluid will cause the manual high limit to trip.
7. The sealed heat exchanger contains a glycol/water solution of propylene glycol. Ethylene glycol is supplied for arctic duty conditions only. Avoid contact with skin and eyes. If ingestion should occur, seek medical attention immediately. In case of eyes or skin contact, wash affected areas with large amounts of water. **The MSDS (Material Safety Data Sheet) for these materials is available upon request.**

I. REPLACING THE HEAT EXCHANGER

⚠CAUTION

Burn Hazard. Be sure heat exchanger and fluid has been allowed to cool to 110°F before proceeding.

1. Detach the cabinet front by removing screws from all sides of unit and pulling cover forward off cabinet shell. Detach bottom panel by removing two screws on each side and two screws in the rear. Remove the electrical control enclosure lid. Disconnect the heater and high limit wires from the electrical control enclosure. Loosen electrical conduit union located between the heater housing and the electrical control enclosure. Support the lower end of the heat exchanger and loosen the three hex head bolts which hold it to the sheet metal. Lower the heat exchanger away from the sheet metal. Reverse the above procedure when installing a new heat exchanger.

II. RESETTING MANUAL RESET LIMIT CONTROL

⚠WARNING

Explosion Hazard. Be sure that all enclosure covers are replaced and tightly closed before re-energizing unit after servicing electrical components. High limit controls must never be bypassed in control circuit. The factory must perform the replacement of the immersion heater or overtemperature cutout. The heat exchanger seal must not be broken. Consult factory for service.

The occurrence of the manual reset limit control to trip is an abnormal condition. Care should be taken to determine the exact reason that the high limit control tripped. Possible problem areas could be dirty heat exchanger, blocked air inlet or outlet, fan/motor malfunction, too high operating ambient, incorrect operating voltage, or leaking heat exchanger. In the event that the heat exchanger is defective, it must be replaced.

1. The manual reset limit control is located in the heating element hazardous location enclosure on the heat exchanger which is covered by the sheet metal housing attached to the side of the unit. To gain access, remove the four sheet metal screws holding the sheet metal cover in place and unthread the cast aluminum enclosure lid. (See Figure 11.) The manual reset limit control device has a small reset button protruding from the center of its back housing. Depress this button in to reset the control. Replace the aluminum enclosure lid and sheet metal cover.

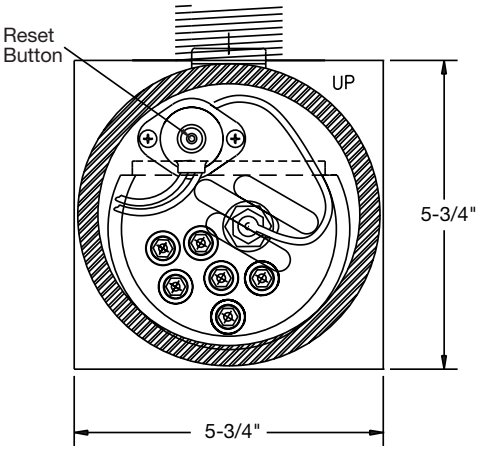

Figure 11

III. FAN MOTOR AND BLADE

1. The motor is a sealed unit that requires no lubrication. If the motor is defective, it must be replaced with an original factory supplied motor. (See renewal parts section.)

2. To replace the motor, proceed as follows:

A. Disconnect the unit from power supply.

B. (Units with motor splice box) Remove 4 bolts and cover of motor splice box (See Figure 12).

C. (Units without motor splice box) Remove 16 bolts and cover of main control enclosure.

D. Note wire connections for future reference and disconnect all wires leading to the motor. All motor wires are permanently marked according to the nameplate on the motor.

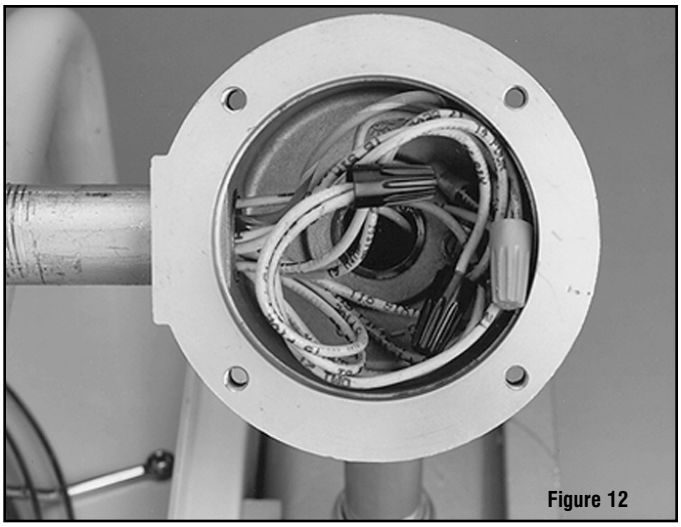

Figure 12

E. Remove 4 bolts in motor base holding it to rear cabinet shelf. See Figure 13.

F. Remove 4 screws holding fan guard to cabinet.

G. Unthread union at motor wiring outlet nipple connection. Carefully lift the motor, fan blade, and guard off of the cabinet.

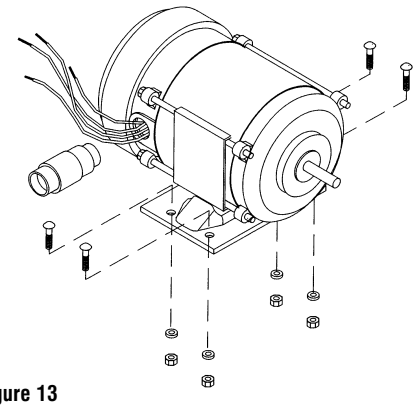

Figure 13

H. Note position of fan blade on motor shaft. Loosen the two set screws to remove the fan blade and key from shaft motor.

I. Place guard and fan blade on replacement motor shaft in same locations as original motor. Align key ways in hub and shaft. Insert key flush with fan hub and tighten the two hub set screws.

J. Feed motor wires back into conduit and reposition motor back on unit. Center fan blade in opening and rotate to be sure that it clears housing and guard.

K. Thread motor nipple connection into conduit union and tighten (5 threads minimum). Replace bolts in motor base and reattach fan guard to back of housing in four places. Recheck blade rotation and tighten all hardware.

L. Trim all motor leads extending out of the conduit to 6 lengths. Strip off 3/8 of insulation at cut ends. Using the motor nameplate, previous notes, and marked wires, reconnect the motor for the unit voltage rating as indicated on the heater nameplate. Re-attach the ground wire to the connection inside the enclosure. Replace cover and tighten securely.

M. Check fan rotation by momentarily energizing the unit. Air must exit at cabinet front. Reverse any 2 leads at contactor or line supply disconnect to reverse rotation of three phase motor.

3. Removal of fan blade does not require that the motor wiring be disturbed. To clean, service or change the fan blade proceed as follows:
   - **A.** Remove the four carriage bolts holding the motor base in place on the cabinet platform. Mark the platform to reposition at same location.
   - **B.** Loosen the four screws on the cabinet back holding the fan guard in place.
   - **C.** Pull the motor to the rear extending the conduit connection at the electrical enclosure. Fan blade and hub set screws can now be accessed by tilting the guard rearward at top or bottom back over the motor shell.

IV. ELECTRICAL COMPONENT SERVICING

⚠WARNING

EXPLOSION/ELECTRIC SHOCK HAZARD. Disconnect all power before opening enclosure covers or servicing heater. Failure to comply could result in personal injury or property damage.

When provided, the following components are located in the cast aluminum hazardous location enclosure. Remove cover and retaining bolts to gain access the following items (See Figure 16):

1. **CONTROL TRANSFORMER**
   This item is located in the electrical enclosure. It may be replaced while in the enclosure. To service or replace remove the quick connect wires and mark their locations. Remove two screws which hold the transformer in place. Note transformer orientation and voltage labels on top. Replace transformer in the same orientation and connect wires. Replace the cast aluminum cover and bolt down.
2. **CONTACTOR**
   This component can be removed from the base plate while in the enclosure. Follow the same steps as indicated for the transformer replacement.
3. **ALARM PILOT LAMP (OPTIONAL)**
   To replace the bulb, unscrew the red lens bezel while holding the lock ring until disengaged. Avoid turning the entire assembly which is held tight to the enclosure with a locking nut on the inside of the enclosure. It must be re-tightened if loosened before reuse. Replace the lamp with a 656 type bulb at the correct control voltage for the unit (120V or 24). Secure the lens cap (5 threads minimum) against the locking ring and tighten securely before re-energizing unit. Lamp should flash on momentarily when unit is energized. See renewal parts section for part number of replacement bulbs.

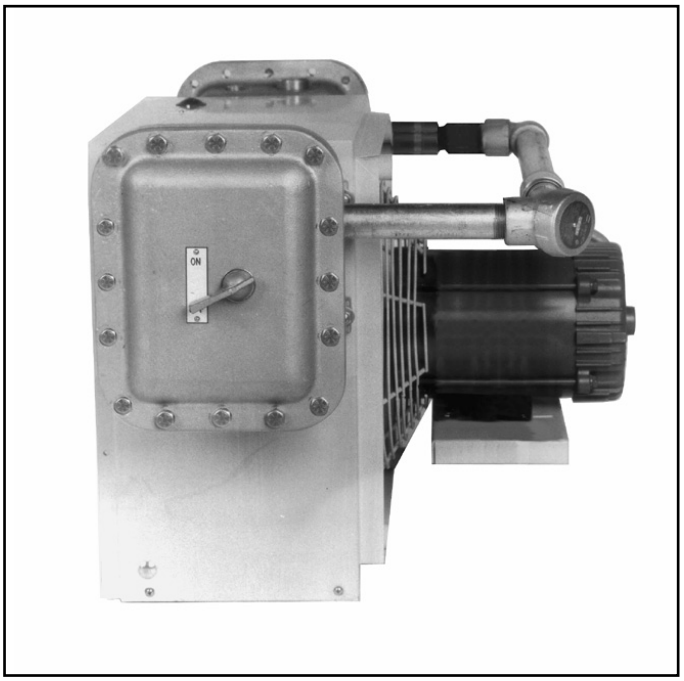

Figure 14
X-Series with Built in Disconnect Switch
(Must use XCMOB Ceiling Mounting Kit)



Figure 15
X-Series with Built in Thermostat

Electrical Control Voltage	24V	120V
Contactor	072-304551-002	072-304551-008
Transformer 208/240/480 PRI	315-304252-002	315-304252-001
Transformer 575 PRI	315-304252-005	315-304252-003
Aux. Contactor	072-304551-102	072-304551-102

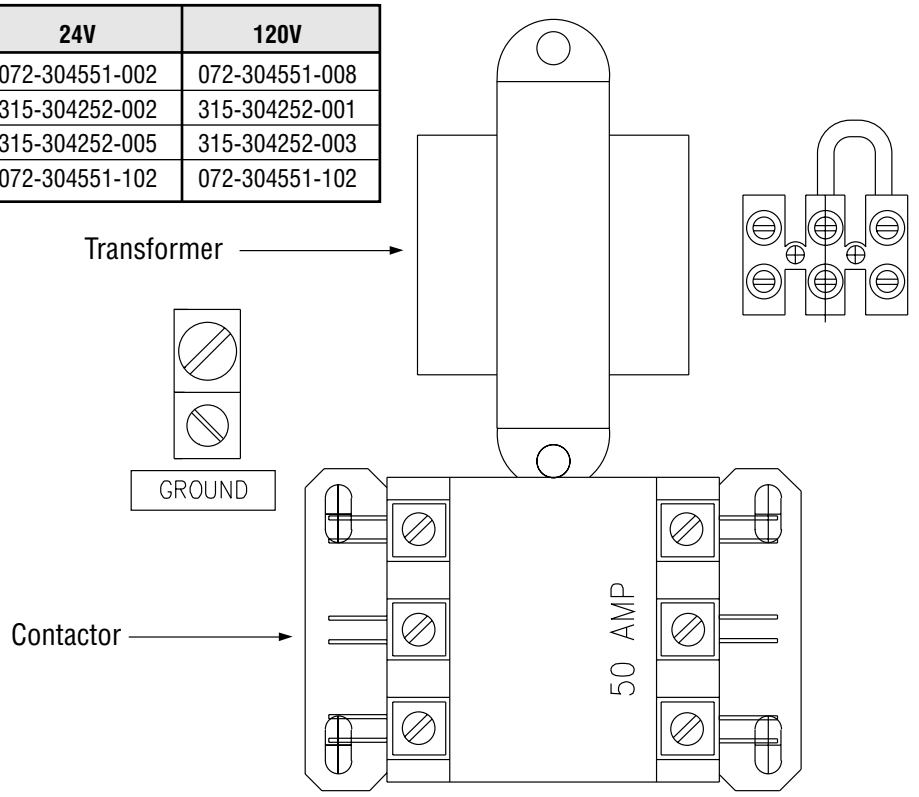

Figure 16

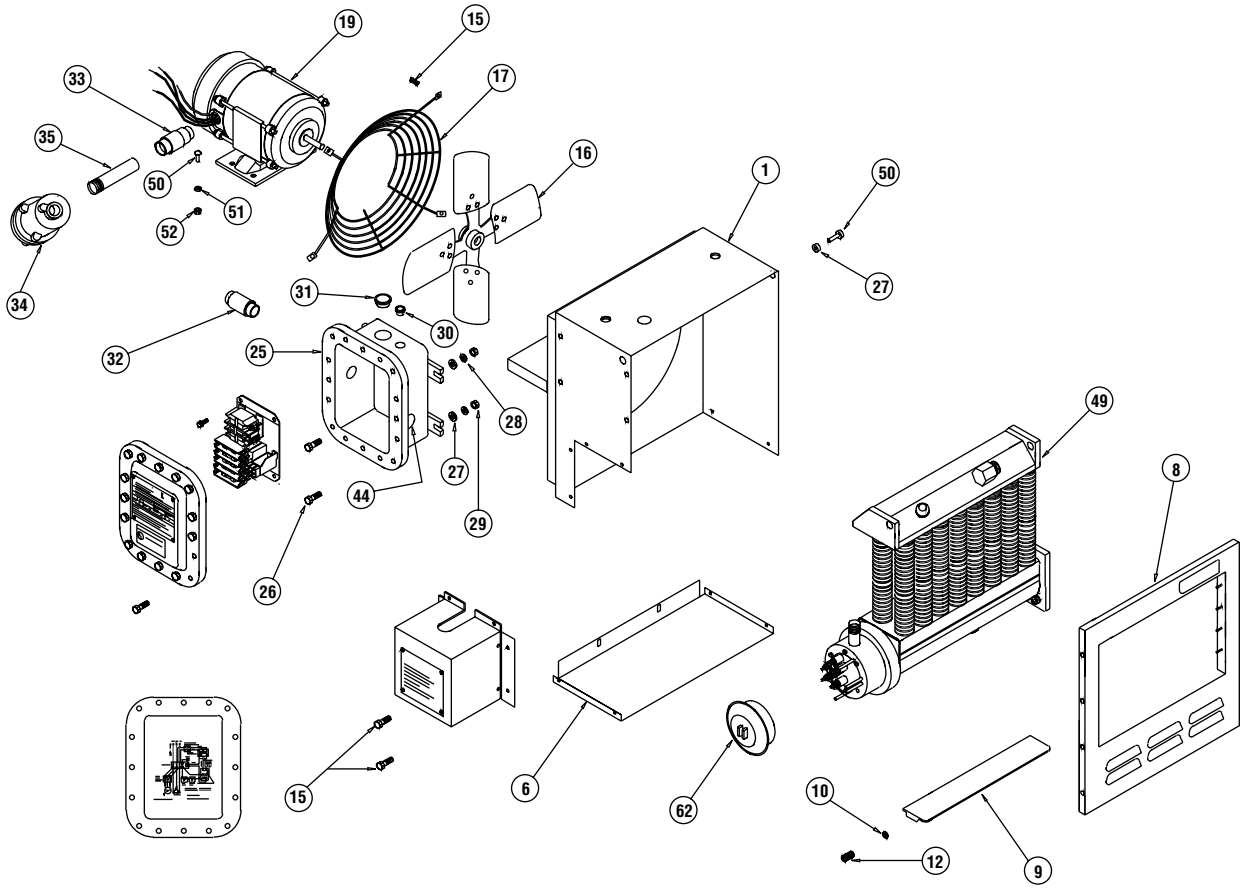

Figure 17

RENEWAL PARTS IDENTIFICATION

Common Parts Shown in Figure 17

Item#	Description	3, 5, 7.5 &10 Part No.	15 &18 Part No.	25, 30 & 35 Part No.
1	Panel wrapper	207-303891-001	207-303891-002	207-303891-003
6	Panel Bottom	207-303881-001	207-303881-002	207-303881-003
8	Panel Front	207-303883-001	207-303883-002	207-303883-003
9	Louver	182-303884-001	182-303884-002	182-303884-003
10	Washer Shoulder	328-302074-002	328-302074-002	328-302074-002
12	Spring	276-130386-001	276-130386-001	276-130386-001
14	Terminal Box Cover	080-302079-001	080-302079-001	080-302079-001
15	Screw 10-32	248-073662-002	248-073662-002	248-073662-002
16	Fan Blade	Consult Factory	Consult Factory	Consult Factory
17	Fan Guard	134-302063-004	134-302063-005	134-302063-006
25	Enclosure	347-123273-131	347-123273-131	347-123273-131
26	Bolt 3/8-16, 1.5 lg	345-075603-263	345-075603-263	345-075603-263
27	Washer flat	328-075528-085	328-075528-085	328-075528-085
28	Washer lock	328-075571-011	328-075571-011	328-075571-011
29	Hex Nut 3/8-16	200-075473-044	200-075473-044	200-075473-044
30	Plug conduit 1/2"	221-302180-001	221-302180-001	221-302180-001
31	Plug conduit 1"	221-302180-003	221-302180-003	221-302180-003
32	Union conduit 3/4"	354-302165-001	354-302165-001	354-302165-001
33	Union conduit 3/4"	354-302243-001	354-302243-001	354-302243-001
34	Conduit Box	Consult factory	069-304115-002	069-304115-002
35	Conduit 3/4"	Consult factory	Consult factory	Consult factory
44	Plug conduit 3/4"	221-302180-002	221-302180-002	221-302180-002
50	Bolt 5/16-18	345-075603-218	345-075603-218	345-075603-218
51	Washer	328-075571-010	328-075571-010	328-075571-010
52	Nut 5/16-18	200-075473-039	200-075473-039	200-075473-039
62	Cover Exp. Proof	080-042350-007	080-042350-007	080-042350-007
75	Conduit 3/4	069-115087-049	069-115087-079	069-115087-093

Optional Equipment Parts	
Description	**Part Number**
Thermostat	300-113075-003
15 Amp Disconnect - 3PH	104-304328-003
30 Amp Disconnect - 1PH	104-304328-004
30 Amp Disconnect - 3PH	104-304328-001
60 Amp Disconnect	104-304328-002
Pilot Light Ass'y 24V	213-121103-017
Pilot Light Ass'y 120V	213-121103-018
Pilot Lamp 24V	172-052561-004
Pilot Lamp 120V	172-052561-003

Mounting Kit Adapter	
3 through 10	027-302361-001
15 through 20	027-302361-002
25 through 35	027-302361-003

Motor, Element and Heat Exchanger Parts

Model	1/4 HP Motor Item 19	Heat Exchanger* Item 49
X300812B	193-302087-006	353-304167-001
X300832B	193-302087-007	353-304167-001
X300412B	193-302087-006	353-304167-002
X300432B	193-302087-007	353-304167-002
X3004832B	193-302087-007	353-304167-005
X300632B	193-302087-008	353-304167-006
X500812B	193-302087-006	353-304167-008
X500832B	193-302087-007	353-304167-008
X500412B	193-302087-006	353-304167-009
X500432B	193-302087-007	353-304167-009
X5004832B	193-302087-007	353-304167-012
X500632B	193-302087-008	353-304167-013
X750812B	193-302087-006	353-304168-001
X750832B	193-302087-007	353-304168-001
X750412B	193-302087-006	353-304168-002
X750432B	193-302087-007	353-304168-002
X7504832B	193-302087-007	353-304168-005
X750632B	193-302087-008	353-304168-006
X1000832B	193-302087-007	353-304168-008
X1000412B	193-302087-006	353-304168-009
X1000432B	193-302087-007	353-304168-009
X10004832B	193-302087-007	353-304168-012
X1000632B	193-302087-008	353-304168-013
X1500832B	193-302087-007	353-304169-001
X1500432B	193-302087-007	353-304169-002
X15004832B	193-302087-007	353-304169-005
X1500632B	193-302087-008	353-304169-006
X1800432B	193-302087-007	353-304169-008
X20004832B	193-302087-007	353-304169-012
X2000632B	193-302087-008	353-304169-013
	1/2 HP Motors	
X25004832B	193-302087-009	353-304170-003
X2500632B	193-302087-010	353-304170-004
X30004832B	193-302087-009	353-304170-008
X3000632B	193-302087-010	353-304170-009
X35004832B	193-302087-009	353-304170-012
X3500632B	193-302087-010	353-304170-013

* For arctic duty conditions, heat exchanger with ethylene glycol are required. Consult factory.

⚠WARNING

The factory must perform the replacement of the immersion heater or overtemperature cutout. The heat exchanger seal must not be broken. Consult factory for service.

LIMITED WARRANTY

All products manufactured by Marley Electric Heating are warranted against defects in workmanship and materials for one year from date of installation. This warranty does not apply to damage from accident, misuse, or alteration; nor where the connected voltage is more than 5% above the nameplate voltage; nor to equipment improperly installed or wired or maintained in violation of the product's installation instructions. All claims for warranty work must be accompanied by proof of the date of installation.

The customer shall be responsible for all costs incurred in the removal or reinstallation of products, including labor costs, and shipping costs incurred to return products to Marley Electric Heating Service Center. Within the limitations of this warranty, inoperative units should be returned to the nearest Marley authorized service center or the Marley Electric Heating Service Center, and we will repair or replace, at our option, at no charge to you with return freight paid by Marley. It is agreed that such repair or replacement is the exclusive remedy available from Marley Electric Heating.

THE ABOVE WARRANTIES ARE IN LIEU OF ALL OTHER WARRANTIES EXPRESSED OR IMPLIED. AND ALL IMPLIED WARRANTIES OF MERCHANTABILITY AND FITNESS FOR A PARTICULAR PURPOSE WHICH EXCEED THE AFORESAID EXPRESSED WARRANTIES ARE HEREBY DISCLAIMED AND EXCLUDED FROM THIS AGREEMENT. MARLEY ELECTRIC HEATING SHALL NOT BE LIABLE FOR CONSEQUENTIAL DAMAGES ARISING WITH RESPECT TO THE PRODUCT, WHETHER BASED UPON NEGLIGENCE, TORT, STRICT LIABILITY, OR CONTRACT.

Some states do not allow the exclusion or limitation of incidental or consequential damages, so the above exclusion or limitation may not apply to you. This warranty gives you specific legal rights, and you may also have other rights, which vary, from state to state.

For the address of your nearest authorized service center, contact Marley Electric Heating in Bennettsville, SC, at 1-800-642-4328. Merchandise returned to the factory must be accompanied by a return authorization and service identification tag, both available from Marley Electric Heating. When requesting return authorization, include all catalog numbers shown on the products.

How to order repair parts:
In order to obtain any needed repair or replacement parts, warranty service or technical information, please contact the Marley Electric Heating Service Center toll-free by calling 1-800-642-HEAT.
When ordering replacement parts, always give the information listed as follows:

1. The Part Number
2. The Model Number
3. The Part Description
4. Date of Manufacture

Marley
Engineered Products
470 Beauty Spot Road, E
Bennettsville, SC 29550 USA

PPD031
5200-2474-000

Rev. 2
TA - R2 - EF
Litho in U.S.A.