Marley
Engineered Products

SERVICE REFERENCE

SALES REFERENCE **5200-2639-000**

161-302432-003

DATE **APRIL, 2003**

INSTALLATION, OPERATION
RENEWAL PARTS IDENTIFICATION

Mounting Kits for X Series Forced Air Heaters

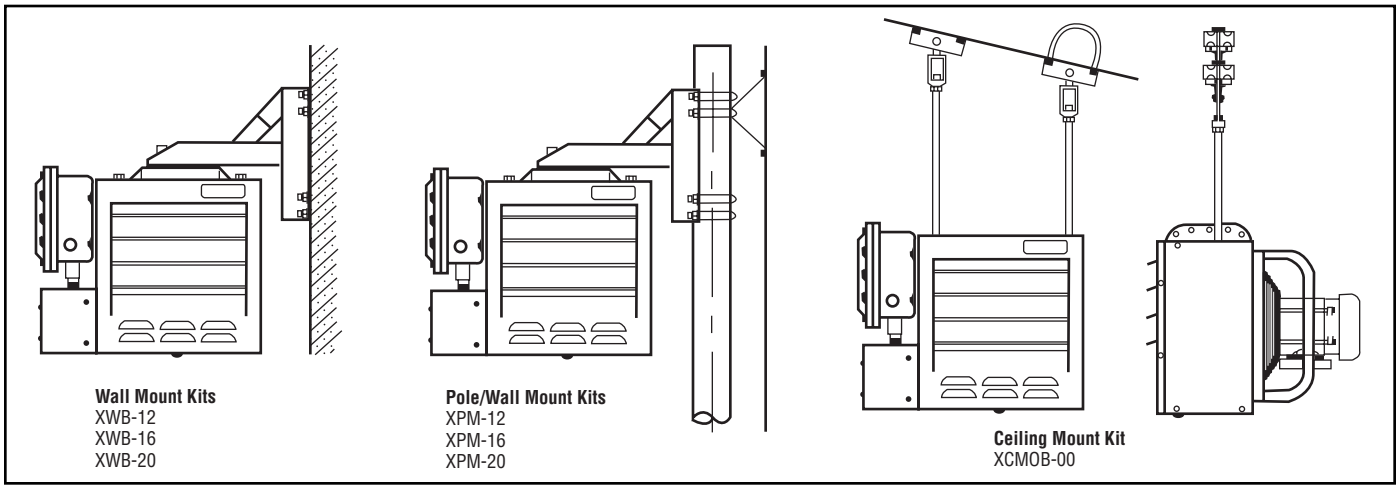

Wall Mount Kits
XWB-12
XWB-16
XWB-20

Pole/Wall Mount Kits
XPM-12
XPM-16
XPM-20

Ceiling Mount Kit
XCMOB-00

IMPORTANT

CAUTION: ***In order to prevent equipment damage the wall or ceiling mounting structure and the anchoring components must be of sufficient strength to support the combined weight of the heater and mounting brackets. (Refer to Table A in Service Reference 5200-2474-000 for weight of heater.)***

Adequate stiffness should be provided to ensure that unwanted vibrations or movements of the complete system do not occur. Such vibrations or movement could be induced by electric motor start-up, or be transmitted to the heater from the structure to which it is mounted, as in mobile installations. Where heaters are installed in applications that are of a relocatable or transportable nature (such as drilling rigs) design the mounting structure to withstand all probable load conditions. Such load conditions should recognize accidental situations such as truck off-loading impacts.

For complete installation, operation and maintenance instructions refer to Service Reference Bulletin 5200-2474-000.

INSTALLATION

CAUTION: ***In order to prevent nuisance tripping of the overtemperature cutout or heater damage mount only in upright position and observe nameplate mounting clearances.***

Heater Location Instructions:

Arrange units so their discharge air streams:

- **A.** are subjected to a minimum of interference from columns, machinery and partitions.
- **B.** wipe exposed walls without blowing directly at them.
- **C.** are directed away from room occupants in comfort heating.
- **D.** are directed along the windward side when installed in a building exposed to a prevailing wind.

Locate thermostat on interior partition walls or posts away from cold drafts, internal heat sources and away from heater discharge air streams.

Small rooms can be heated by one unit heater. Where two walls are exposed, the heater should be mounted as shown in Figure 1. Large rooms require multi-unit installations. Number and capacity of units will be determined by volume of building and square feet of floor area to be heated. Arrange units to provide perimeter air circulation where each unit supports the air stream from another.

The X Series hazardous location heaters are designed for use only in a permanently mounted upright position. We recommend the use of a mounting kit (ceiling, wall or pole) available from Marley.

The ceiling or wall mounting surface and the anchoring provision must be sufficient to support the combined weights of the unit and mounting hardware.

If using mounting hardware or a supporting structure not supplied by Marley, the unit should be suspended from the supporting structure thru the two mounting points on top of the unit with $^{5}/_{8}$ NC bolts and lockwashers. If single point mounting is desired, order the correct size adapter bracket (P/N 027-302361-001 for 12" fan units, P/N 027-302361-002 for 16" fan units, and P/N 027-302361-003 for 20" fan units Figure 2). This bracket is designed to hold the unit over its center of gravity with a 1" Dia. bolt. The maximum tilt angles, as shown in Figure 3, must not be exceeded in either direction during operation and installation. Failure to comply will cause high limit shut down.

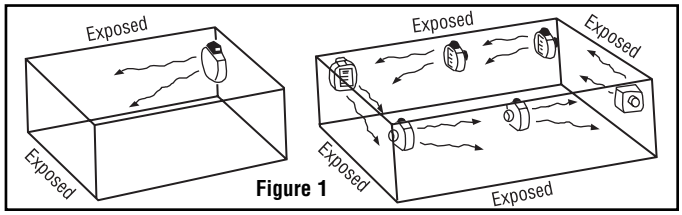

Figure 1

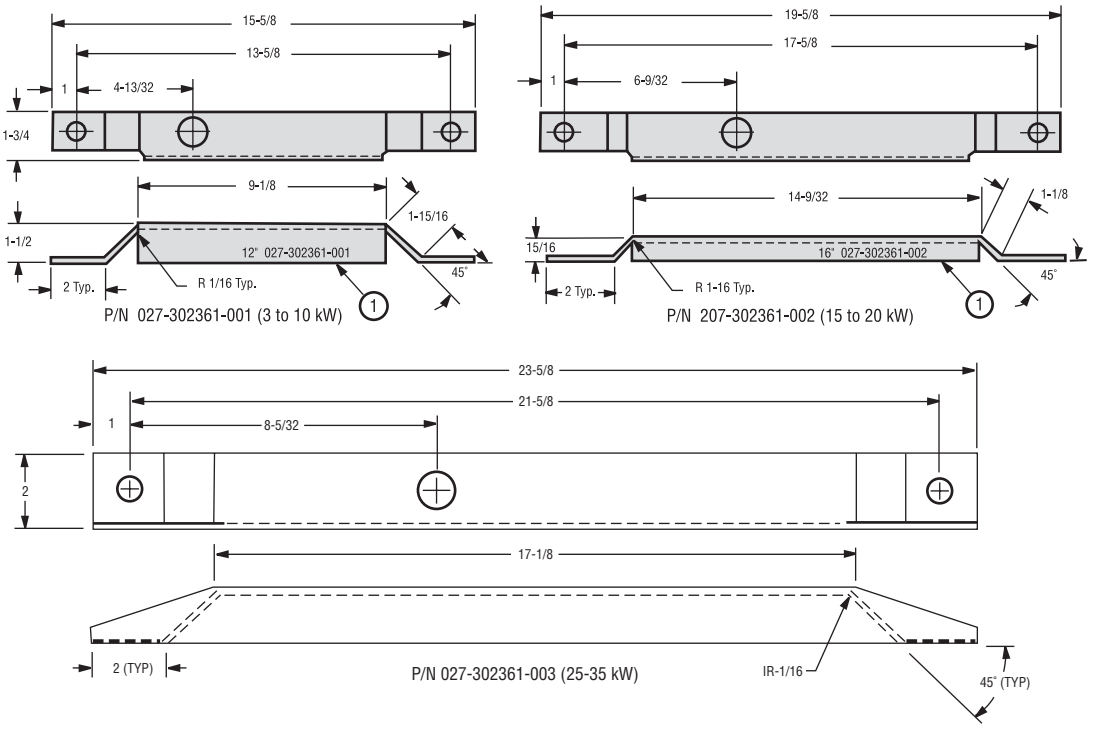

Figure 2

The heaters may be mounted at any convenient height above floor. The minimum spacings, shown in Figure 4, should be maintained to adjacent walls and ceiling. If floor heat is desired, do not mount higher than 8' to 10' above floor.

Controlling thermostats to individual heaters should be mounted at shoulder height on inside walls or columns and clear of the discharge air stream of the unit. Allow at least 4' in front of heater for air stream to discharge freely. Do not mount mercury type thermostat directly on units, vibration could cause malfunction.

Heater may be mounted on a shelf or stand from the bottom. Be sure the mounting clearances are maintained and that bottom of unit has at least 1' clearance underneath it. This is necessary for good air circulation and servicing of heat exchanger. All mounting methods must allow for removal of front cover.

The mounting and anchoring provisions must take into account the unit vibration and cantilevered loading when wall or pole mounted. One of the mounting kits, shown in Figure 5, 6 and 7, must be used whenever possible.

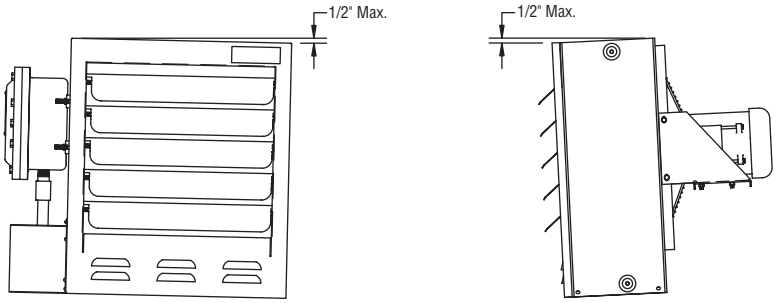

Figure 3 — Maximum Out of Plane Allowance

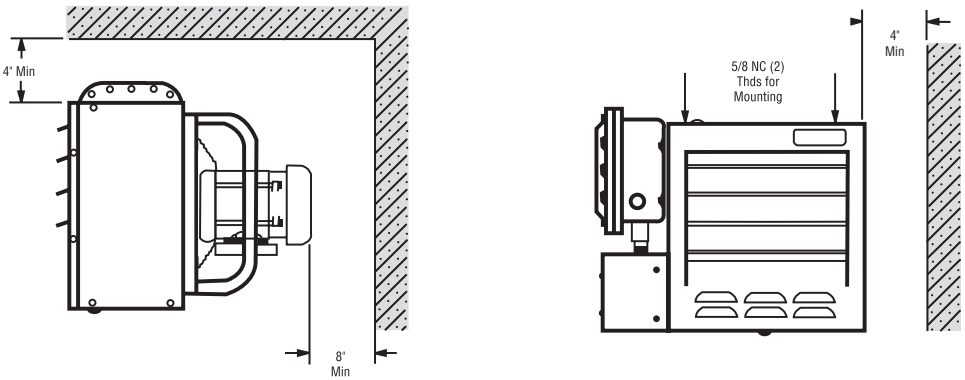

Figure 4 — Installation Clearances

MOUNTING KITS

Wall Mount Kit
Model XWB-12, 12" Fan (3-10 kW)
Model XWB-16, 16" Fan (15-10 kW)
Model XWB-20, 20" Fan (25-35 kW)

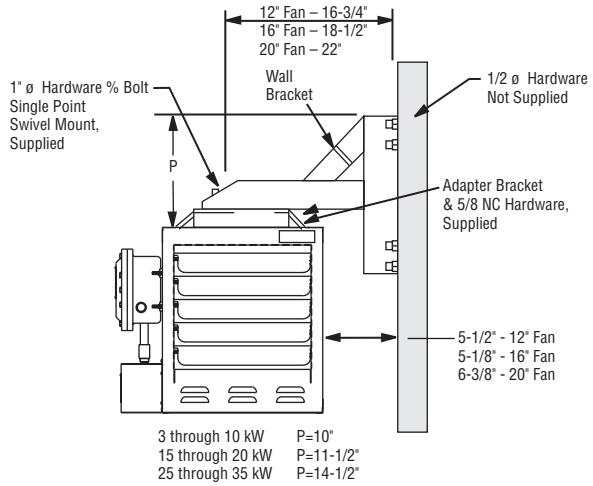

Figure 5

Pole or Wall Mount Kit
Model XPM-12, 12" Fan (3-10 kW)
Model XPM-16, 16" Fan (15-20 kW)
Model XPM-20, 20" Fan (25-35 kW)

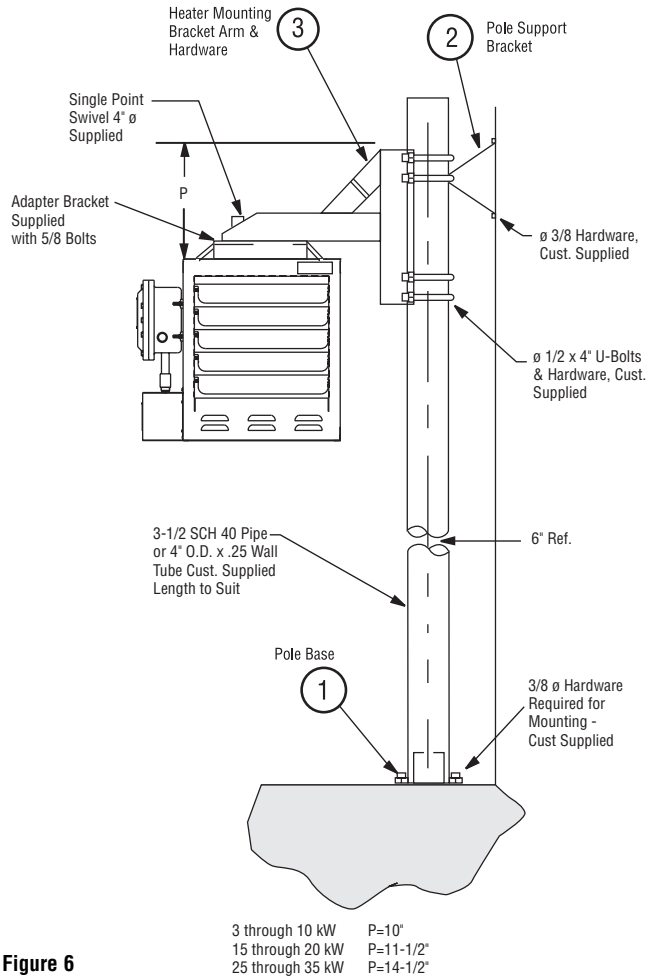

Figure 6

Ceiling Mounting Kit
Model XCMOB

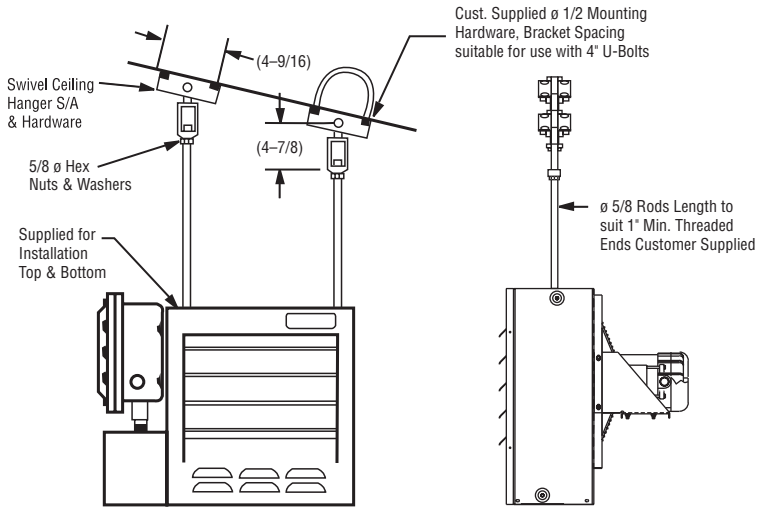

Figure 7

RENEWAL PARTS IDENTIFICATION

Parts Common to Wall and Pole Mounting Kits

Parts Description	XWM-12, XPM-12 — 12" Fan (3-10 kW)	XWM-16, XPM-16 — 16" Fan (15-20 kW)	XWM-20, XPM-20 — 20" Fan (25-35 kW)
Mounting Bracket	027-302359-004	027-302359-005	027-302359-006
Adapter Bracket	027-302361-001	027-302361-002	027-302361-003
1" Swivel Mount Bolt	345-075604-326	345-075604-326	345-075604-326
1" Swivel Mount Nut	200-075473-146	200-075473-146	200-075473-146
1" Swivel Mount Flat Washer	328-024326-045	328-024326-045	328-024326-045
5/8" Adapter Bolt	345-075604-045 (2)	345-075604-045 (2)	345-075604-045 (2)
5/8" Adapter Lock Washer	328-075571-019 (2)	328-075571-019 (2)	328-075571-019 (2)
1" Swivel Mount Lock Washer	328-075571-023	328-075571-023	328-075571-023

Parts Common to PMB Mounting Kits Only

Parts Description	XPM-12, 12" Fan (3-10 kW) XPM-16, 16" Fan (15-20 kW) XPM-20, 20" Fan (25-35 kW)
Pole Support Bracket	027-302362-001
Pole Support Base	015-302363-001

Parts Common to Ceiling Mounting Kit

Parts Description	XCMOB 12", 16", and 20" Fan
Hanger Bracket	027-320360-001(4)
Hanger Turnbuckle	140-302379-001 (2)
Cross Bolt 1/2"	345-075603-335 (2)
Cross Bolt Nut 1/2"	200-075473-056 (2)
Cross Bolt Lock Washer	328-075571-013 (2)
5/8" Lock Nut	328-075571-019 (4)
5/8" Hex Nut	200-075473-129 (4)

LIMITED WARRANTY

All products manufactured by Marley Electric Heating are warranted against defects in workmanship and materials for one year from date of installation. This warranty does not apply to damage from accident, misuse, or alteration; nor where the connected voltage is more than 5% above the nameplate voltage; nor to equipment improperly installed or wired or maintained in violation of the product's installation instructions. All claims for warranty work must be accompanied by proof of the date of installation.

The customer shall be responsible for all costs incurred in the removal or reinstallation of products, including labor costs, and shipping costs incurred to return products to Marley Electric Heating Service Center. Within the limitations of this warranty, inoperative units should be returned to the nearest Marley authorized service center or the Marley Electric Heating Service Center, and we will repair or replace, at our option, at no charge to you with return freight paid by Marley. It is agreed that such repair or replacement is the exclusive remedy available from Marley Electric Heating.

THE ABOVE WARRANTIES ARE IN LIEU OF ALL OTHER WARRANTIES EXPRESSED OR IMPLIED. AND ALL IMPLIED WARRANTIES OF MERCHANTABILITY AND FITNESS FOR A PARTICULAR PURPOSE WHICH EXCEED THE AFORESAID EXPRESSED WARRANTIES ARE HEREBY DISCLAIMED AND EXCLUDED FROM THIS AGREEMENT. MARLEY ELECTRIC HEATING SHALL NOT BE LIABLE FOR CONSEQUENTIAL DAMAGES ARISING WITH RESPECT TO THE PRODUCT, WHETHER BASED UPON NEGLIGENCE, TORT, STRICT LIABILITY, OR CONTRACT.

Some states do not allow the exclusion or limitation of incidental or consequential damages, so the above exclusion or limitation may not apply to you. This warranty gives you specific legal rights, and you may also have other rights, which vary, from state to state.

For the address of your nearest authorized service center, contact Marley Electric Heating in Bennettsville, SC, at 1-800-642-4328. Merchandise returned to the factory must be accompanied by a return authorization and service identification tag, both available from Marley Electric Heating. When requesting return authorization, include all catalog numbers shown on the products.

How to order repair parts:
In order to obtain any needed repair or replacement parts, warranty service or technical information, please contact the Marley Electric Heating Service Center toll-free by calling 1-800-642-HEAT.
When ordering replacement parts, always give the information listed as follows:

1. The Part Number
2. The Model Number
3. The Part Description
4. Date of Manufacture

Marley Engineered Products

470 Beauty Spot Road, E
Bennettsville, SC 29550 USA

PPD031
5200-2474-000

Rev. 1
TA - P2 - EF
Litho in U.S.A.