Marley Engineered Products

W Series
(Model C)
Corrosion Resistant Heater

Installation & Maintenance Instructions

Dear Owner,

Congratulations! Thank you for purchasing this new heater by Marley Engineered Products. You have made a wise investment selecting the highest quality product in the heating industry. Please carefully read the installation and maintenance instructions shown in this manual. You should enjoy years of efficient heating comfort with this product from Marley Engineered Products... the industry's leader in design, manufacturing, quality and service.

... The Employees of
Marley Engineered Products





Model	Electrical Data (60 HZ)					Approx. Air Temp. Rise (°F)	Approx. Air Velocity (Ft./Min.)	Air Volume (CFM)	Horizontal Air Throw (Ft.)	Approx. Net. Wt. (Lbs.)
	Volts	kW	Phase	Amps	BTU					
W20011CTLS	120	2.0	1	16.7	6,824	21	430	405	12	56
W20081CTLS	208		1	9.6						
W20041CTLS	240		1	8.3						
W30011CTLS	120	3.0	1	25.0	10,236	31	430	405	12	56
W30081CTLS	208		1	14.4						
W30041CTLS	240		1	12.5						
W30071CTLS	277		1	10.8						
W50081CTLS	208	5.0	1	24.0	17,060	40	430	405	12	68
W50041CTLS	240		1	20.8						
W50071CTLS	277		1	18.1						
W500481CTLS	480		1	10.4						
W50083CTLS	208		3	13.9						
W50043CTLS	240		3	12.0						
W500483CTLS	480		3	6.0						
W50063CTLS	575		3	5.0						
W75081CTLS	208	7.5	1	36.1	25,590	37	640	590	13	68
W75041CTLS	240		1	31.3						
W75071CTLS	277		1	27.1						
W750481CTLS	480		1	15.6						
W75083CTLS	208		3	20.8						
W75043CTLS	240		3	18.1						
W750483CTLS	480		3	9.0						
W75063CTLS	575		3	7.5						
W100041CTLS	240	10.0	1	41.7	34,120	28	800	1180	40	78
W100071CTLS	277		1	36.1						
W1000481CTLS	480		1	20.8						
W100083CTLS	208		3	27.8						
W100043CTLS	240		3	24.1						
W1000483CTLS	480		3	12.0						
W100063CTLS	575		3	10.1						
W125071CTLS	277	12.5	1	45.1	42,650	36	800	1180	40	78
W1250481CTLS	480		1	26.0						
W125083CTLS	208		3	34.7						
W125043CTLS	240		3	30.1						
W1250483CTLS	480		3	15.1						
W125063CTLS	575		3	12.6						
W1500481CTLS	480	15.0	1	31.3	51,180	32	900	1330	45	78
W150083CTLS	208		3	41.7						
W150043CTLS	240		3	36.1						
W1500483CTLS	480		3	18.1						
W150063CTLS	575		3	15.1						
W200041CTLS	240	19.5	3	47.0	66,534					
W2000481CTLS	480	20.0	1	41.7	68,240	42	900	1330	45	78
W2000483CTLS	480		3	24.1						
W200063CTLS	575		3	20.1						
W2500483CTLS	480	25.0	3	30.1	85,300	31/42	1110/740	2700/1800	48	90
W250063CTLS	575		3	25.1						
W3000483CTLS	480	30.0	3	36.1	102,360	31/42	1110/740	2700/1800	48	90
W300063CTLS	575		3	30.2						
W3500483CTLS	480	35.0	3	42.1	119,420	31/42	1110/740	2700/1800	48	90
W350063CTLS	575		3	35.2						
W3900483CTLS	480	39.0	3	47.0	133,068	31/42	1110/740	2700/1800	48	90
W390063CTLS	575		3	39.2						

SAVE THESE INSTRUCTIONS

⚠ WARNING ⚠

FAILURE TO UNDERSTAND AND FOLLOW THESE INSTRUCTIONS AND THE "WARNING" NOTES THEREIN MAY RESULT IN SERIOUS PERSONAL INJURY FROM ELECTRICAL SHOCK, OR FROM THE HEATER FALLING DUE TO FAULTY INSTALLATION.

1. **This heater is not intended for use in hazardous atmospheres where flammable vapors, gases, liquids or other combustible atmospheres are present as defined in the National Electrical Code. Failure to comply can result in explosion or fire.**
2. **ELECTRIC SHOCK HAZARD. Disconnect all power before installing or servicing heater. Failure to do so could result in personal injury or property damage. Heater must be installed by a qualified person in accordance with the National Electrical Code, NFPA 70.**
3. **ELECTRIC SHOCK HAZARD. Any installation involving electric heaters must be performed by a qualified person and must be effectively grounded in accordance with the National Electrical Code to eliminate shock hazard.**
4. **Do not mount mercury type thermostat directly on unit. Vibration could cause heater to malfunction.**
5. **The heater must be mounted at least 7' above the floor to avoid accidental contact with the heating elements or fan blade which could cause injury.**
6. **Keep at least 5' clearance in front of the heater. Refer to Figure 1 for side, top and back clearance requirements.**
7. **The ceiling mounting structure and the anchoring provisions must be of sufficient strength to support the combined weight of the heater and mounting bracket.**
8. **The wall or mounting surface, and the anchoring provisions must be capable of supporting the combined weight of the heater and the mounting brackets cantilevered from the mounting surface.**
9. **Fan blade rotation must be checked. If airflow is not moving out through the louvers, interchange any two of the three customer power leads on three-phase units only.**

SAVE THESE INSTRUCTIONS

GENERAL

Heater Location Instructions:
Arrange units so their discharge air streams:

A. Are subjected to minimum interference from columns, machinery and partitions.
B. Wipe exposed walls without blowing directly at them.
C. Are directed away from room occupants in comfort heating.
D. Are directed along the windward side when installed in a building exposed to a prevailing wind.

Locate thermostat on interior partition walls or posts away from cold drafts, internal heat sources and away from heater discharge air streams.

Small rooms can be heated by one unit heater. Where two walls are exposed, the heater should be mounted as shown in Figure A.

Large rooms require multi-unit installations. Number and capacity of units will be determined by volume of building and square feet of floor area to be heated. Arrange units to provide perimeter air circulation where each unit supports the air stream from another.

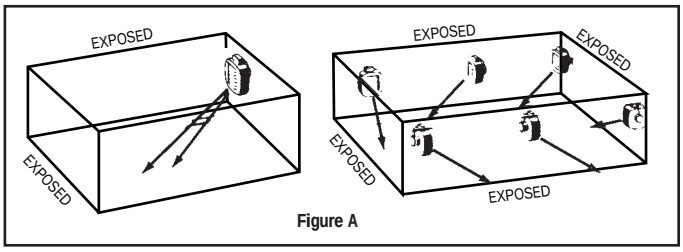

Figure A

FIXED MOUNTING (OPTIONAL)

NOTICE — These heaters are designed for wall and ceiling mount. Other modes of mounting voids factory warranty.

Mounting Heaters with the Standard "L" Brackets (Optional - Model FMB1)
Vertical Airflow

1. Height above floor
   A. It is recommended that heater only be used with ceiling heights of 12 feet or greater. Minimum spacing to ceiling is 12 inches, use 1/2" thread stock (supplied by others) as shown in Figure 2.
   B. Mimimum mounting height is 10 feet from floor to bottom of heater (Figure 2)
2. Spacing to walls
   A. Side of case to walls 18". (See Figure 2.)

Horizontal Airflow (Non-Swiveling)

1. Height above floor
   A. In areas where ceiling height is more than 12 feet, recommended mounting height is approximately 10 feet to underside of heater.
   B. For ceiling heights of 12 feet or less, maximum mounting height is determined by use of the mounting bracket offered for these heaters. Minimum spacing to ceiling is 9". (See Figure 1.)
   C. In either case the minimum mounting height is 7 feet from floor to bottom of heater. (Figure 1)
2. Spacing to adjacent walls (See Figure 1).
   A. Rear of case to back wall 1-1/2" minimum.
   B. Side of case to side wall 8" minimum.

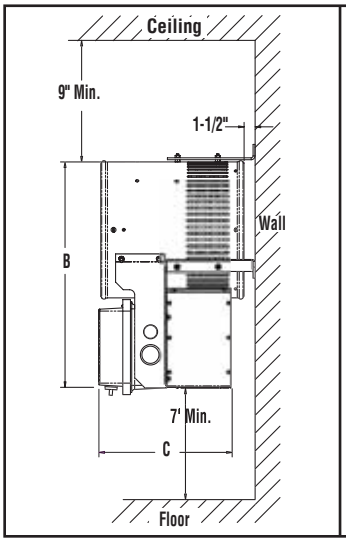

Figure 1

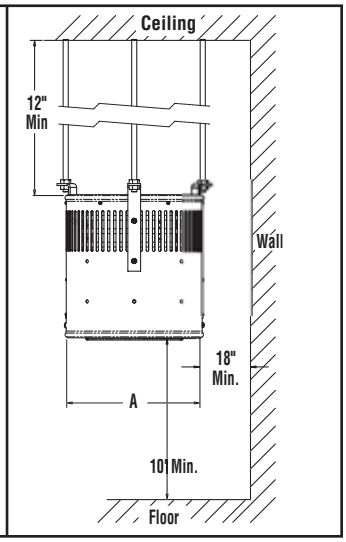

Figure 2

kW	Dimensions (In.)		
	A	B	C
2.5-7.5	13-1/2	24-1/2	15
10.0-20.0	17-1/4	28	15-1/8
25.0-39.0	21-1/4	32-1/4	19-1/2

MOUNTING (UNIVERSAL SWIVEL MOUNTING)

NOTICE — These heaters are designed for wall and ceiling mount. Other modes of mounting voids factory warranty.

Mounting Heaters with supplied Universal Mounting Bracket (Swivel Type)

Horizontal Air Flow

1. Height above floor
   - **A.** In areas where ceiling height is more than 12 feet, recommended mounting height is approximately 10 feet to underside of heater.
   - **B.** For ceiling heights of 12 feet or less, maximum mounting height is determined by use of the mounting bracket offered for these heaters. Minimum spacing to ceiling is 9". (See Figure 3.)
   - **C.** In either case the minimum mounting height is 7 feet from floor to bottom of heater. (Figure 3)
2. Spacing to adjacent walls (See Figure 3).
   - **A.** Rear of case to back wall 8" minimum.
   - **B.** Side of case to side wall 8" minimum.

Note: For all horizontal air flow applications

If two or more units are operated in the same enclosed air space, their discharges should be directed to aid in development of mass air movement for uniform heat dispersal.

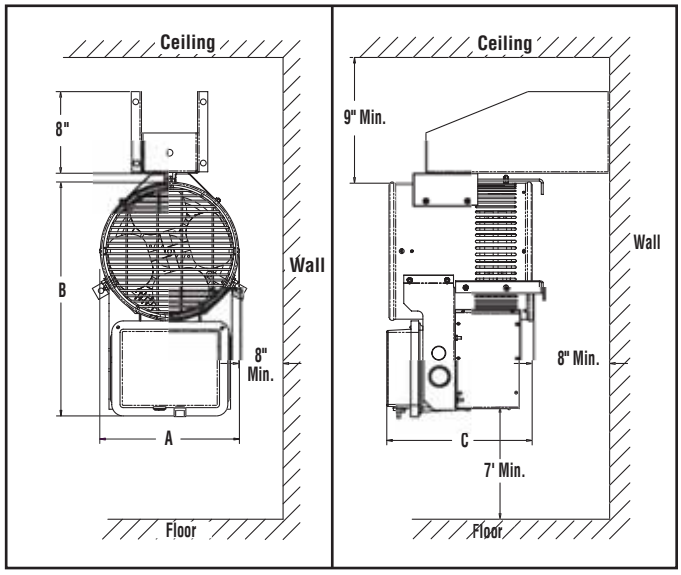

Figure 3

kW	Dimensions (In.)		
	A	B	C
2.5-7.5	13-1/2	24-1/2	15
10.0-20.0	17-1/4	28	15-1/8
25.0-39.0	21-1/4	32-1/4	19-1/2

Fixed Mounting (Option)

kW	Dimensions (In.)	
	A Radius	Bolt Size
2 - 7.5	7-3/4	3/8 to 7/16
10 - 20	9-1/2	3/8 to 7/16
25 - 39	11-1/2	3/8 to 7/16

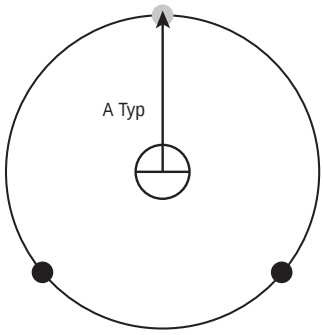

Figure 4

Universal Mounting Brackets (Standard)

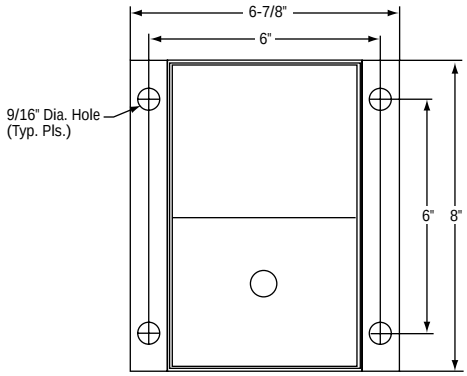

Figure 5

Mounting Optional Drip Shields (Model WHDS)

Optional stainless steel drip shields are available to mount to the top surface of the heater case on a horizontally mounted heater in locations where it may have dirty corrosive liquids dripping from overhead.

1. Mounting
   - **A.** Line up the four mounting holes on the shield with the four holes on the upper half of the heater case and fasten in place with the four stainless steel bolts, nuts and washers supplied with the kit. See figure 6.

Shield Identification

Heater Size	Shield Model
2 - 7.5 kW	WHDS-1
10 - 20 kW	WHDS-2
25 - 39 kW	WHDS-3

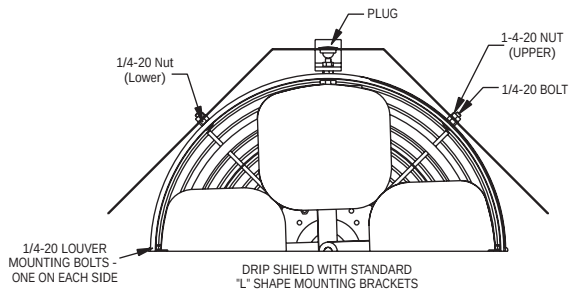

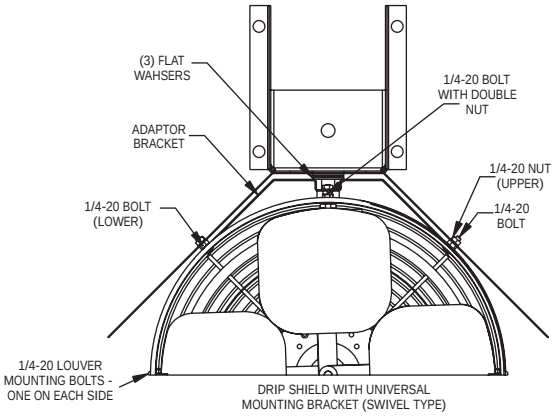

Figure 6

WIRING

Note: All electrical wiring must be done according to National Electrical and local codes by a qualified person.

⚠ WARNING

ELECTRIC SHOCK HAZARD. Any installation involving electric heaters must be performed by a qualified person and must be effectively grounded in accordance with the National Electrical Code to eliminate shock hazard.

1. Connect heater according to the voltage and frequency specified on the nameplate.
2. All units are provided with control and power terminal blocks for customer's connection.
3. Protection against overheating is provided by an internal automatic thermal cutout (manual reset cutout optional) which opens the electric circuit if the normal air-flow is restricted or stopped. Cutout automatically energizes heater on removal of the obstruction. If optional manual reset is tripped, determine cause before re-energizing.

⚠ WARNING

The system designer is responsible for the safety of this equipment and should install adequate back-up controls and safety devices with their electric heating equipment. Where the consequences of failure could result in personal injury or property damage, back-up controls are essential.

4. Heaters rated 5kW - 39kW are equipped with fan delay control. This control continues fan operation for a short time after elements are de-energized to dissipate residual heat.

Standard Equipment

- **Built-in Thermostat** (bulb and capillary type) for automatic temperature control. The thermostat controls the heating elements and fan simultaneously to achieve set temperature.

  The Lo setting of the thermostat is approximately 40˚F and the Hi setting is approximately 90˚F.

- **Heat-Cool switch** (heater on, heater off, fan only) to permit air flow with or without energizing the heating elements. The switch is accessible from outside the NEMA 4X enclosure.

- **A pilot light to indicate when heating elements are energized.**

Optional Equipment

- **Internal fusing**
- **Manual reset cutout**
- **Disconnect switch**
- **For wiring diagram containing options, see label on inside cover of terminal box**

WIRING DIAGRAMS

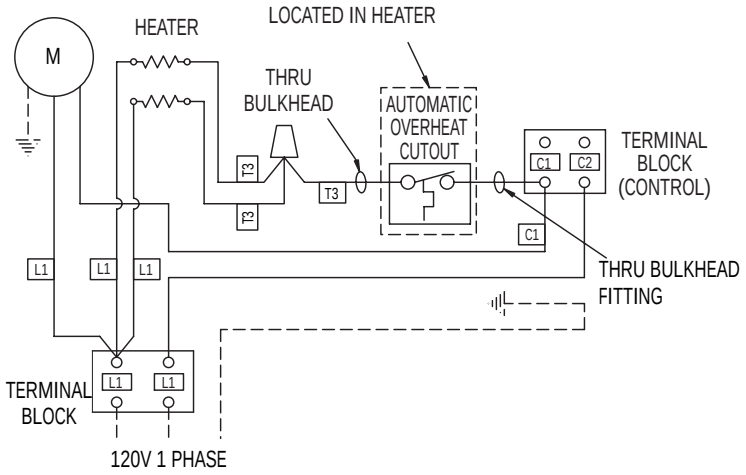

Figure 7 2, 3kw 120V 1Ø

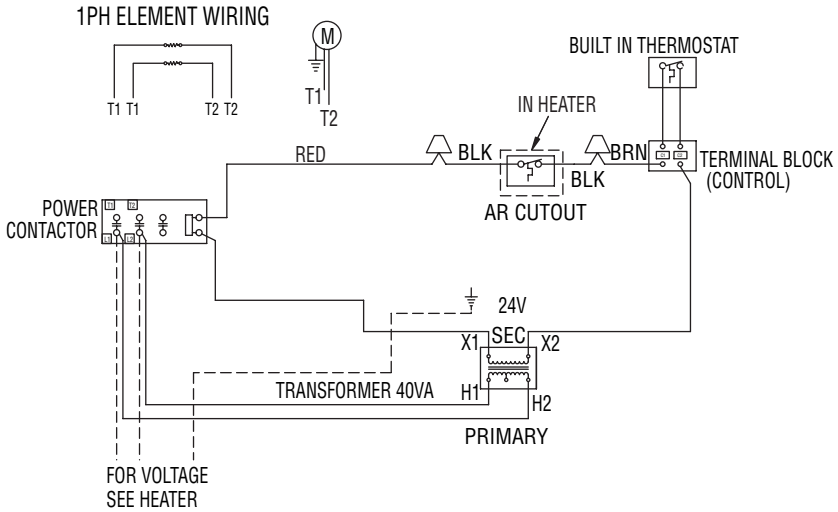

Figure 8 2, 3kw 208-277V 1Ø

WIRING DIAGRAMS (cont'd.)

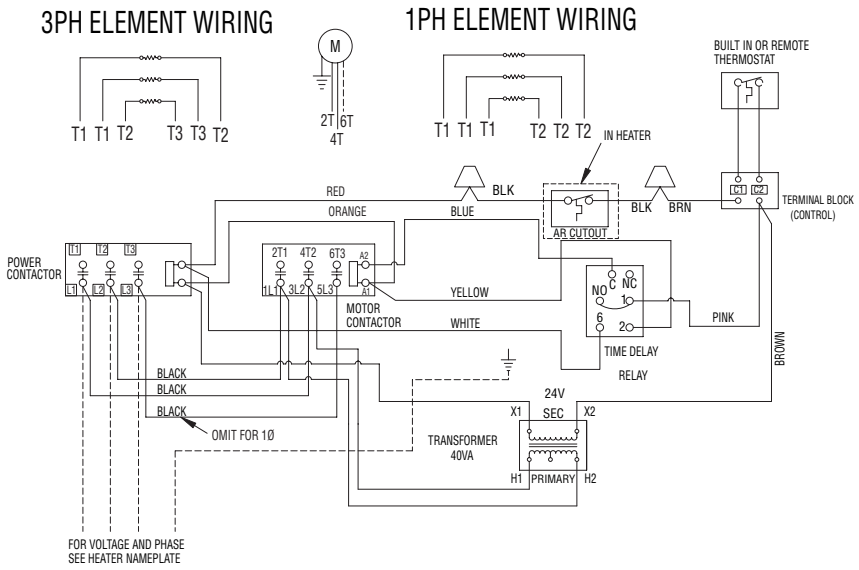

Figure 9 5kw to 39kw

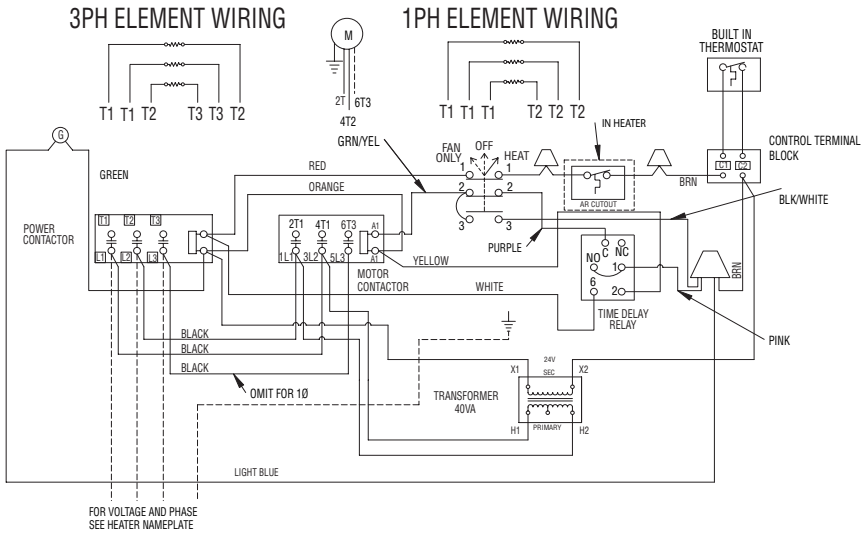

Figure 10 3kw to 39kw Typical Wiring Diagram with accessories – Three position switch.

OPERATION

With proper installation this heater will provide efficient and dependable service. Please read the following guidelines to ensure reliable operation.

1. Do not allow objects such as fabric or other combustible materials to restrict the airflow through the heater.
2. Heater should not be operated unattended unless adequate controls and safety devices have been installed.
3. The ambient operating temperature limits are -20˚F to 104˚F (-29˚C to 40˚C).

⚠ WARNING

FIRE HAZARD. To prevent personal injury or property damage, do not operate heater near combustible objects, restrict airflow or use for purposes other than described.

MAINTENANCE

⚠ WARNING

Turn off power to service heater. Do not attempt to service or clean heater while unit is operating as there is hazard of electric shock, injury from operating fan, and burns from hot heating elements.

ELECTRIC SHOCK HAZARD. Disconnect all power before installing or servicing heater. Failure to do so could result in personal injury or property damage.

1. Turn off heater and allow to cool before performing these maintenance procedures.
2. Fan motors in these heaters are provided with sealed ball bearings, factory lubricated, requiring no further lubrication under normal service conditions.
3. Vacuum or hose off heater with water (at city pressure) before activating for next heating season to remove accumulated dust or lint which otherwise may smoke or incinerate on initial heat up.

Note: Do not use high pressure cleaning systems.

RENEWAL PARTS IDENTIFICATION

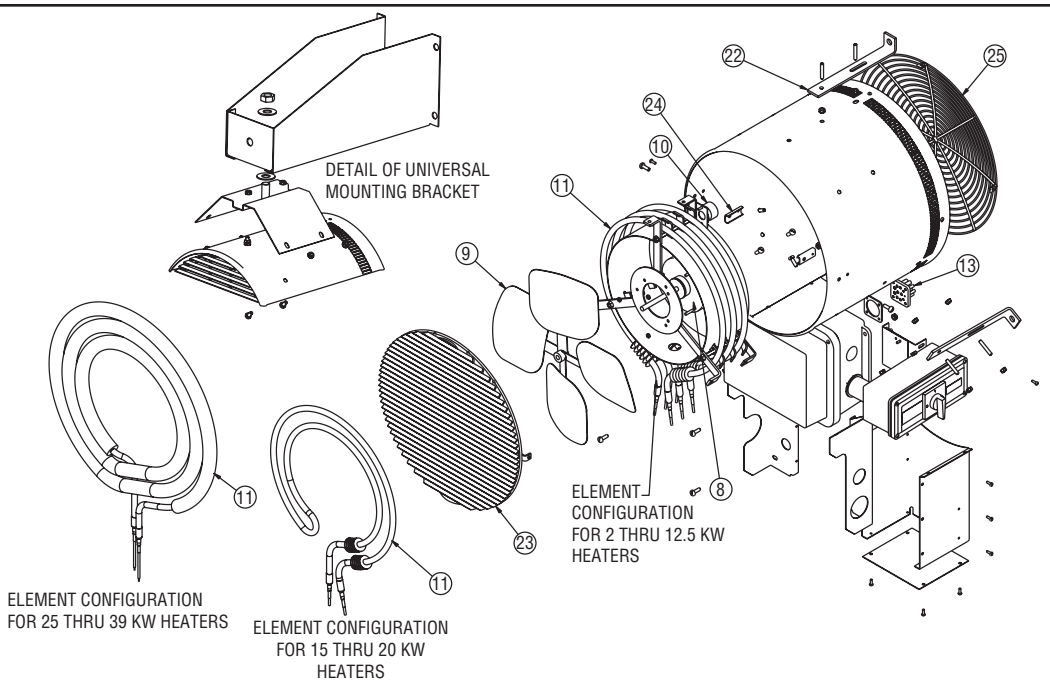

Figure 11

TERMINAL BOX COMPONENT LAYOUT

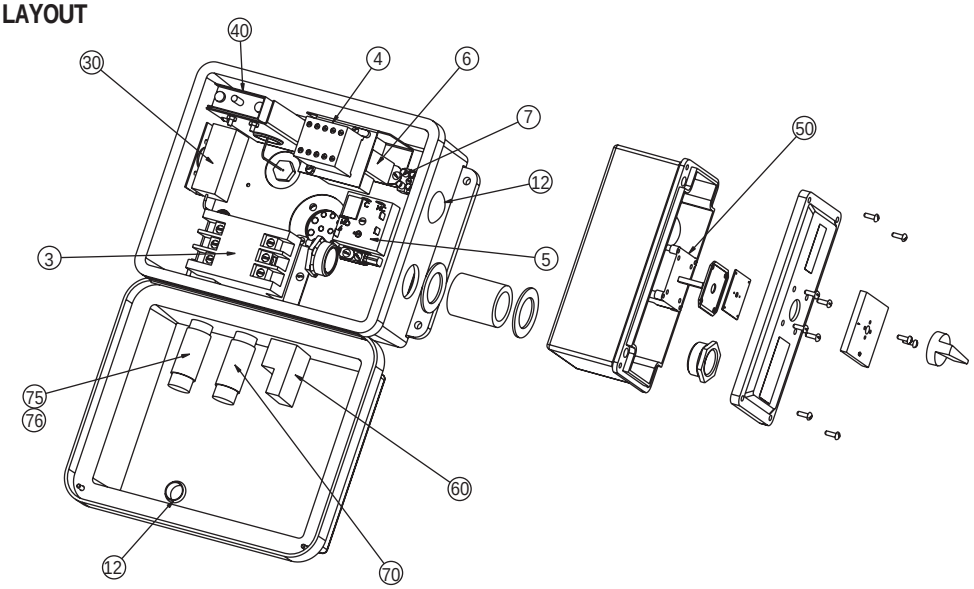

Figure 12

Elements (11)

Heater KW	120 Volt	208 Volt	240 Volt	277 Volt	480 Volt	575 Volt
2	118-305471-001	118-305471-002	118-305471-004	118-305471-005	Not Available	Not Available
3	118-305471-006	118-305471-007	118-305471-009	118-305471-010	Not Available	Not Available
5		118-305471-011	118-305471-013	118-305471-014	118-305471-019	Not Available
7.5		118-305471-020	118-305471-022	118-305471-023	118-305471-028	118-305471-024
10		118-305471-101	118-305471-103	118-305471-104	118-305471-109	118-305471-105
12.5		118-305471-110	118-305471-112	118-305471-113	118-305471-117	118-305471-118
15	Not Available	118-305471-201	118-305471-203		118-305471-207	118-305471-208
20			118-305471-209		118-305471-213	118-305471-214
25		Not Available		Not Available	118-305471-304	118-305471-305
30			Not Available		118-305471-309	118-305471-310
35					118-305471-311	118-305471-312
39					118-305471-313	118-305471-314

Notes: 1. All heaters have three (3) elements except for 2kw heaters which have two (2).
2. Specified voltages are heater voltages. See heater nameplate for heater voltage.

RENEWAL PARTS IDENTIFICATION

Mechanical Parts and Cutout – kW Dependent

Heater KW	Fan (9)	Cutout (10)	Fitting Kit (13)	Mounting Bracket (22)	Louver (23)	Louver Stop (24)	Grille (25)
2 and 3	112-027709-018	168-053169-105	168-053169-090	027-305488-001	182-047073-028	282-119082-005	134-027038-007
5	112-027709-018	168-053169-105		027-305488-001	182-047073-028		134-027038-007
7.5	112-027709-019	168-053169-105		027-305488-001	182-047073-028		134-027038-007
10 and 12.5	112-027709-021	168-053169-105		027-305488-001	182-047073-025		134-027038-008
15 and 20	112-027709-021	168-053169-105		027-305488-001	182-047073-025		134-027038-008
25, 30, 35 and 39	112-027568-003	168-053169-106		027-305488-002	182-047073-035		134-027038-005

Notes: 1. See heater nameplate for heater kW
2. Fitting kit (13) includes fitting, gasket, screws and heat shrink tubing.
3. Cutout Kit (10) includes cutout, heat shrink and hardware.

Electrical Parts

Heater kW	Heater Line Voltage	Heater Control Voltage	Htr Phase	Contactor (3)	Motor Relay (4)	Time Delay Relay (5)	Transformer (6)	Terminal Block (7)	Motor (8)	Plug (12)
2 & 3	120	120	1	Not Used	Not Used	Not Used	Not Used	303-302177-010		221-300463-002
2 & 3	208-240	120	1	072-304551-008	Not Used	Not Used	315-304252-001			
2 & 3	277	120	1		Not Used	Not Used	315-304252-003		168-053169-091	
5, 7.5, 10, 12.5, 15 & 20	208-240	120	1 or 3		072-123534-064	072-071847-038	315-305252-001			
5, 7.5, 10, 12.5, 15 & 20	277	120	1				315-304252-003			
5, 7.5, 10, 12.5, 15 & 20	480	120	1 or 3				315-304252-001		168-053169-092	
5, 7.5, 10, 12.5, 15 & 20	575	120	1 or 3				315-304252-003		168-053169-093	
25, 30, 35 & 39	480	120	3				315-304252-001		168-053169-094	
25, 30, 35 & 39	575	120	3				315-304252-003		168-053169-095	
2 & 3	208-240	24	1	072-304551-002	Not Used	Not Used	315-304252-002			
2 & 3	277	24	1		Not Used	Not Used	315-304252-004		168-053169-091	
5, 7.5, 10, 12.5, 15 & 20	208-240	24	1 or 3		072-123534-075	072-071847-039	315-305252-002			
5, 7.5, 10, 12.5, 15 & 20	277	24	1				315-304252-004			
5, 7.5, 10, 12.5, 15 & 20	480	24	1 or 3				315-304252-002		168-053169-092	
5, 7.5, 10, 12.5, 15 & 20	575	24	1 or 3				315-304252-005		168-053169-093	
25, 30, 35, & 39	480	24	3				315-304252-002		168-053169-094	
25, 30, 35, & 39	575	24	3				315-304252-005		168-053169-095	

Heater kW	Heater Line Voltage	Heater Control Voltage	Htr Phase	Thermostat (30)	Man. Reset Cutout (40)	Disconnect Switch (50)	3 Position Switch (60)	Pilot Light GREEN (70)	Pilot Light AMBER (75)	Pilot Light RED (76)
2 & 3	120	120	1	168-053169-096 40-90°F	168-053169-097	168-053169-098	292-304687-007	213-304688-007 (LED Replacement Lamp Per 213-304688-012)	213-304688-008 (LED Replacement Lamp Per 213-304688-014)	213-304688-002 (LED Replacement Lamp Per 213-304688-005)
2 & 3	208-240	120	1							
2 & 3	277	120	1							
5, 7.5, 10, 12.5, 15 & 20	208-240	120	1 or 3							
5, 7.5, 10, 12.5, 15 & 20	277	120	1							
5, 7.5, 10, 12.5, 15 & 20	480	120	1 or 3							
5, 7.5, 10, 12.5, 15 & 20	575	120	1 or 3							
25, 30, 35 & 39	480	120	3							
25, 30, 35 & 39	575	120	3							
2 & 3	208-240	24	1					213-304688-009 (LED Replacement Lamp Per 213-304688-011)	213-304688-010 (LED Replacement Lamp Per 213-304688-013)	213-304688-001 (LED Replacement Lamp Per 213-304688-004)
2 & 3	277	24	1							
5, 7.5, 10, 12.5, 15 & 20	208-240	24	1 or 3							
5, 7.5, 10, 12.5, 15 & 20	277	24	1							
5, 7.5, 10, 12.5, 15 & 20	480	24	1 or 3							
5, 7.5, 10, 12.5, 15 & 20	575	24	1 or 3							
25, 30, 35, & 39	480	24	3							
25, 30, 35, & 39	575	24	3							

Notes: 1. See heater nameplate for heater kw, line voltage, control voltage and phase.
2. Thermostat includes compression fitting, knob, indicator label, seal, bulb strap and mounting hardware.
3. Manual reset includes compression fitting, bulb mounting bracket and mounting hardware.
4. Disconnect switch includes handle, face plate, gasket and mounting hardware.

LIMITED WARRANTY

All products manufactured by Marley Engineered Products are warranted against defects in workmanship and materials for one year from date of installation. This warranty does not apply to damage from accident, misuse, or alteration; nor where the connected voltage is more than 5% above the nameplate voltage; nor to equipment improperly installed or wired or maintained in violation of the product's installation instructions. All claims for warranty work must be accompanied by proof of the date of installation.

The customer shall be responsible for all costs incurred in the removal or reinstallation of products, including labor costs, and shipping costs incurred to return products to Marley Engineered Products Service Center. Within the limitations of this warranty, inoperative units should be returned to the nearest Marley authorized service center or the Marley Engineered Products Service Center, and we will repair or replace, at our option, at no charge to you with return freight paid by Marley. It is agreed that such repair or replacement is the exclusive remedy available from Marley Engineered Products.

THE ABOVE WARRANTIES ARE IN LIEU OF ALL OTHER WARRANTIES EXPRESSED OR IMPLIED, AND ALL IMPLIED WARRANTIES OF MERCHANTABILITY AND FITNESS FOR A PARTICULAR PURPOSE WHICH EXCEED THE AFORESAID EXPRESSED WARRANTIES ARE HEREBY DISCLAIMED AND EXCLUDED FROM THIS AGREEMENT. MARLEY ENGINEERED PRODUCTS SHALL NOT BE LIABLE FOR CONSEQUENTIAL DAMAGES ARISING WITH RESPECT TO THE PRODUCT, WHETHER BASED UPON NEGLIGENCE, TORT, STRICT LIABILITY, OR CONTRACT.

Some states do not allow the exclusion or limitation of incidental or consequential damages, so the above exclusion or limitation may not apply to you. This warranty gives you specific legal rights, and you may also have other rights which vary from state to state.

For the address of your nearest authorized service center, contact Marley Engineered Products in Bennettsville, SC, at 1-800-642-4328. Merchandise returned to the factory must be accompanied by a return authorization and service identification tag, both available from Marley Engineered Products. When requesting return authorization, include all catalog numbers shown on the products.

HOW TO ORDER REPAIR PARTS

In order to obtain any needed repair or replacement parts, warranty service or technical information, please contact Marley Engineered Products Service Center toll-free by calling 1-800-642-HEAT.

Marley
Engineered Products

470 Beauty Spot Rd. East
Bennettsville, SC 29512 USA

ECR 36653

Part No. 5200-2473-001 10-05