Marley
Engineered Products



DH Series
Portable Industrial Unit
Blower Air Heaters

Installation & Maintenance Instructions

Dear Owner,

Congratulations! Thank you for purchasing this new heater by Marley Engineered Products. You have made a wise investment selecting the highest quality product in the heating industry. Please carefully read the installation and maintenance instructions shown in this manual. You should enjoy years of efficient heating comfort with this product from Marley Engineered Products... the industry's leader in design, manufacturing, quality and service.

... The Employees of Marley Engineered Products

WARNING

When using electrical appliances, basic precautions should always be followed to reduce the risk of fire, electric shock and injury to persons, including the following:

1. Read all instructions before using this heater.
2. This heater is hot when in use. To avoid burns, do not let bare skin touch hot surfaces. If provided, use handles when moving this heater. Keep combustible materials, such as furniture, pillows, bedding, papers, clothes, and curtains at least 3 feet (0.9 m) from the front of the heater and keep them away from the sides and rear.
3. Extreme caution is necessary when any heater is used by or near children or handicapped individuals and whenever the heater is left operating and unattended.
4. Always disconnect heater when not in use.
5. Do not operate any heater with a damaged cord or plug or after the heater malfunctions, has been dropped or damaged in any manner. Return heater to authorized service facility for examination, electrical or mechanical adjustments, or repair.
6. Do not use outdoors.
7. This heater is not intended for use in bathrooms, laundry areas and similar indoor locations. Never locate heater where it may fall into a bathtub or other water container.
8. Do not run cord under carpeting. Do not cover cord with throw rugs, runners or the like. Arrange cord away from traffic area and where it will not be tripped over.
9. To disconnect heater, turn thermostat off, then remove plug from outlet.
10. Connect to properly grounded outlets only.
11. Do not insert or allow foreign objects to enter any ventilation or exhaust opening as this may cause an electric shock, fire or damage the heater.
12. To prevent a possible fire, do not block air intakes or exhaust in any manner. Do not use on soft surfaces, like a bed, where opening may become blocked.
13. A heater has hot and arcing or sparking parts inside.Do not use it in areas where gasoline, paint or flammable liquids are used or stored.
14. Use this heater only as described in this manual. Any other use not recommended by the manufacturer may cause fire, electric shock or injury to persons.
15. This heater is not intended for use with an extension cord.
16. Save these instructions.

SAVE THESE INSTRUCTIONS

WARNING

Risk of fire. Do not use as a residential or household heater.

WARNING

Hazard of Fire or Discoloration of Temperature Sensitive Fabrics. Do not use as a residential or household heater. Keep combustible material and such fabrics away from heater. Do not operate heater where flammable vapors, gases or liquids are present. Heaters in the heat mode should not be operated in room temperatures above 80°F. Fan motor is not designed to operate in ambients below -40°F.

To avoid personal injury read "IMPORTANT INSTRUCTIONS" before installation or operation of heater.

WARNING

Keep electrical cords and combustible materials, such as drapes and other furnishings, away from heater.

Plug Specifications

Fits Cable Dia.	Plug Type	Model	Description	Volts	Amps	Configuration	NEMA #	ANSI #
.385"-.780"	Locking	LPS25124	3 Pole, 4 Wire	250	20		L15-20	C73.85
.385"-.780"	Locking	LPS25103	3 Pole, 4 Wire	250	30		L15-30	C73.86
.595"-1.150"	Locking	LPS25104	3 Pole, 4 Wire	480	30		L16-30	C73.88
.595"-1.150"	Locking	LPS25084	3 Pole, 4 Wire	600	30		L17-30	C73.89
.750"-1.125"	Locking	LPS25083	2 Pole, 4 Wire	600	50		—	—
.750"-1.125"	Locking	LPS25064	3 Pole, 4 Wire	600	50		—	—
.625"-1.187"	Non Locking	NPS25650	2 Pole, 3 Wire	250	50		6-50	C73.53
.390"-.775"	Non Locking	NPS1520	3 Pole, 4 Wire	250	20		15-20	C73.59
.750"-1.250"	Non Locking	NPS1550	3 Pole, 4 Wire	250	50		15-50	C73.61

ASSEMBLY INSTRUCTIONS

The DH is shipped fully assembled. The handle is assembled in the lower position (dotted line Fig. 1). To position handle in the upright position, remove bolts securing the handle to the support legs, lift handle until the handle holes line up with the upper holes in the support legs and insert bolts to secure the handle in the full upright position.

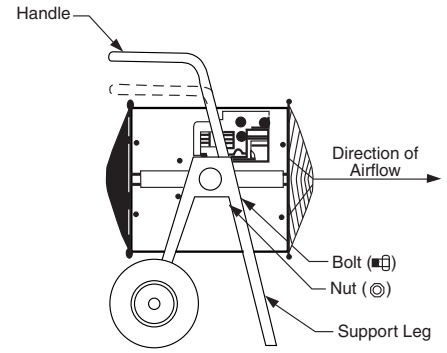

Figure 1

WARNING

ELECTRIC SHOCK HAZARD. Disconnect all power before installing or servicing heater. Failure to do so could result in personal injury or property damage. Heater must be effectively grounded in accordance with the National Electrical Code, NFPA 70.v

WIRING INSTRUCTIONS

1. Use heater only on the voltage and frequency specified on the nameplate.
2. All wiring should be done in accordance with local codes and the National Electrical Code by a qualified person.
3. Branch circuit wire for connection to heater must be at least 90°C wire.
4. The top access panel is secured by 4 screws that must be loosened to gain access.
5. A ground terminal is provided near the power terminal board. The ground wire should be connected before other connections are made.
6. Refer to Chart A for proper size "SO" grade cable.
7. A proper strain relief must be used with "SO" grade cable.
8. Dragon heaters are factory pre-wired for 3-phase delta operation. Some units can be converted to single phase operation by changing the wiring. Refer to Chart A for those heaters that can be converted to single phase. The appropriate wiring diagram is also located on the back of the wiring compartment cover.

Chart A

MODEL NUMBER	KW	VOLTS	BTUH	PH	AMPS	WIRING DIAGRAM NUMBER	SHIP WT.	WIRE SIZE	25 FT CORD SET	OPTIONAL PLUGS LOCKING TYPE	OPTIONAL PLUGS NON-LOCK TYPE
DH1021C*	10	240	34,120	1	41.7	N/A	65 lbs	N/A	Included*	-	Included
DH0783	7.5	208	25,590	1	36.3	1A	65 lbs	8/3	CS25083	-	NPS25650
				3	21	1		10/4	CS25104	LPS25103	NPS1550
DH1023	10	240	34,120	1	40.8	1A	65 lbs	6/3	CS25063	-	NPS25650
				3	23.6	1		10/4	CS25104	-	NPS1550
DH1583	15	208	51,180	3	41.8	1	65 lbs	6/4	CS25064	-	NPS1550
DH1523	15	240	51,180	3	36.3	1	65 lbs	8/4	CS25084	-	NPS1550
DH1521	15	240	51,180	1	62.5	1A	65 lbs	4/4	CS25044	-	NPS1550
DH1543	15	480	51,180	1	31.4/18.2	2A	65 lbs	8/3	CS25083	LPS25083	-
				3		2		12/4	CS25124	LPS25104	-
DH2043	20	480	68,240	1	41.6/24.4	4A	75 lbs	6/3	CS25063	LPS25083	-
				3		4		10/4	CS25104	LPS25084	-
DH3043	30	480	102,360	3	36.3	4	75 lbs	6/4	CS25064	LPS25064	
DH3063	30	600	102,360	3	29.1	4	75 lbs	8/4	CS25084	LPS25084	

*Model DH1021C is shipped with 10 ft. power cord and plug.
Note: All units are factory wired for 3 phase operation. Models designated 1 and 3 phase can be field wired for single phase operation.

Cord Preparation for Portable Heaters

1. Determine the gage and number of conductors fromChart A using amps and phase from the heater nameplate. It is not recommended that cord exceed 50 feet in length.
2. Strip off outer jacket of cord and insulation from lead wires. The tabulation below provides the strip dimensions for the various Chromalox portable heaters. See the nameplate on the heater for the Model number.
3. Slide fitting onto cord and tighten knurled nut to secure fitting to cord.
4. Select plug to match electrical rating of cord.
5. On opposite end of cord prepare end as directed by instructions that are provided with the plug.
6. Attach cord assembly to heater as shown in Fig. 2 below:

Model No.	A	B	C
All Models	8”	1”	0.5”

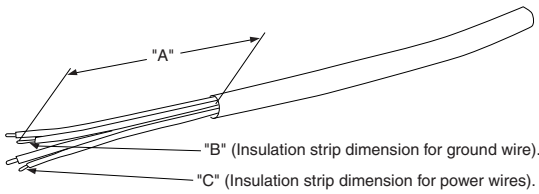

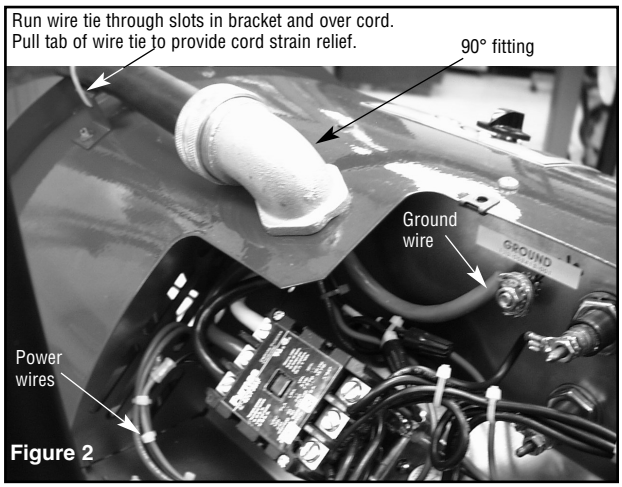

Figure 2

OPERATION INSTRUCTIONS

THERMOSTAT

Heaters include a bimetal thermostat for the automatic control of the exiting air temperature. The thermostat knob controls the heating elements and fan functions. The heater and fan are de-energized with the knob in the extreme clockwise position. Turning the knob clockwise from the off position to the fan position will energize the fan only, for use in summer cooling. The adjustment knob controls power to the heater and fan when turned further in the clockwise direction, with the highest temperature setting in the extreme clockwise position.

The temperature setting in the heater mode is approximately 40°F in the low setting and 100°F at the highest setting.

Note: The adjustment knob should be turned to the fan only setting after use for heating. The fan should be left on for at least 3 minutes to remove residual heat from the unit and to prevent overheating of the housing.

MAINTENANCE INSTRUCTIONS

⚠ WARNING ⚠

Electric Shock Hazard. Disconnect heater from power supply before servicing and/or inspecting the heater; failure to do so may result in electrical shock.

Replace or repair damaged cords or plugs immediately. Check tightness of all electrical connections prior to energizing the heater. Blow out or vacuum away any dirt or debries that may have accumulated around the control enclosure fan motor or heating elements.

Diag. 1 – FACTORY WIRED 3 PHASE

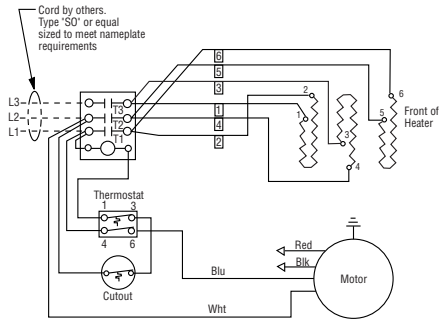

Diag. 1a – FIELD CONVERSION TO 1 PHASE

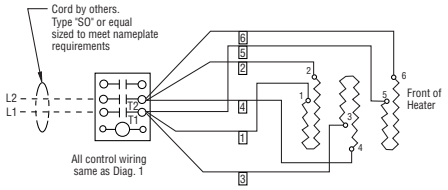

Instructions:
1. Loosen screws on load side of contactor. Remove all lead wire.
2. Insert lead wires numbers 1, 3, and 5 into box lug connector "T1". Tighten screws on box lug connector.
3. Insert lead wires numbers 2, 4, and 6 into box lug connector "T2". Tighten screws on box lug connector.
4. Examine wiring to make certain it is per above diagram.

Diag. 2 – FACTORY WIRED 3 PHASE

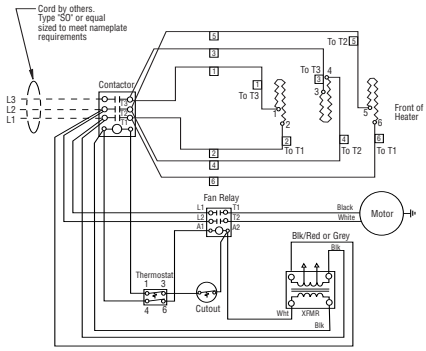

Diag. 2a – FIELD CONVERSION TO 1 PHASE

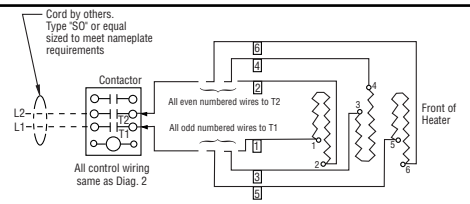

Instructions:
1. Loosen screws on load side of contactor. Remove all lead wire.
2. Insert lead wires numbers 1, 3, and 5 into box lug connector "T1". Tighten screws on box lug connector.
3. Insert lead wires numbers 2, 4, and 6 into box lug connector "T2". Tighten screws on box lug connector.
4. Examine wiring to make certain it is per above diagram.

Diag. 3 – FACTORY WIRED 3 PHASE

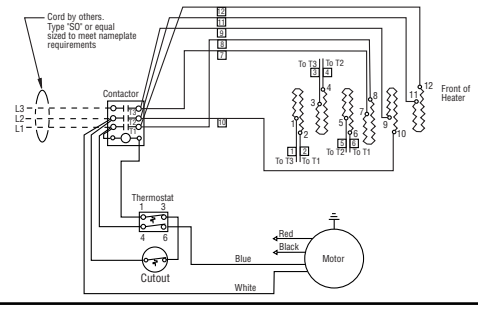

Diag. 4a – FIELD CONVERSION TO 1 PHASE

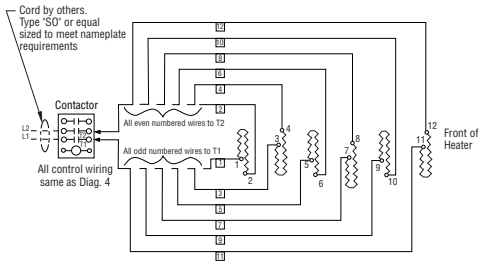

Instructions:
1. Loosen screws on load side of contactor. Remove all lead wire.
2. Insert lead wires numbers 1, 3, 5, 7, 9 and 11 into box lug connector "T1". Tighten screws on box lug connector.
3. Insert lead wires numbers 2, 4, 6, 8, 10 and 12 into box lug connector "T2". Tighten screws on box lug connector.
4. Examine wiring to make certain it is per above diagram.

Diag. 4 – FACTORY WIRED 3 PHASE

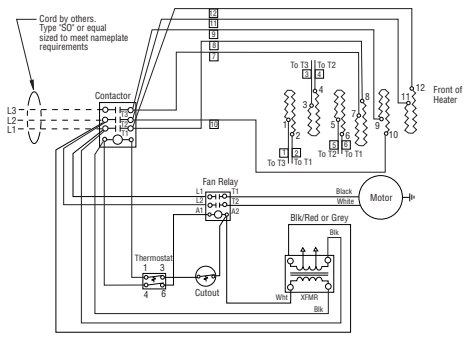

Renewal Parts Identification

MODEL NO.	VOLTS	KW	PHASE	ELEMENT PART NO.	MOTOR PART NO.	FAN PART NO.	CONTACTOR PART NO.	CONTROL TRANS/
DH0783	208	7.5	1 and 3	118-304793-001	193-302120-009	112-045422-007	072-304551-014	———
DH1023	240	9.75	1 and 3	118-304793-004			072-304551-014	———
DH1583	208	15	3	118-304793-007			072-304551-014	———
DH1523	240	15	3	118-304793-008			072-304551-014	———
DH1543	480	15	1 and 3	118-304793-009	193-302120-012		072-304551-008	315-304252-001
DRA-20-23	240	19.5	3	118-304793-004	193-302120-009		072-304551-014	———
DRA-20-43	480	20	1 and 3	118-304793-005	193-302120-012		072-304551-008	315-304252-001
DRA-30-43*	480	30	3	118-304793-011a	193-302120-012		072-304551-008	315-304252-001
				118-304793-013b				
DRA-30-93*	600	30	3	118-304793-012a	193-302120-015		072-304551-008	315-304252-003
				118-304793-014b				

PARTS COMMON TO ALL UNITS	
DESCRIPTION	PART NO.
Wheels	333-557518-004
Grille	134-304780-002
Thermostat	300-304782-001
Thermal Cut-out	300-048038-003
Fan Relay (not used on 208 and 240V Models)	072-123534-057

*30 kW units contain two sets of three elements (six total). The ratings of the three elements on the discharge end have a lower wattage than the elements on the fan end of heater. The ends of the elements are color coded, the lower wattage are color coded yellow and the higher wattage are color coded blue.

a. Lower wattage elements, discharge end, yellow coded

b. Higher wattage elements, fan end, blue coded

LIMITED WARRANTY

All products manufactured by Marley Engineered Products are warranted against defects in workmanship and materials for one year from date of installation, except heating elements which are warranted against defects in workmanship and materials for five years from date of installation. This warranty does not apply to damage from accident, misuse, or alteration; nor where the connected voltage is more than 5% above the nameplate voltage; nor to equipment improperly installed or wired or maintained in violation of the product's installation instructions. All claims for warranty work must be accompanied by proof of the date of installation.

The customer shall be responsible for all costs incurred in the removal or reinstallation of products, including labor costs, and shipping costs incurred to return products to Marley Engineered Products Service Center. Within the limitations of this warranty, inoperative units should be returned to the nearest Marley authorized service center or the Marley Engineered Products Service Center, and we will repair or replace, at our option, at no charge to you with return freight paid by Marley. It is agreed that such repair or replacement is the exclusive remedy available from Marley Engineered Products.

THE ABOVE WARRANTIES ARE IN LIEU OF ALL OTHER WARRANTIES EXPRESSED OR IMPLIED, AND ALL IMPLIED WARRANTIES OF MERCHANTABILITY AND FITNESS FOR A PARTICULAR PURPOSE WHICH EXCEED THE AFORESAID EXPRESSED WARRANTIES ARE HEREBY DISCLAIMED AND EXCLUDED FROM THIS AGREEMENT. MARLEY ENGINEERED PRODUCTS SHALL NOT BE LIABLE FOR CONSEQUENTIAL DAMAGES ARISING WITH RESPECT TO THE PRODUCT, WHETHER BASED UPON NEGLIGENCE, TORT, STRICT LIABILITY, OR CONTRACT.

Some states do not allow the exclusion or limitation of incidental or consequential damages, so the above exclusion or limitation may not apply to you. This warranty gives you specific legal rights, and you may also have other rights which vary from state to state.

For the address of your nearest authorized service center, contact Marley Engineered Products in Bennettsville, SC, at 1-800-642-4328. Merchandise returned to the factory must be accompanied by a return authorization and service identification tag, both available from Marley Engineered Products. When requesting return authorization, include all catalog numbers shown on the products.

HOW TO OBTAIN WARRANTY SERVICE AND WARRANTY PARTS PLUS GENERAL INFORMATION

1. Warranty Service or Parts **1-800-642-4328**
2. Purchase Replacement Parts **1-800-654-3545**
3. General Product Information **www.marleymep.com**

Note: When obtaining service always have the following:
1. Model number of the product
2. Date of manufacture
3. Part number or description

Marley Engineered Products

470 Beauty Spot Rd. East
Bennettsville, SC 29512 USA

PPD057A

5200-2653-001 06/08