LEADING EDGE®
A Marley Engineered Products Brand

PROJECT	*ENGINEER*	*CONTRACTOR*	*SHEET OF*
LOCATION	*ARCHITECT*	*DATE*	*DRAWING NO.*

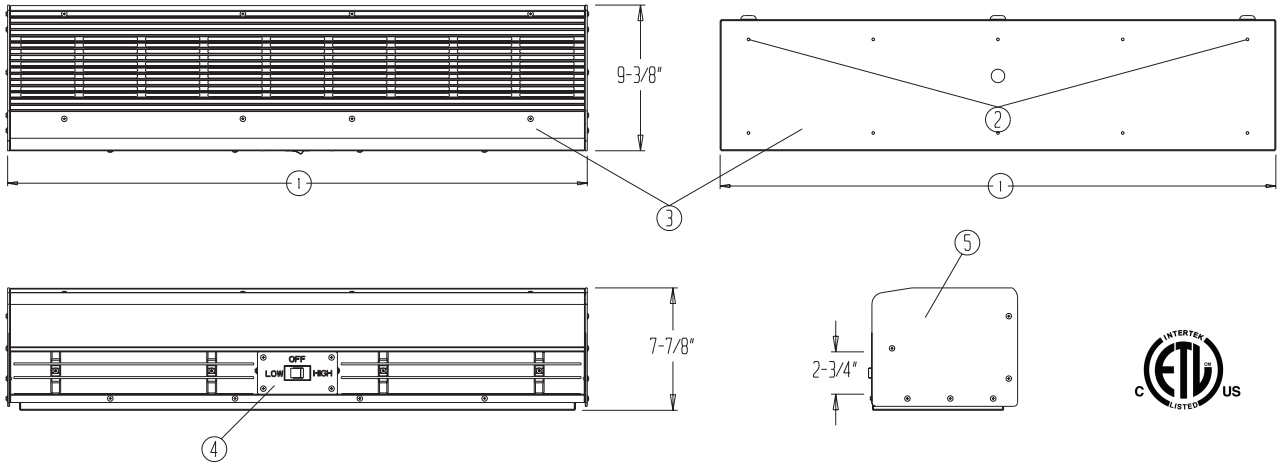

NOTES:

1. Refer to individual model number for unit width.
2. Quick-Mount mounting plat included. Mounting hardware and support structure to local code by others.
3. All metal, corrosion-resistant, powder coated gal vanized steel housing, intake grill, and mounting plate or stainless steel.
4. Two speed motor with convenient rocker switch.
5. Complete air curtain unit is ETL-listed.

MARK	QTY.	WIDTH	MODEL NUMBER	HP	MAX VELOCITY HI/LOW	AVG VELOCITY HI/LOW	AVG AIR FLOW HI/LOW	MAX AMPS		WT. LBS	REMARKS
								120V	220V		

SPECIFICATIONS:

Cabinet: Each unit shall consist of an all-metal, corrosion-resistant, galvanized steel housing with electrostatically-applied powder paint. Cabinet to have flush louvers and full-length discharge with two 1-inch directional vanes for maximum 40˚ sweep for optimum air flow adjustment. Cabinets shall be suited for continuous mounting and cabinet shall not exceed 9-3/8 inches in height. Grill shall be anodized aluminum of architectural design.

Fan and Motor Assembly: Motor shall be____HP, 120/220 volt, 50/60 cycle, fixed 2-speed with rocker-style hi/low selector switch. (Variable speed controls not acceptable.) Motors shall be double-shafted, resilient-mounted, and direct-drive. Ball bearings shall be permanently-lubricated, rubber-sealed. Blower wheels shall be cross-flow type for maximum outlet uniformity. Unit shall be furnished with 48-inch molded cord and plug assembly.

Complete Air Curtain Unit: Shall be ETL-listed. Sound level measured 10 feet from unit shall not exceed 60dbA. Mounting template and a comprehensive Operating Instructions and Parts Manual shall be furnished with every unit

LOW PROFILE ARCHITECTURAL SERIES MODELS