# AIR CIRCULATOR ASSEMBLY AND INSTALLATION INSTRUCTIONS

## *OSCILLATING AIR CIRCULATOR*

MODEL: LCHHD24-O AND LCHHD30-O

**READ INSTRUCTIONS CAREFULLY BEFORE ATTEMPTING TO ASSEMBLE, OPERATE OR MAINTAIN THE PRODUCT DESCRIBED. PROTECT YOURSELF AND OTHERS BY OBSERVING ALL SAFETY INFORMATION. FAILURE TO COMPLY WITH INSTRUCTIONS COULD RESULT IN PERSONAL INJURY AND/OR PROPERTY DAMAGE. RETAIN INSTRUCTIONS FOR FUTURE REFERENCE.**



**Specifications**

| | 24" | 30" |
|---|---|---|
| Volts | 120 | 120 |
| Hz | 60 | 60 |
| Amps | 3.1 | 3.3 |
| Horsepower | 1/4 | 1/4 |
| Max RPM | 1175 | 1100 |
| Shaft Diameter | 1/2" | 1/2" |
| Sweep | 90˚, or fixed | 90˚, or fixed |
| Tilt | 10˚ up or down | 10˚ up or down |

***Figure 1***

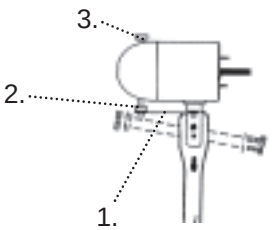


Your oscillating fan head is shipped completely assembled. This head assembly is for pedestal or wall mount applications only. Choose mount needed and follow installation instructions on back page.

**CAUTION: Do not install oscillating fans upside down as this may allow the fan to fall or become permanently damaged. Mount only as shown in this manual with the fan head on top of the bracket.**

***General Safety Information***

1. Before servicing or cleaning unit, switch power off at service panel and lock service panel to prevent power from being switched on accidentally.
2. Installation work and electrical wiring must be done by qualified person(s) in accordance with all applicable codes and standards, including fire-rated construction.
3. When cutting or drilling into wall or ceiling, do not damage electrical wiring or other hidden utilities.
4. Ensure that the power source conforms to the electrical requirements of the motor.
5. To reduce the risk of fire or electric shock, do not use this fan with any solid state motor speed control.
6. Never allow fan to become wet or damp.
7. Never move or adjust fan height while fan is running.
8. Never put fingers or foreign objects through fan guard.
9. Check all hardware periodically to make sure all is secure. Loose hardware could cause damage to fan.
10. A secondary support cable should be used with any overhead installation.

**WARNING: USE OF A THREE-PRONG TO TWO PRONG ADAPTER IS NOT RECOMMENDED. IMPROPER CONNECTION MAY CREATE THE RISK OF ELECTROCUTION. USE OF SUCH ADAPTER IS PROHIBITED IN CANADA.**

11. Extension cords should not be used with fans. If it is necessary, use only three wire extension cords with three prong grounded type plugs. Refer to table for correct wire size.

| **EXTENSION CORD LENGTH** | **WIRE SIZE AWG** |
|---|---|
| UP TO 25 FEET | 14 |
| 25-50 FEET | 12 |

**WARNING: DO NOT DEPEND UPON ANY SWITCH OR THERMOSTAT AS THE SOLE MEANS OF DISCONNECTING POWER WHEN INSTALLING OR SERVICING THE MOTOR. ALWAYS UNPLUG THE POWER CORD. FAILURE TO DO SO MAY RESULT IN FATAL ELECTRIC SHOCK.**

**CAUTION: DO NOT MOVE FAN WHILE BLADE IS MOVING. ALWAYS TURN FAN OFF AND LET BLADE STOP BEFORE ATTEMPTING TO MOVE. DO NOT USE BLADE GUARD TO MOVE FAN.**

***Operation***

1. Motor is set for 90˚ sweep when assembled at factory. Make sure both bolts on actuating arm are tight. See Figure 1. Be sure that lockshaft (3) in Figure 1 is securely tightened full counter clockwise to obtain the "sweep" action. Tighten lockshaft only when blade or motor is at rest. The lockshaft may be hand tightened or a pair of pliers may be used to snug the lockshaft.
2. "Straight blow" (fixed position) is obtained by loosening the lockshaft(3) approximately 1/4 turn clockwise.
3. The lockshaft will loosen and disengage the oscillating mechanism when the fan assembly is blocked or prevented from making its full sweep. Remove the blockage and re-tighten the lockshaft to return to its sweeping action.
4. Fan may be tilted 10˚ up or 10˚ down on both pedestal & wall mount application.
5. Do not tighten set screw on support . This is pre-set at factory.

***Maintenance***

**WARNING: MAKE CERTAIN THAT THE FAN IS UNPLUGGED BEFORE ATTEMPTING TO SERVICE, DISASSEMBLE OR REMOVE ANY COMPONENT!**

1. Clean blade and guard with mild soap and water only. DO NOT allow fan motor to get wet.
2. Motor is permanently lubricated - do not oil.
3. Inspect for any damaged or worn parts and replace.

NOTE: Fan motor switch and capacitor are field serviceable. Oscillating gear box inside is NOT field serviceable. Gear box must be removed and sent to the factory for repair or replacement.

# ADJUSTABLE PEDESTAL COLUMN FOR OSCILLATING FAN

**IMPORTANT- REVIEW ALL THE ASSEMBLY INSTRUCTIONS AND CHECK FOR MISSING OR DAMAGED PARTS PRIOR TO STARTING ASSEMBLY**

1. Remove 2 sections of adjustable pedestal column from carton. Remove oval grommet from parts package and install in oval slot near top of pedestal column. Remove large round grommet from parts package. Turn grommet "inside out" so that the grove is on the inside and the smooth side is on the outside. Install grommet over bottom lip of pedestal column. Feed power cord down through top of black section (end with screw holes). Slide adjustment collar into black section, align screw holes and secure. Secure adjustment collar to lowest height for assembly. (See Figure 2)
2. Remove base from carton and insert medium rubber grommet into hole on surface of fan base.(See Figure 3)
3. Feed power cord from bottom of column down through center hole of fan base and then back through hole with rubber grommet.(See Figure 3)
4. Align holes in flange at base of column with holes in top of fan base. Secure using 5/16" x 1" carriage bolts, lockwashers and hex nuts.(See Figure 3). One of the carriage bolts is to be attached with the 5/16" internal tooth star washer mounted under the bolt head.
5. Secure fan head assembly to upper column using 1/2" x 1-1/2" hex bolt, washer, lockwashers and hex nuts,1/4" x 1-1/2" bolt, washer, lockwashers and hex nut. (See Figure 4).

**NOTE:** Loosen the lockshaft (3) Figure 1, at least 1/4 turn clockwise to disengage the oscillating mechanism of the gear before installing the fan head assembly to the pedestal column. This will avoid unnecessary movements of the gear mechanism while the fan head is still being installed.

6. Loosen adjustment collar and extend fan to proper height.Tighten collar and connect power cord from column to power cord on motor.
7. Plug power cord from fan into any 120 VAC 3-prong grounded outlet.

---

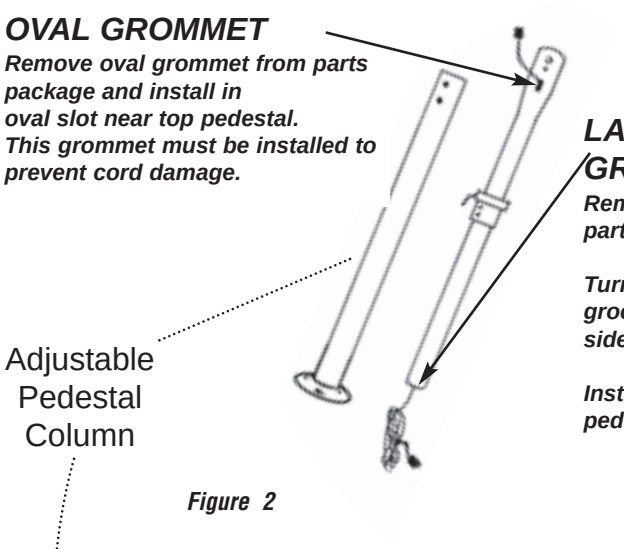


*Figure 2*

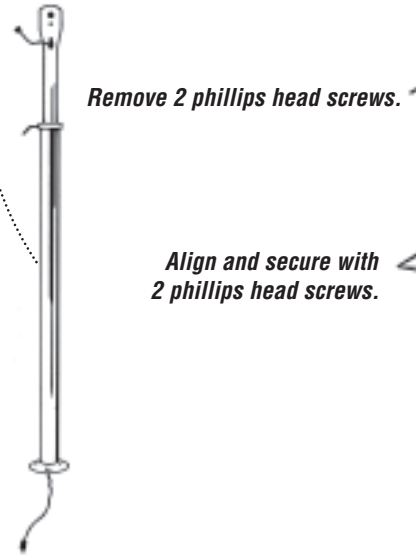


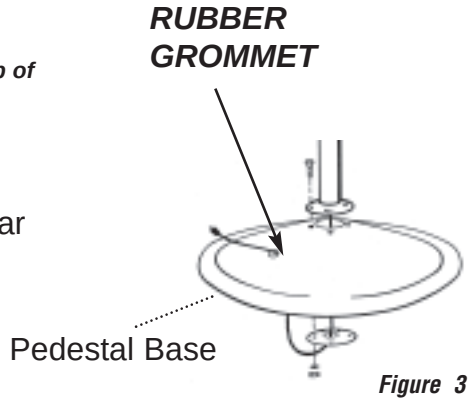


*Figure 3*

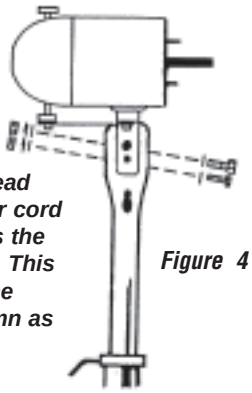

*NOTE: When mounting Fan Head onto pedestal assembly, motor cord should be on the same side as the oval grommet on the pedestal. This will minimize the rubbing of the flexcord on the pedestal column as the motor oscillates.*

*Figure 4*

# *WALL MOUNT FOR OSCILLATING FAN*

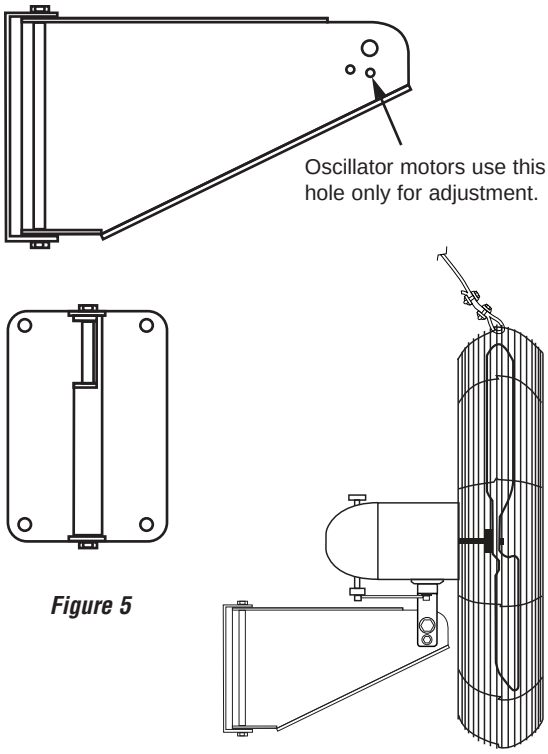


***Figure 5***

**CAUTION: Do not install oscillating fans upside down as this may allow the fan to fall or become permanently damaged. Mount only as shown in this manual with the fan head on top of the bracket.**

1. Securely mount the wall bracket directly to a cinder block wall or vertical I-beam. Drill four 25/64" diameter holes in the proper locations on the mounting surface, using the wall bracket as a template. 3/8-16 hex bolts are recommended for use in mounting the bracket to the mounting surface. The bolts should be of sufficient length for the particular surface to which the bracket is to be mounted. Also, if mounting to a cinder block wall, large surface bearing washers are recommended on the opposite side of the block to ensure the nut has sufficient surface to be tightened. For installation on wood construction (minimum 2" x 4" stud), secure bracket with heavy duty lag bolts or screws (not included). For concrete or masonry installation use heavy duty expansion shields and lag screws (not included). See Figure 5

NOTE: All installation should be done to meet local building codes.

2. Mount the motor assembly to the wall bracket using 1/2" x 1-1/2" hex bolt and 1/4" x 1-1/2" bolt, washers, lockwashers and hex nuts provided. See Figure 6

3. When mounting oscillating motor and fan assemblies, use only the 1/4" adjustment hole directly below the 1/2" mounting hole on wall mount bracket. See Figure 5.

**NOTE:** Use of the wrong hole on the wall bracket will cause the oscillating models to tilt too much and will cause the oscillating mechanism to bind and cause premature failure.

4. DO NOT use an extension cord. For units which feature two part cordsets, connect the male end of the motor cord to the female end of the cordset. Plug power cord from fan into any 120 VAC 3 prong, grounded outlet.

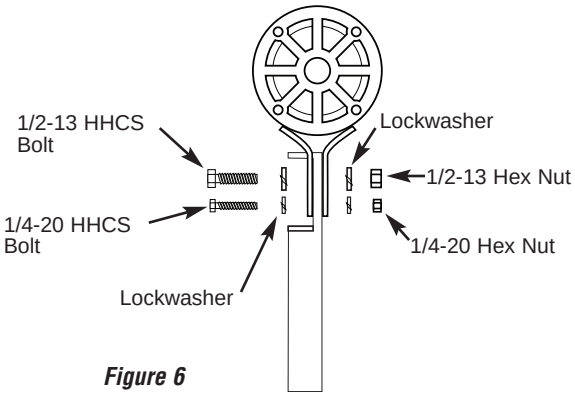


***Figure 6***

SECONDARY SUPPORT CABLE INSTALLATION
For Overhead Wall Mounted Application

Loop secondary support cable around top of fan guard as indicated. Secure cable making sure both front and back guards are inside loop but cable is not allowed to touch fan blade (See Figure 5). Secure ends with two cable clamps, loop other end of cable around any permanent sturdy structural member close to fan (rafter, I-beam, joist, etc.) and secure ends with two cable clamps. Give enough slack such that fan will be able to make its full sweep without the support cable restraining its sweeping action.

**IMPORTANT NOTICE:** It is important to note the proper installation position of the cable clamps as illustrated. To obtain maximum holding power, install U-bolt section of clip on dead or short end of cable and saddle on long end of cable (See Figure 7). Improper installation reduces the efficiency of the connection by as much as 40 percent.



***Figure 7***

# *REPLACEMENT PARTS FOR LCHHD24-O AND LCHHD30-O*

Items that may need replacing
because of loss or damage.

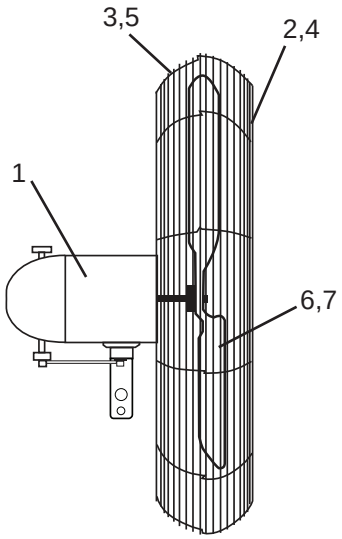


(For Pedestal Mount
Application Only)

| Ref. No. | Description | Part No. |
|---|---|---|
| 1 | Motor Only-Oscillating | 3900-2057-000 |
| 2 | Guard 24” Front | 2504-2040-002 |
| 3 | Guard 24” Rear | 2504-2039-002 |
| 4 | Guard 30” Front | 2504-2038-002 |
| 5 | Guard 30” Rear | 2504-2037-002 |
| 6 | Blade 24” | 1210-2014-000 |
| 7 | Blade 30” | 1210-2026-000 |

**HOW TO OBTAIN WARRANTY SERVICE AND WARRANTY PARTS PLUS GENERAL INFORMATION**

1. Warranty Service or Parts **1-800-642-4328**
2. Purchase Replacement Parts **1-800-654-3545**
3. General Product Information **www.marleymep.com**

**Note:** When obtaining service always have the following:
1. Model number of the product
2. Date of manufacture
3. Part number or description

Marley Engineered Products
470 Beauty Spot Rd. East
Bennettsville, SC 29512 USA

Part No. 5200-2392-003

ECR 37011
02/07