LEADING EDGE®
A Marley Engineered Products Brand

High Velocity Series Steam and Hot Water Heated Air Curtains

PROJECT	*ENGINEER*	*CONTRACTOR*	*SHEET OF*
LOCATION	*ARCHITECT*	*DATE*	*DRAWING NO.*

				MOTOR / FAN SPECIFICATIONS						HEATING CAPACITY OF COILS								
										STEAM (2)				HOT WATER (2)				
										CAPACITY (MBH)		TEMP RISE DEG. F		CAPACITY (MBH)		TEMP RISE DEG. F		
MARK	QTY.	WIDTH (IN)	MODEL NUMBER (1)	MOTOR HP	VOLTS & PHASE	NO. OF MOTORS	AMPS	MAX FPM @ NOZZLE	MAX CFM @ NOZZLE	ONE ROW	TWO ROW	ONE ROW	TWO ROW	ONE ROW	TWO ROW	ONE ROW	TWO ROW	WT. LBS

NOTE: (1) When specifying one row design use "HS1 " suffix for steam and "HW1" for hot water.
For two row design use "HS2" for steam and "HW2" for hot water.
(2) MBH and air temperature rise based 70 deg. F ambient air and (5 psi steam) or (200 deg. F hot water).

GENERAL: Air curtain shall be Leading Edge brand Environmental Series Models.

APPROVALS: Air curtains, excluding coils, shall be cULus or cETLus listed and meet the requirements of the National Electric Code.

CABINET: Unit shall be all-metal, corrosion resistant , galvanized steel housing double protected with bake on rust preventative electrostatic applied epoxy powder coating. The maximum effective width per motor blower assembly shall be no more then 48" and all cabinets shall have structural sidewall supports a maximum 48" apart. Units to have full-length discharge and flush louvers with 1-inch directional vanes for maximum 40 deg. sweep for optimum airflow adjustment. Cabinet grille shall allow for no tools access to motor/blower assembly . Electrical junction box shall be mounted on upper right end of unit unless otherwise specified.

COIL CONSTRUCTION (HOT WATER AND STEAM): Coils shall be of universal construction design for both low-pressure steam and hot water applications manufactured by HEATCRAFT. Primary surface coils shall be constructed of 5/8" OD seamless copper tubing on 1-1/4" centers with .035" wall thickness. Secondary surface shall be die formed rippled corrugated aluminum plate type fins. Fin collars shall be fully drawn to assure uniform pressure bond to the coils for maximum heat transfer and to accurately control fin spacing the entire length of the coils. Casing shall be die-formed heavy gauge galvanized steel with reinforced mounting flanges. Oversize tube holes shall allow for float in casing coil. Intermediate supports shall be provided on units exceeding 60". Headers shall be extra heavy duty seamless copper tubing. Header end caps shall be heavy gauge die formed copper. All joints to be brazed with high temperature copper alloys. Fittings shall be of wrought copper or similar construction so that the entire fluid circuit shall be of compatible non-ferrous materials. Manifold shall be fitted with 1/4" vent or drain fittings. Supply connections are to be universal design for right or left hand applications. Coils are to be individually crated and not assembled to air curtain.

MOTOR: Motors shall be heavy duty, totally enclosed, permanent split capacitor with double extended shafts. Each motor shall be resilient mounted and furnished with an automatic resetting thermal overload protector and permanently lubricated rubber-sealed ball bearings. Single phase motors shall be two speed. Internal motor power cord shall have quick-disconnect plugs for easy removal of blower assembly for cleaning and maintenance.

BLOWER ASSEMBLY: Blower wheels and scrolls shall be all metal, corrosion resistant galvanized steel. Blower wheels shall be forward curved vanes, directly driven, double-inlet squirrel cage design. The maximum effective width of any individual motor/blower assembly shall not exceed 48 inches.

MOUNTING: Each unit shall be constructed with keyholes on the rear of each cabinet for flush wall mounting and supplied with mounting template, Operating Instructions and Parts Manual.

OPTIONAL ACCESSORIES:

- ☐ **Instant On/Off Accessories:**
  - ☐ Automatic Door Switches- for instant activation upon door opening.
  - ☐ Control Panel- for three phase air curtains requiring Automatic Door Switches.
- ☐ **Mounting Hardware:**
  - ☐ Light duty wall bracket- for wall mounting of unit from top of cabinet.
  - ☐ Medium duty wall bracket- for mounting of unit 12" from wall.
  - ☐ Smart-Trac II Adjustable Mounting System- for suspension mount installation.
- ☐ **Grilles:** Anodized aluminum architectural grille.
- ☐ **Filters:** Washable aluminum mesh.
- ☐ **Tamper-Resistant Kits:** Prevents unauthorized access to motor/blower assembly.

HIGH VELOCITY SERIES STEAM AND HOT WATER HEATED MODELS

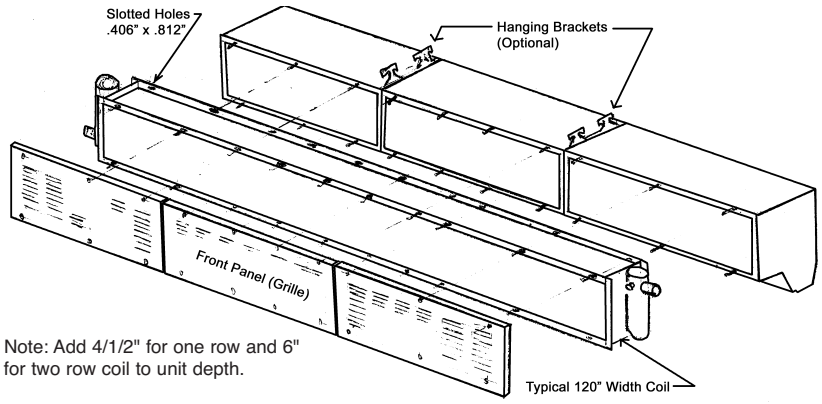

Note: Add 4/1/2" for one row and 6" for two row coil to unit depth.

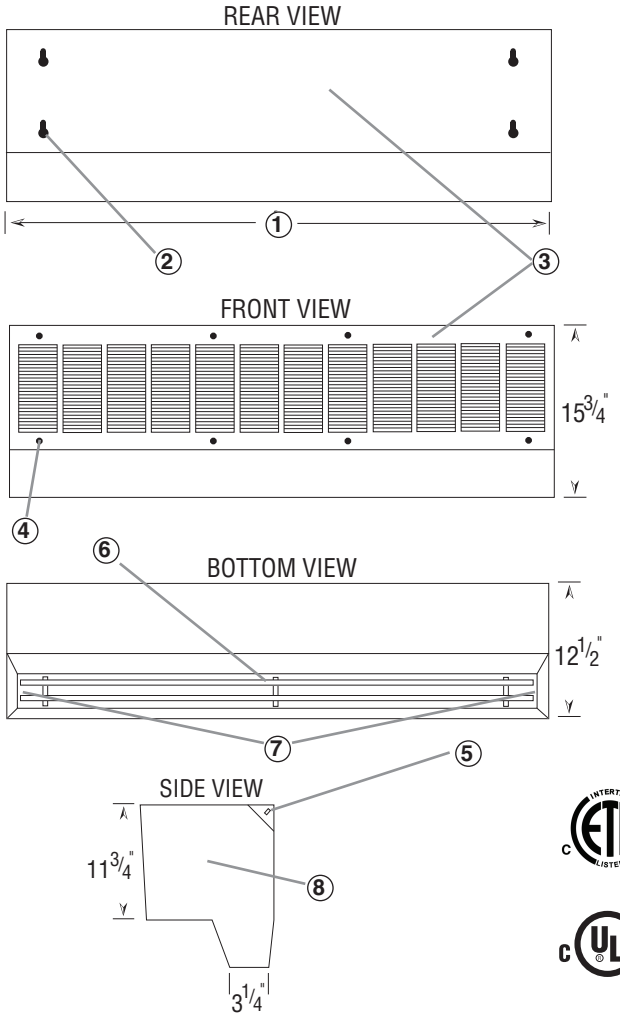

NOTES:

1. Refer to individual model numbers for unit width, motor horsepower and voltage.
2. Keyholes for mounting cabinet flush to wall accepts 3/8" bolts. Four keyholes are provided per motor (60" cabinet has only four keyholes) Mounting template is provided with each unit for easy installation. Mounting hardware and support structure to meet local codes to be supplied by installer.
3. All metal, corrosion-resistant, galvanized steel cabinet and intake grille, with electrostatically applied epoxy finish over powder primer.
4. Intake grille knurl nuts allow for no tool access to motor/blower assembly for inspection and cleaning.
5. Electrical junction box and two-speed rocker switch (single phase units) located on right end plate.
6. Full-length air directional vanes are 1" deep for maximum 40-degree air directional sweep. Unit should be mounted such that the 40-degree sweep of air is unobstructed.
7. Discharge nozzle extends full width for maximum area coverage and efficiency.
8. Complete air curtain is either cULus or cETLus listed and complies with FDA and USDA standards.
9. Add 4/1/2" for one row and 6" for two row coil to total unit depth.
10. All dimensions should be field verified.

PROJECT _____ *CONTRACTOR* _____

LOCATION _____ *DATE* _____

ENGINEER _____ *SHEET* _____ *OF* _____

ARCHITECT _____ *DRAWING NUMBER* _____

LEADING EDGE®
A Marley Engineered Products Brand
470 Beauty Spot Road E • Bennettsville, SC 29512 • Phone: (843)479-4006
Fax: (843) 479-8912 • Toll Free 800-452-4179

HIGH VELOCITY SERIES STEAM AND HOT WATER HEATED MODELS