LEADING EDGE®
A Marley Engineered Products Brand

3-Phase electrically Heated 3 HP Air Curtain Series

PROJECT	ENGINEER	CONTRACTOR	SHEET ___ OF ____
LOCATION	ARCHITECT	DATE	DRAWING NO.

MOTOR / FAN DATA

MARK	HEATED MODEL NUMBER	QTY.	NOZZLE WIDTH (IN)	(#) VOLTS 3-PHASE	(++) HEATER INPUT (KW)	BTU/HR SEE CHART	NUMBER OF MOTORS, HP @ 3450 RPM	NUMBER OF CABINETS	CONTROL VOLTS	MAX VEL (FPM)	AVG VEL (FPM)	AIRFLOW (CFM)	APPROX. WEIGHT (LBS)	REMARKS
	E42++1#30HE		42				1 @ 3	1	24	7200	4760	4495	117	
	E48++1#30HE		48				1 @ 3	1	24	7200	4615	4980	125	
	E60++1#30HE		60				1 @ 3	1	24	7200	4320	5830	141	
	E72++2#30HE		72				2 @ 3	2	24	7200	5040	8160	211	
	E84++2#30HE		84				2 @ 3	2	24	7200	4760	8990	226	
	E96++2#30HE		96				2 @ 3	2	24	7200	4615	9960	241	
	E108++3#30HE		108				3 @ 3	3	24	7200	5040	12240	312	
	E120++3#30HE		120				3 @ 3	3	24	7200	4870	13070	327	
	E132++3#30HE		132				3 @ 3	3	24	7200	4730	14040	342	
	E144++3#30HE		144				3 @ 3	3	24	7200	4615	14940	357	

NOTE:

(++)TOTAL HEATER KW AVAILABLE (SELECT FROM BELOW)

	KW	BTU/HR	KW	BTU/HR	KW	BTU/HR
1-CABINET	**8**	27,320	**12**	40,980	**16**	54,640
2-CABINET	**16**	54,640	**24**	81,960	**32**	109,280
3-CABINET	**24**	81,960	**36**	122,940	**48**	163,920

Note: Multiply listed wattage by .75 for actual 208V rating. Maximum 15 kilowatts per cabinet at 240V.

(#)- SELECT VOLTAGE: 3 = 208V 3-PH, 4 = 240V/208V 3-PH, 5 = 460V 3-PH.

EQUIPMENT SPECIFICATIONS:

GENERAL:
Units shall be Leading Edge brand High Velocity Series Electrically Heated 3 HP / 3-phase Air Curtains.

APPROVALS:
Air Curtains shall meet the requirements of the National Electric Code and shall be Canadian Underwriters Laboratories Listed and Underwriters Laboratories Listed. c UL us.

CABINET / GRILL:
Shall be all-metal, corrosive resistant, electrostatically applied powder paint coated steel.* Cabinets shall incorporate internal structural supports with keyholes for sufficient strength to provide cabinet rigidity for flush wall mounting. Units to have full-length discharge and flush louvers with 1-inch directional vanes for maximum 40 degree sweep for optimum airflow adjustment. Cabinet grill shall allow for no tools access to motor/blower assembly. Unit to be supplied with mounting template operating instructions and parts book.

ELECTRIC HEATING COILS:
Heating element shall be an open helical coil type located directly in the discharge air nozzle for rapid temperature rise. Dual thermal overload protection shall be provide by an automatic reset switch incorporating a warning pilot light and by a replaceable one-shot backup fuse. Heater shall have a Air-Flow safety sensor to disable the the heating elements in the event motor/blowers need servicing or are wired incorrectly. Element control panel shall be located in front of nozzle and hinged to swing down for servicing.

*** Stock color is Beige. Other standard colors available on request include: White, Black, Charcoal Gray, Aluminum and Bronze.**

MOTORS:
Motor(s) shall be heavy duty totally enclosed permanent split capacitor (PSC) double extended shaft type suitable for continuous duty. Each motor shall be resilient mounted and shall incorporate an automatically resetting thermal overload protector and permanently lubricated rubber-sealed ball bearings. Internal motor power cord shall have quick connect plugs for easy removal of blower assembly for cleaning and servicing.

BLOWER ASSEMBLY:
Blower wheels and scroll shall be all metal, corrosive-resistant, galvanized steel. Blower wheels shall be direct drive, double inlet, dynamically balanced, forward curved squirrel cage design.

ELECTRIC WIRING:
Air curtain shall incorporate pre-wired, pre-mounted control panel. Panel shall be mounted on right hand side of cabinet. Control panel adds 4 inches to overall length of cabinet and requires an additional 16 inches of clearance for hinged access panel. Indicator lights on control panel will display "power on", "fan on" and "heat on".

Warranty:
Shall be limited for 24 months.

OPTIONAL ACCESSORIES:

__ On / Off accessories:
- __ Plunger style automatic switch for hinged doors.**
- __ Roller style automatic switch for sliding door.**

__ Mounting Hardware:
- __ Light duty wall bracket for wall mounting from top of unit.
- __ Medium duty wall bracket- for mounting unit up to 12 inches from wall.
- __ Smart-Trac II Adjustable Mounting System for suspension mount installation.

**** Because of the time delay required for elements to heat up, auto switches are not suggested for use with doors that are intermittently open and closed.**

3HP HIGH VELOCITY SERIES MODELS

REAR VIEW

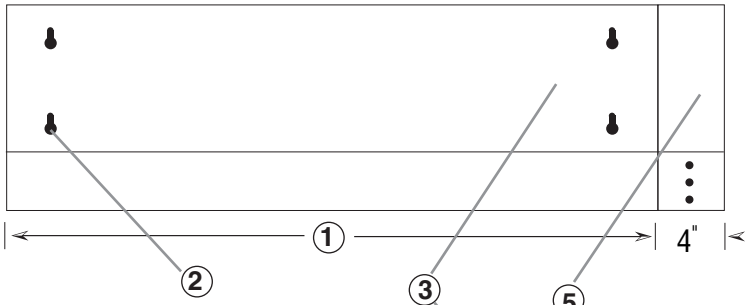

FRONT VIEW

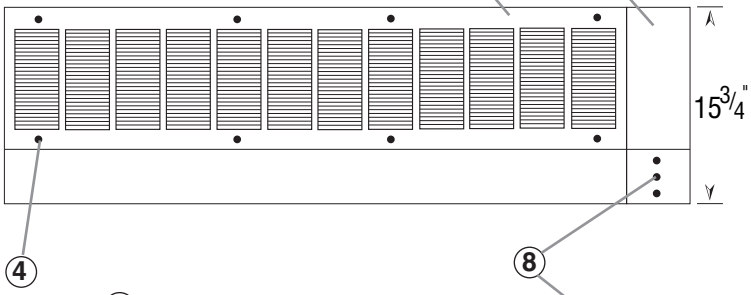

BOTTOM VIEW

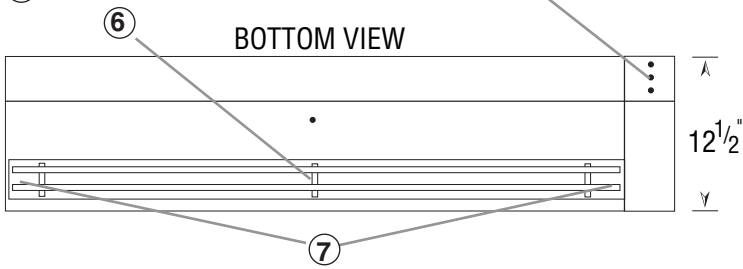

SIDE VIEW

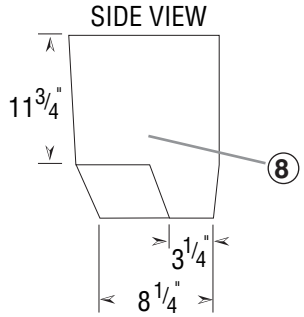

c UL us

NOTES:

1. Refer to individual model numbers for unit width, motor horsepower and heater kilowatts.
2. Keyholes for mounting unit flush to wall accept 3/8" bolts. Four keyholes are provided per cabinet. Mounting hole template is provided with every unit for ease in installation. Mount hardware and support structure to meet local codes.
3. All metal, corrosive resistant, electrostatically applied powder paint coating on cabinet and intake grill.
4. Intake grille knurl nuts allow for no tools required access to motor/blower assembly for inspection and cleaning.
5. Air curtain electrical control panel located on right hand side of cabinet adds 4-inches to overall width of cabinet and requires 16-inches of clearance to swing down hinged access panel door.
6. Full-length air directional vanes are 1" deep for maximum 40-degree air directional sweep. Unit should be mounted such that the 40-degree sweep of air is unobstructed.
7. Discharge nozzle extends full width for maximum area coverage and efficiency.
8. Indicator lights on control panel alert operator when power to the unit is on, and when fan and heat are operating.
9. Element control panel is located in front of nozzle and swings down for servicing.
10. Dual thermal protection and Air-Flow sensing device prevent elements from over heating..
11. Complete unit is cULus listed and meets the requirements of the National Electric Code and federal FDA and USDA standards.
12. All dimensions should be field verified.

PROJECT _____ *CONTRACTOR* _____

LOCATION _____ *DATE* _____

ENGINEER _____ *SHEET* _____ *OF* _____

ARCHITECT _____ *DRAWING NUMBER* _____

LEADING EDGE®
A Marley Engineered Products Brand
470 Beauty Spot Road E • Bennettsville, SC 29512 • Phone: (843)479-4006
Fax: (843) 479-8912 • Toll Free 800-452-4179

3HP HIGH VELOCITY SERIES MODELS