LEADING EDGE®
A Marley Engineered Products Brand

Heavy Duty High Performance Industrial Ceiling Fans

PROJECT

DATE

SHEET OF

ENGINEER

ARCHITECT

CONTRACTOR

SUBMITTED BY

NOTE: All measurements are calculated from ceiling or beam line with "J" hook mounted securely in center of 1½" deep conduit box and downrod supplied on rubber roller (See illustration).

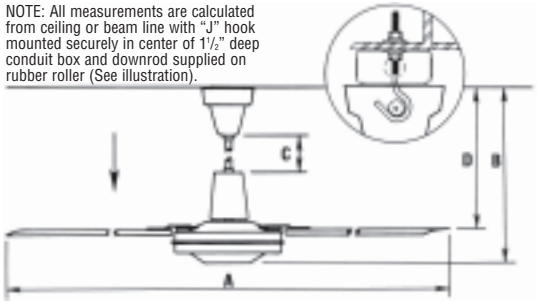

CEILING FAN DIMENSIONS* (mm)				
		MODELS SUPPLIED WITH 24" DOWNROD		
MODEL SERIES	A	B	C	D
56001**, 56011, 56007, 56002	56"	33½"	19"	30½"
60001, 60002, 60011	60"	34"	19"	30¾"

* Allow for 1/2" variance in "J" hook depth.
** Identical measurements for 220 volt and 277 volt models.

Ceiling Fans to be furnished as specified, Leading Edge. Fans to be U.L. listed Standard 507 (model 56007 is cULus listed) with matching U.L. listed solid state controls. All motors to be direct-drive permanent split capacitor type, with permanently sealed ball bearings. All motors to have built in, self-resetting (internal) thermal overload protector TI9700.

All fans to have factory installed Secondary Support Cable Assembly connected to motor shaft, with minimum 6 feet galvanized cable ⅛" 7x7 with rated breaking strength of 1700 lbs. and must comply with CSA std. C22.2
Sept. 1986.

Fan blades to be straight with contoured shaped design for maximum efficiency. Note: Fans shall not be installed with blade height less than 10' from floor.

Fans used with motor speed controls must be labeled in accordance with U.L. 507 "Suitable for use with solid state motor speed controls".

Factory supplied accessories to include:
- A) Solid state motor speed controls (U.L. listed)
- B) Special length downrods
- C) Totally enclosed impact resistant fan guard
- D) Tilted canopy cover
- E) Outdoor location installation kit

SCHEDULE

ITEM	QTY.	MARK	MODEL NUMBER	BLADE SWEEP	CFM	AREA COVERAGE	RPM	VOLTS	AMPS	ACCESSORIES	REMARKS

Commercial Ceiling Fans

LEADING EDGE®
A Marley Engineered Products Brand

NOTE: All measurements are calculated from ceiling or beam line with "J" hook mounted securely in center of 1½" deep conduit box and downrod supplied on rubber roller (See illustration).

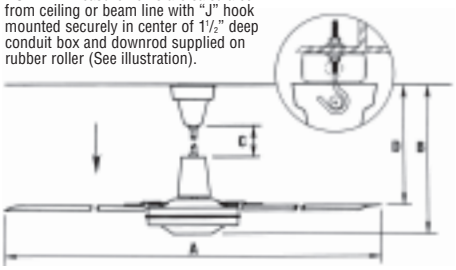

HEAVY DUTY INDUSTRIAL MODELS

MODEL NUMBER	BLADE SWEEP	COLOR	VOLTS	CYCLE	FULL LOAD AMPS	FULL LOAD WATTS	RPM	MAX CFM†	AREA COVERAGE PER FAN††	WEIGHT
56001	56"	WHT	120	50/60	1.0	110	275	27,500	3800 sq.ft.	24 lbs
56011	56"	BRN	120	50/60	1.0	110	275	27,500	3800 sq.ft.	24 lbs
56002	56"	WHT	220	50/60	.52	110	260	26,000	3800 sq.ft.	24 lbs
56007	56"	WHT	277	50/60	.60	110	260	26,000	3800 sq.ft.	24 lbs
60001	60"	WHT	120	50/60	1.4	160	315	46,000	5000 sq.ft.	30 lbs
60011	60"	BRN	120	50/60	1.4	160	315	46,000	5000 sq.ft.	30 lbs

ACCESSORIES & MISCELLANEOUS ITEMS

MODEL NUMBER	ITEM
28001	• FAN GUARD 62" DIAMETER FOR INDUSTRIAL 56" AND 60" FANS†
9FP024	WHITE TILTED CANOPY COVER
9FP023	BROWN TILTED CANOPY COVER
9D##BW	#DOWNRODS - 12", 18", 36", 48" (FOR LONGER SIZES - CONSULT FACTORY)
99992	OUTDOOR LOCATION INSTALLATION KIT
9DKIT	DOWNROD EXTENSION KIT

• Use only with heavy-duty industrial models † Fan Guards ship via UPS # Available in brown, replace "W" in model number with "B"

Custom models available. Consult with factory for information and specifications.

OPTIONAL SOLID STATE MOTOR SPEED CONTROLS

MODEL NUMBER	VOLTS	AMPS	CONTROLS 56"/120 56001 56011 UNITS	CONTROLS 56" 220/277 56002 56007 UNITS	CONTROLS 60"/120 60001 60011 UNITS
12003	120	3	2		1
12006	120	6	5		3
12008	120	8	6		4
12012	120	12	10		8
22003	220	3		2	
22008	220	8		6	
22012	220	12		8	
27703	277	3		2	
27708	277	8		6	
27712	277	12		8	

NOISELESS MECHANICAL CONTROL

12001N	120	1	1	**For use with 56" models only.**
12005N	120	5	2	

3 YEAR WARRANTY REGISTRATION AGAINST MANUFACTURERS DEFECTS IS INCLUDED WITH EACH FAN.

† Effective amount of air volume moved past a plane 20ft. from fan, industry test. All specifications subject to change and improvement.

†† Area coverage rated for heat destratification at 20' blade mounting height.