MEP-HT-IMC-3 and MEP-HT-IMC-3-2P

Installation Instructions

Power Connection Kits with Junction Box for Multiple Heating Cables.

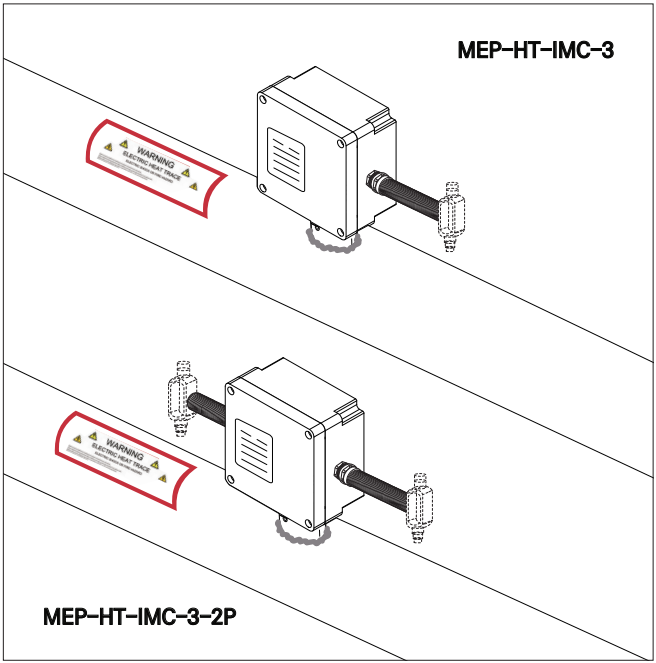

Description

- MEP-HT-IMC-3 Series is an above-insulation power connection kits for use with Marley Engineered Products QM-CRGX, BK-CRGX, QM-LSRX, BK-LSRX, QM-MSRX, BK-MSRX and QM-HSRX, BK-HSRX self-regulating heating cables.
  - MEP-HT-IMC-3 has one 3/4" through-hole for 3/4" conduit and fittings to connect power to a maximum of three heating cables.
  - MEP-HT-IMC-3-2P has two 3/4" through-holes for 3/4" conduit and fittings to connect dual power to two heating cables.
- MEP-HT-IMC-3 can be used for splice, tee, and end termination if the through hole is blocked with sealing plug kit.
- MEP-HT-IMC-3 Series employs terminal blocks that accommodate a maximum conductor size of 8AWG* for fine-stranded conductors.

  *If a maximum conductor size of 6AWG is required, please contact Marley Engineered Products for larger terminal blocks.

Approvals

MEP-HT-IMC-3 and MEP-HT-IMC-3-2P

FM C US APPROVED

FM26US0013X, FM26CA0003X

Hazardous (classified) locations,
indoors and outdoors
Class I, Division 2, Groups A, B, C and D T*;
Class II/III, Division 2, Groups F and G T*;
Class I, Zone 1, AEx/Ex eb IIC T* Gb;
Zone 21, AEx/Ex tb IIIC T* °C Db;
Type 4X, IP66
Ta = −40°C to +55°C

- T* = For T-rating, please refer to cable documentation.

Kit Contents

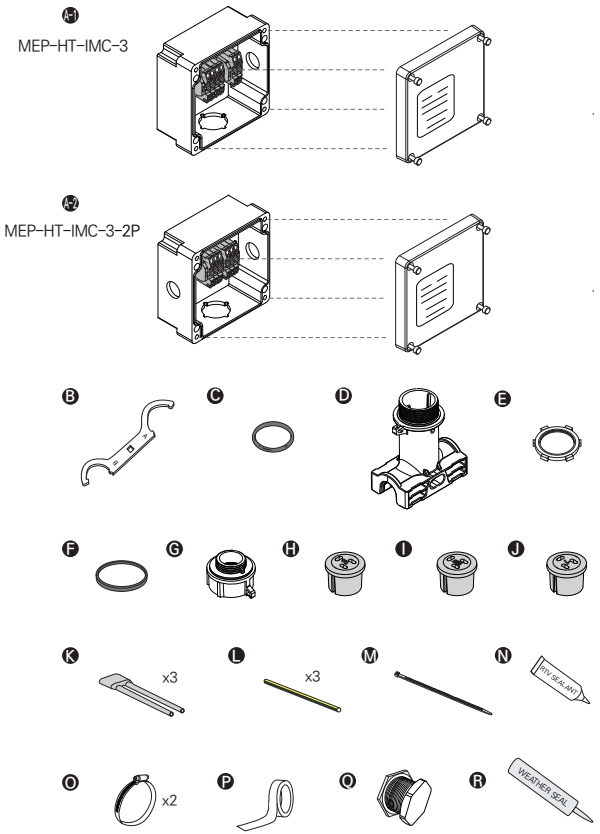

Item	Description	Qty.
A–1	MEP–HT–IMC–3 Junction Box Assembly	1
A–2	MEP–HT–IMC–3–2P Junction Box Assembly	
B	Wrench	1
C	Stand O–ring	1
D	Pipe Stand	1
E	Lock Nut	1
F	Square–Ring for Compression Cap	1
G	Compression Cap	1
H	S Grommet for a*–CRGX–CT, a*–LSRX–CT, a*–MSRX	1
I	M Grommet for a*–CRGX–CR, a*–LSRX–CR	1
J	L Grommet for a*–HSRX	1
K	Core Sealer	3
L	Insulation Tube (Y/G)	3
M	Cable Tie	1
N	RTV Sealant	1
O	Pipe Strap (Sold Separately)	2
P	Fixing Tape (Sold Separately)	1
Q	Sealing Plug (Sold Separately)	1
R	Weather Seal (Sold Separately)	1

· a* = “QM” for QMARK, or “BK” for BERKO

Tools Required

- Wire cutters
- Marking pen
- Adjustable pliers
- Needle nose pliers
- Utillity knife
- Large slotted screwdriver
- 3/16" (or 5mm) hex key

Additional Materials Required

- Sealing Plug Kit if MEP-HT-IMC-3 is used for splice, tee, and end termination.
- Pipe Straps

Model	Pipe Size	Unit Qty.
HTPS-6	Up to 6" Outer Diameter	1 each
HTPS-10	Up to 10" Outer Diameter	1 each

- Small Pipe Adapter

  For installation on small pipes (<1" or 25mm diameter), contact Marley Engineered Products for small pipe adapter, model HTSPA-1.

- Fixing Tapes
  - HTFT-1 Fiberglass Tape: 3/8" x 66ft. roll
  - HTAT-1 Aluminum Tape: 2" x 180ft. roll

User Provided Materials

- Weather seal, conduit, fittings and conduit drain

CAUTION

- The minimum installation temperature is -40°F (-40°C). For more convenient installation, we recommend performing the installation at a temperature above freezing. Store the kit at a temperature above freezing until installation.

WARNING

- Marley Engineered Products heat-tracing systems must be installed correctly to ensure proper operation and to prevent shocks and fires. Pay attention to warnings and carefully follow applicable installation instructions.
- For two or more heating cables powered by a single circuit,the total length of all heating cables should not exceed the maximum circuit length allowed in the chart published in the Marley Engineered Products self-regulating heating cables datasheets or design guide. Additionally, the total current of all heating cables should not surpass 80% of the circuit breaker rating.
- **Electrical Shock or Fire Hazard :** Follow Marley Engineered Products requirements and comply with NEC, CEC, and all relevant local codes.
  Ground-fault equipment protection set at 30 mA must be used on each heating cable branch circuit. Arcing may not be stopped by conventional circuit breakers.
- **For MEP-HT-IMC-3-A Only :** Remove L1 and L2 jumpers on the terminal blocks when used as an end termination for two heating cables.
- Use wire rated for a temperature of at least 80°C, which is 5° C above the rated service temperature.
- The approvals and performance of the heat tracing systems are based exclusively on the use of Marley Engineered Productsspecified parts. It is imperative that parts are not substituted and electrical tape is not used.
- Damaged bus wires have the potential to overheat or cause short circuits. When scoring the jacket or core, it is essential to avoid breaking the bus wire strands.
- Both components and cable ends must be kept dry before and throughout the installation process.
- The potential for bus wires to overheat or short circuit exists if the bus wire strands are broken while preparing the cable for connection. Reuse of grommets or use of the wrong grommet can result in leaks, cracked components, shocks, or fires. Ensure the type or opening size of grommet is correct for the heating cable being installed. A new grommet is recommended whenever the cable has been pulled out of the component.
- Before and during installation or servicing, all power circuits must be de-energized.
- Read the MSDS for RTV and components carefully.
- Use thermal insulation and attachment tape suitable for the specific application and heat-tracing temperature. Do not secure heating cables with metal straps or wire, as this may damage the cables.

Specific Conditions of Use

- Marley Engineered Products MEP-HT-IMC-3 Series Connection Kits must be installed using Marley Engineered Products QM-CRGX, BK-CRGX, QM-LSRX, BK-LSRX, QM-MSRX, BK-MSRX and QM-HSRX, BK-HSRX Series Heating Cables.
- Refer to the installation instructions to reduce the potential of an electrostatic charging hazard on the enclosures of the connection kits.
- The end-user shall mount the equipment per Marley Engineered Products instructions.
- To use this kit for splice or tee connections, or end termination, Marley Engineered Products Sealing Plug Kit must be purchased separately.

1.

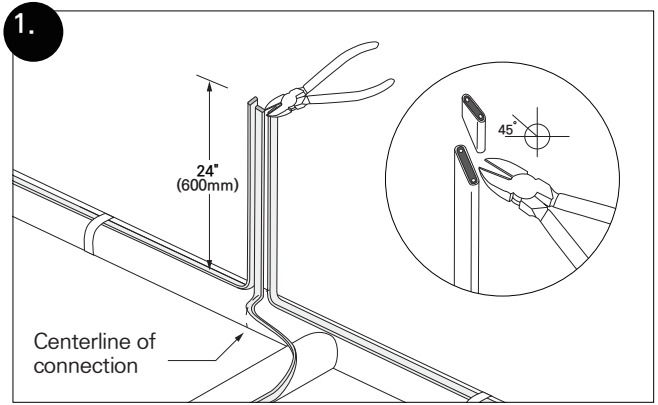
24"
(600mm)
45˚
Centerline of
connection

2.

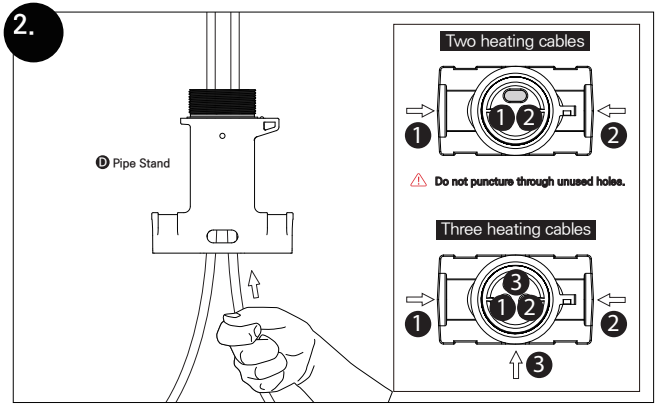
Ⓓ Pipe Stand
Two heating cables
1 2
1
2
⚠ Do not puncture through unused holes.
Three heating cables
3
1 2
1
2
3

3.

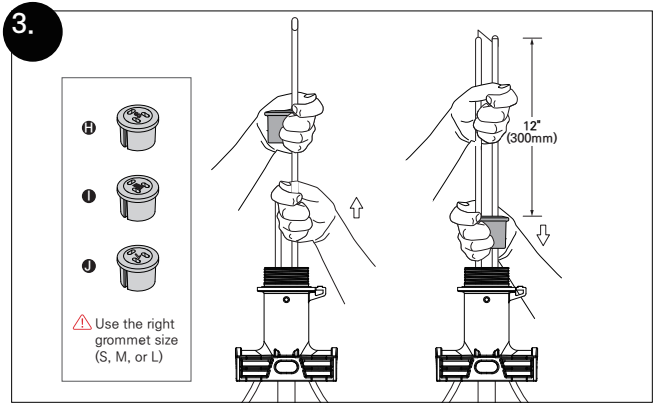
Ⓗ
Ⓘ
Ⓙ
⚠ Use the right
grommet size
(S, M, or L)
12"
(300mm)

4.

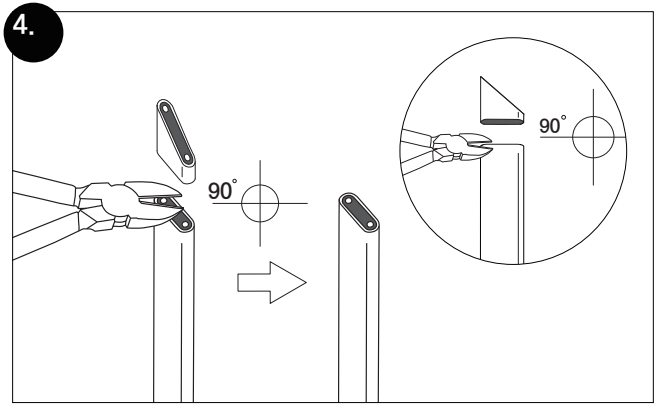
90˚
90˚

Heating Cable

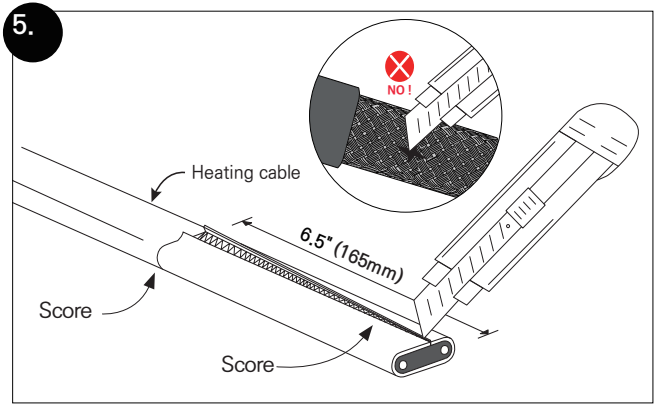

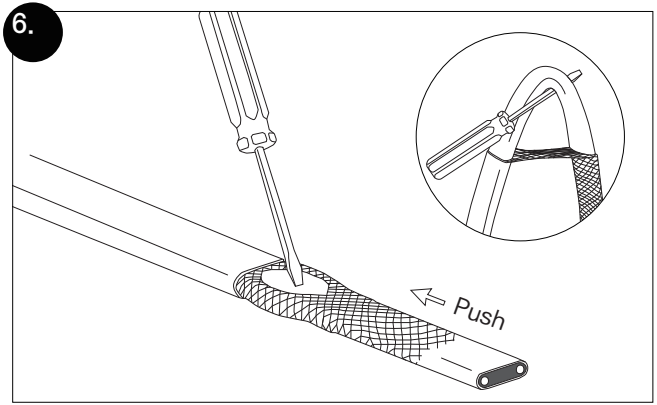

Heating Cable

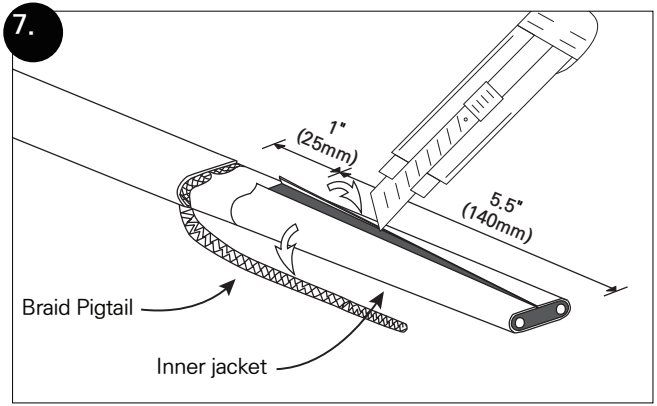

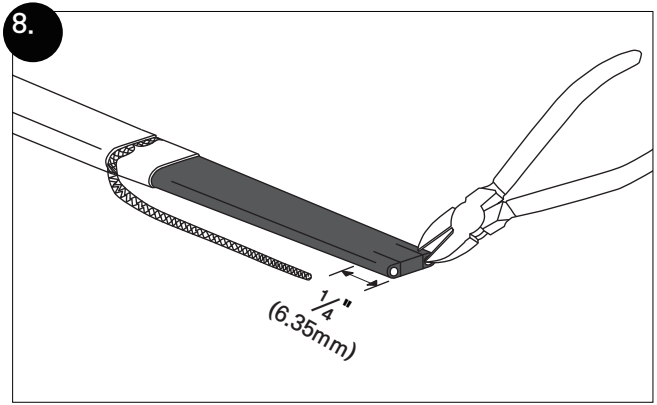

9.

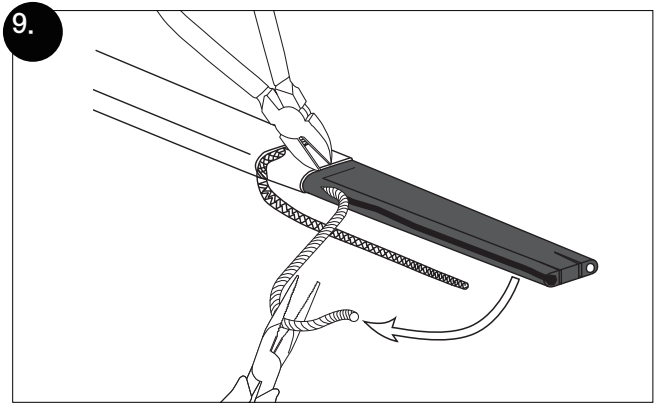

10.

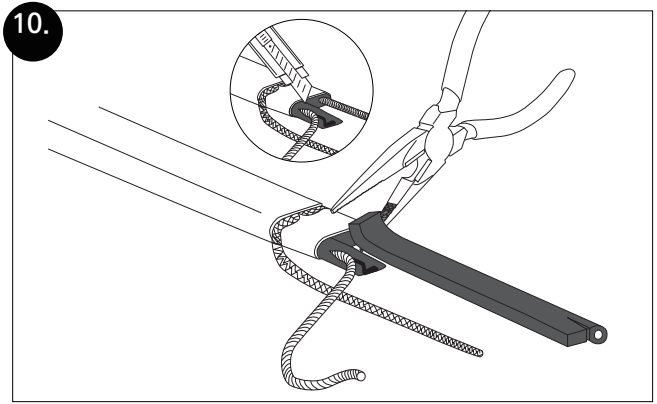

11.

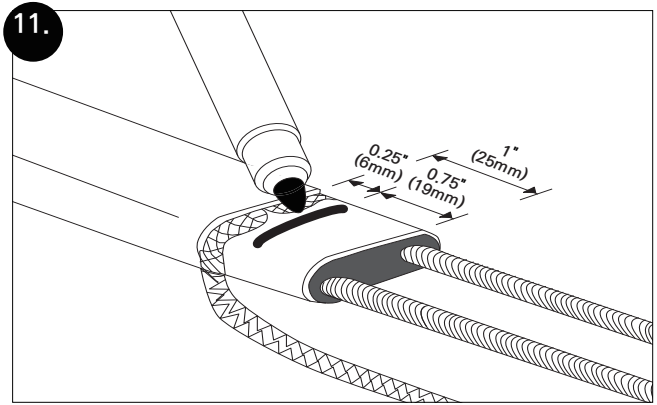
0.25"
(6mm)
0.75"
(19mm)
1"
(25mm)

12.

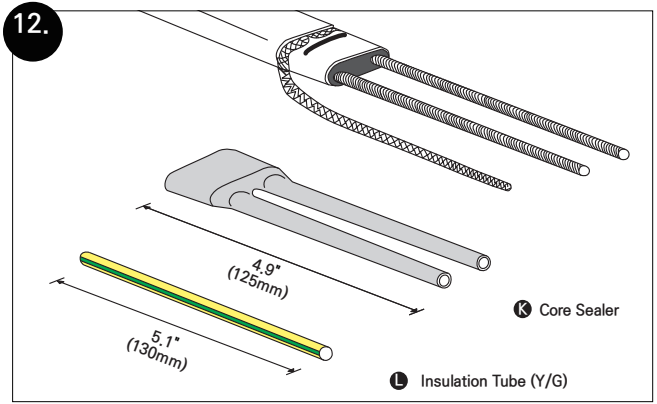
4.9"
(125mm)
5.1"
(130mm)
K Core Sealer
L Insulation Tube (Y/G)

13.

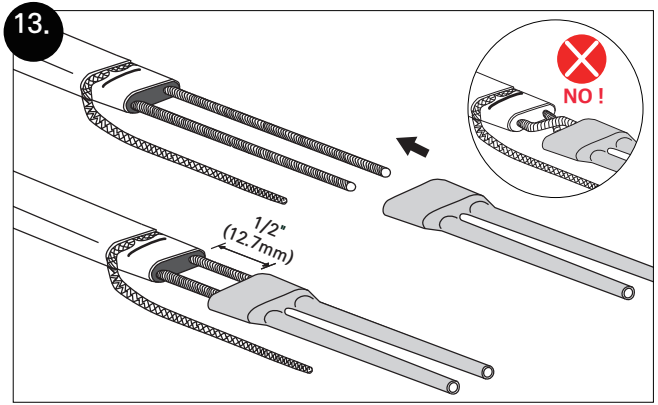

14.

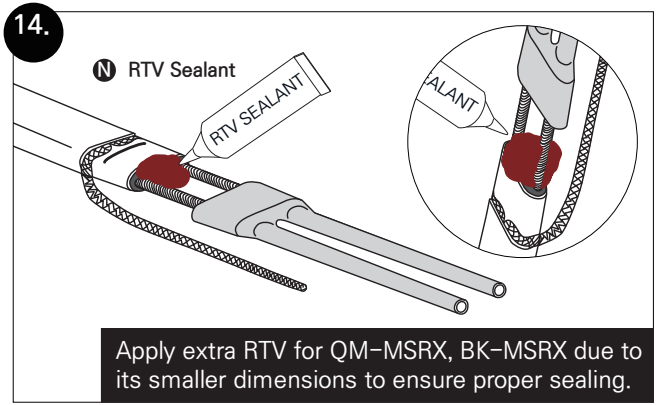

Apply extra RTV for QM-MSRX, BK-MSRX due to its smaller dimensions to ensure proper sealing.

15.

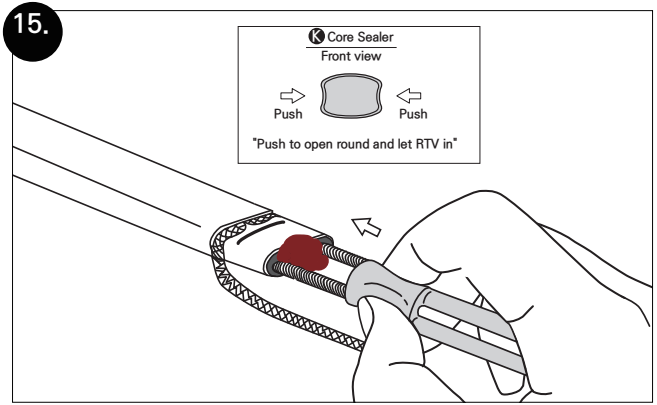

16.

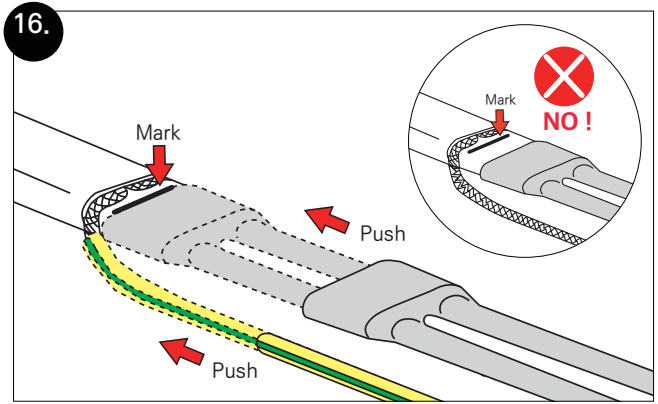

Heating Cable

17.

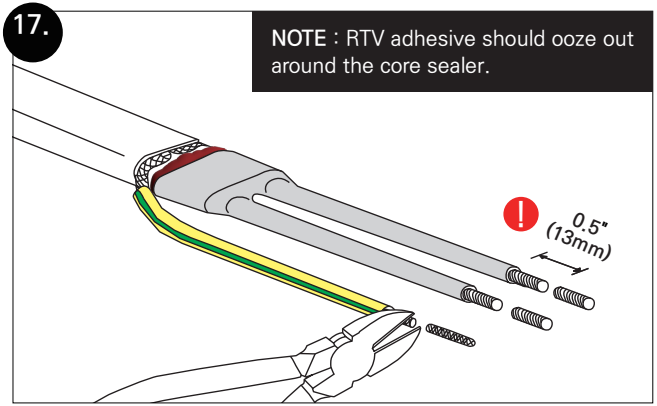

18.

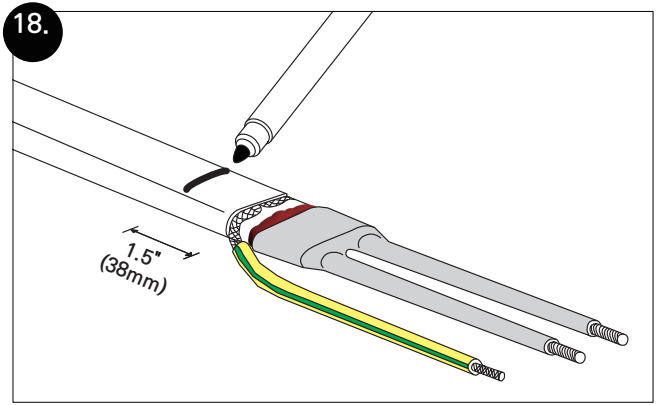

MEP-HT-IMC-3 Kit

19.

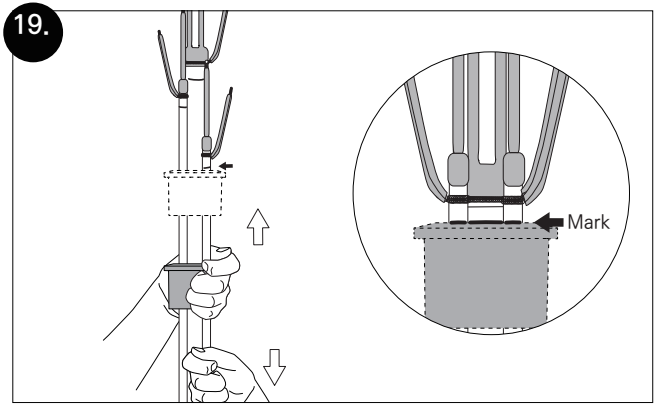

20.

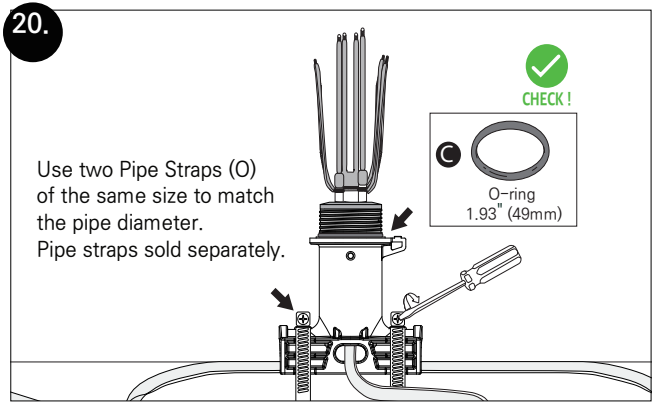

21.

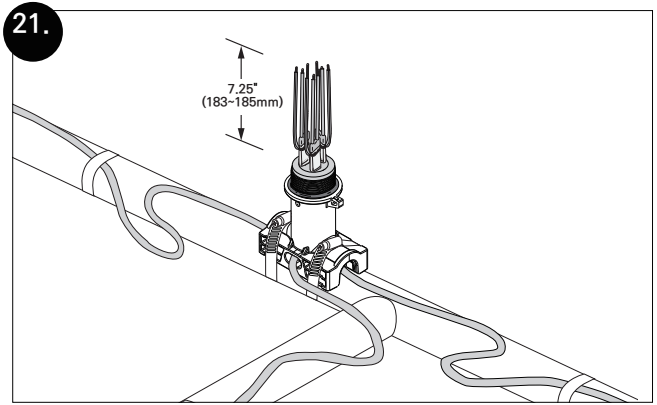

22.

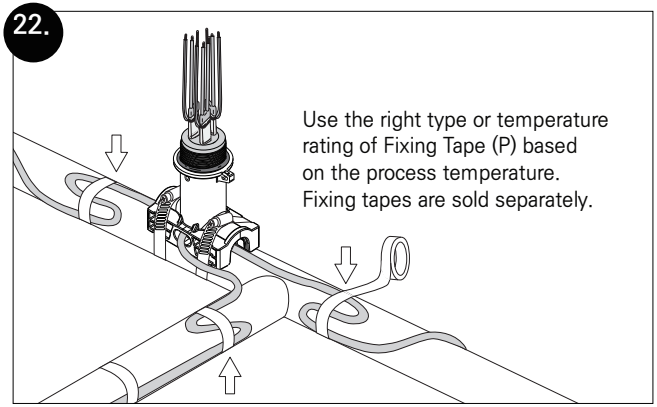

Use the right type or temperature rating of Fixing Tape (P) based on the process temperature. Fixing tapes are sold separately.

23.

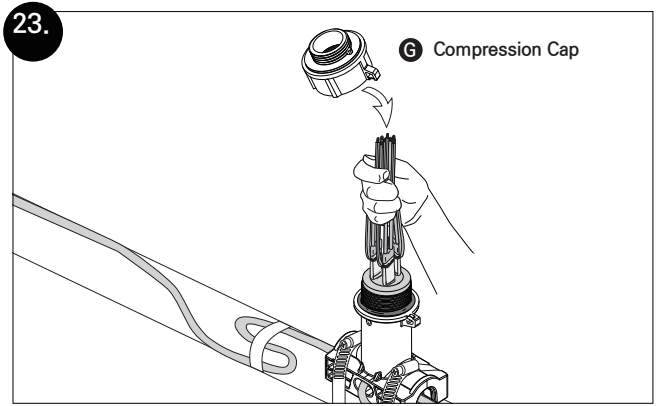

24.

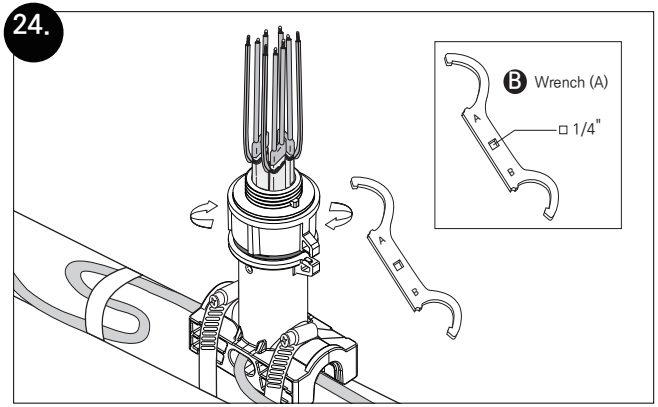

25.

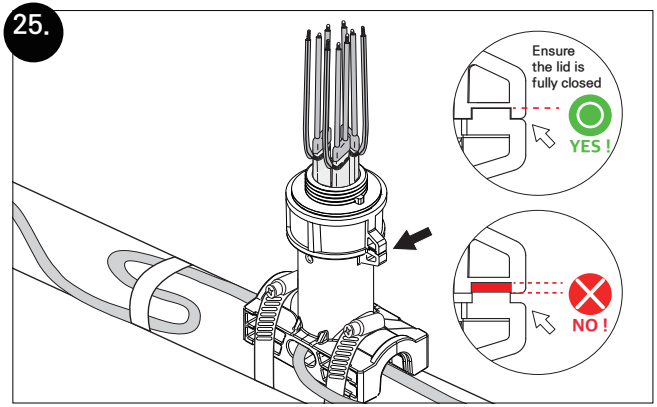
Ensure
the lid is
fully closed
YES !
NO !

26

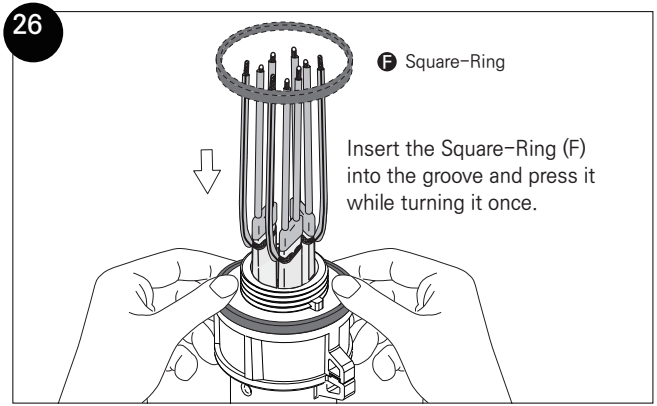
F Square-Ring
Insert the Square-Ring (F)
into the groove and press it
while turning it once.

27.

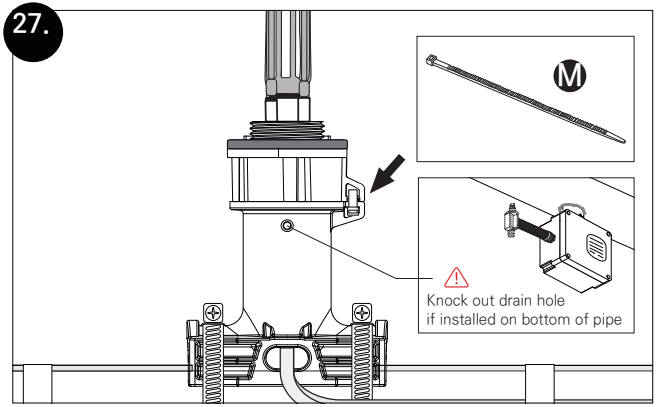
M
Knock out drain hole
if installed on bottom of pipe

28. Follow these steps for single power entry (MEP-HT-IMC-3).

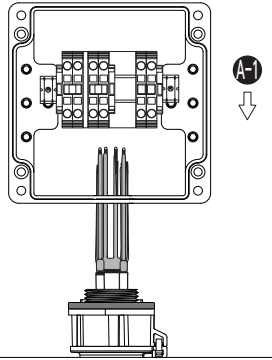

29.

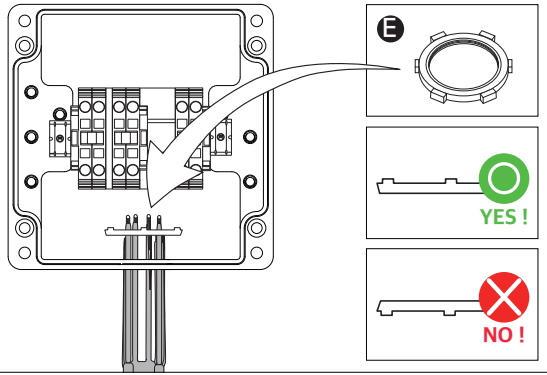

30.

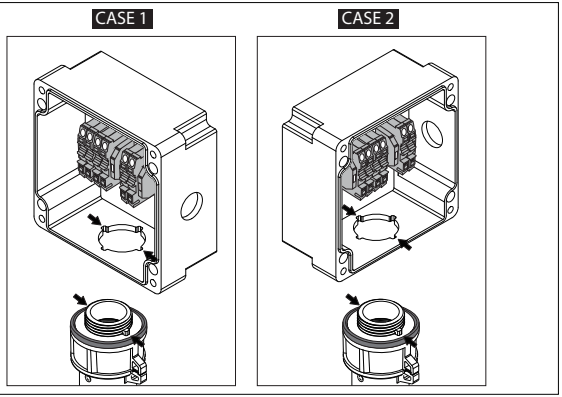

31.

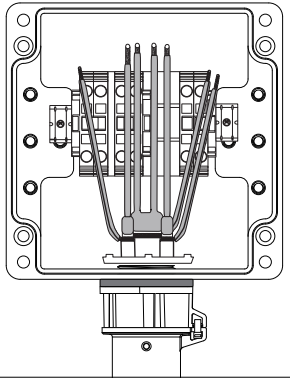

32.

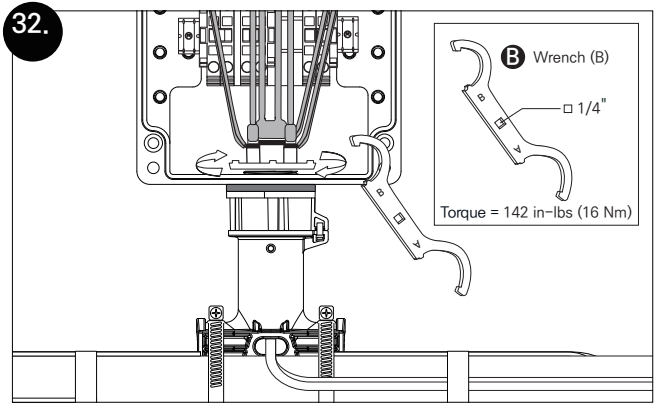

33. Power Connection

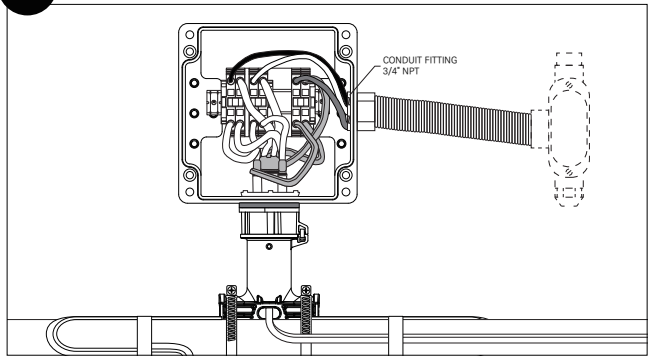

34.

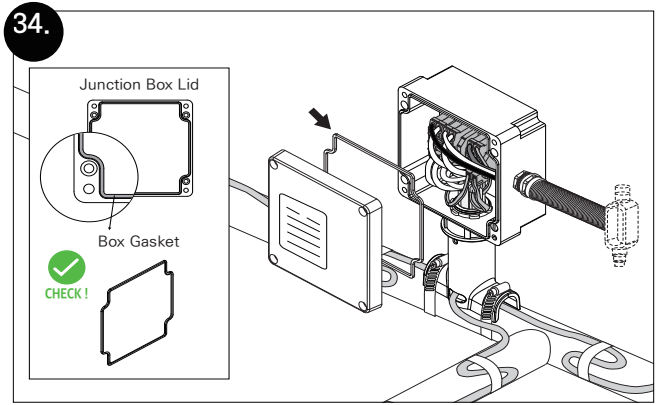

35.

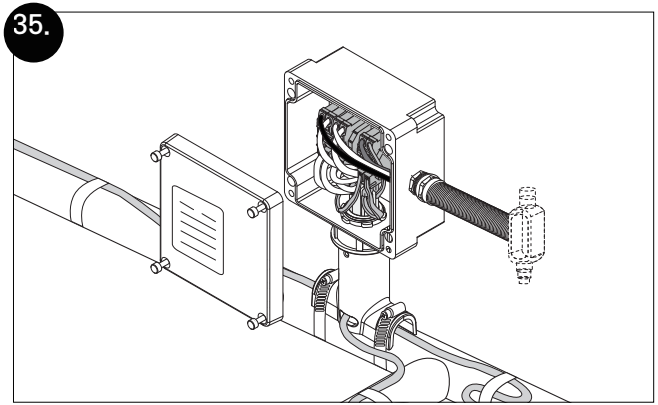

Single Power Entry (MEP-HT-IMC-3)

36.

Tool required
: 3/16" (or 5mm) hex key
Torque applied
: 48 ~ 53 in-lbs (5.5 ~ 6.0 Nm)

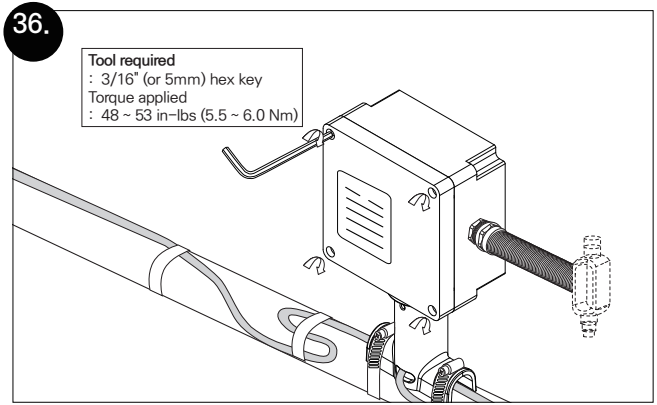

37.

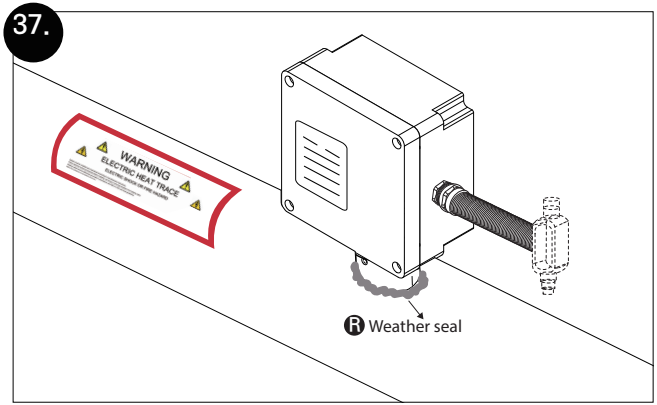

Dual Power Entries (MEP-HT-IMC-3-2P)

28. Follow these steps for dual power entries (MEP-HT-IMC-3-2P).

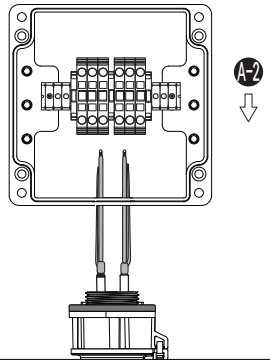

29.

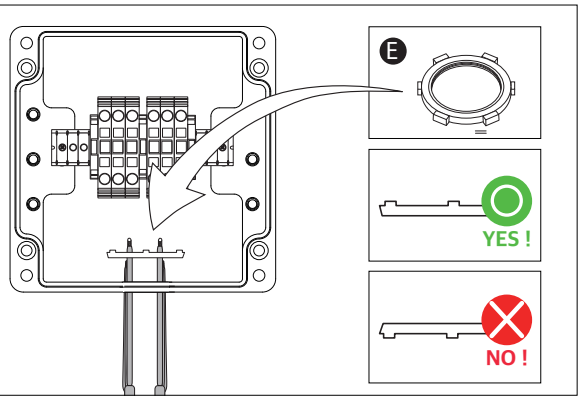

30.

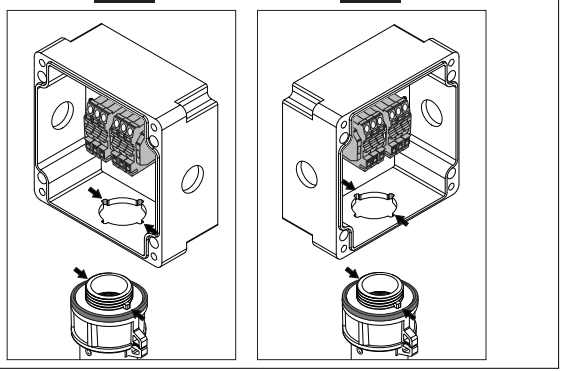

31.

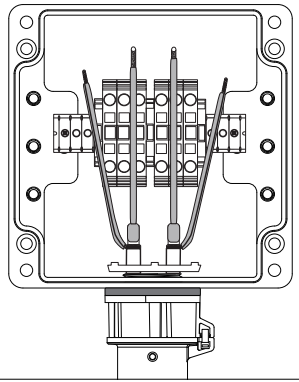

32.

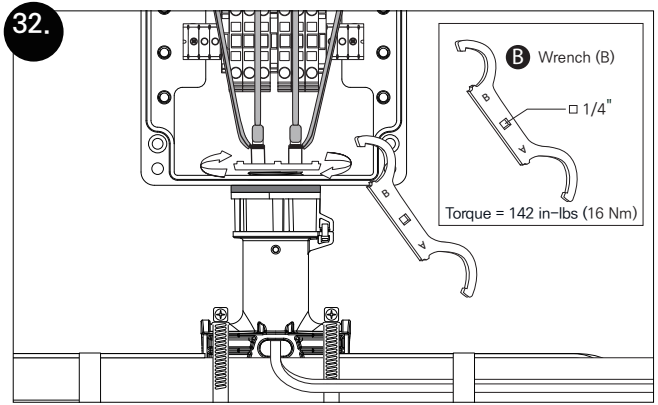

33. Power Connection

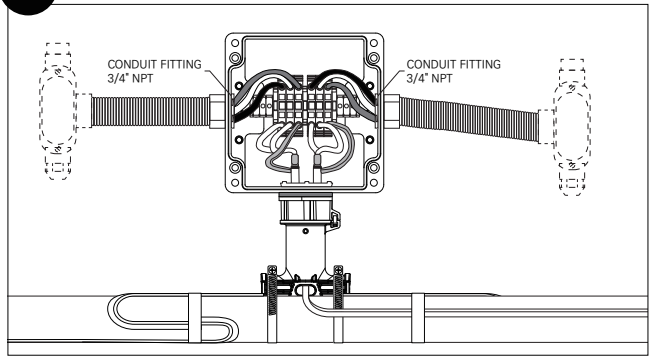

34.

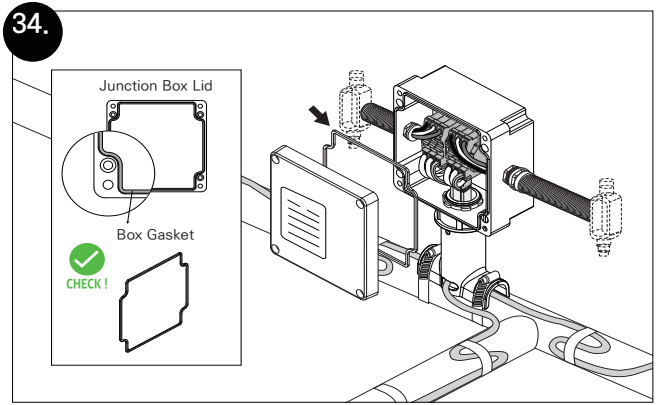
Junction Box Lid
Box Gasket
CHECK !

35.

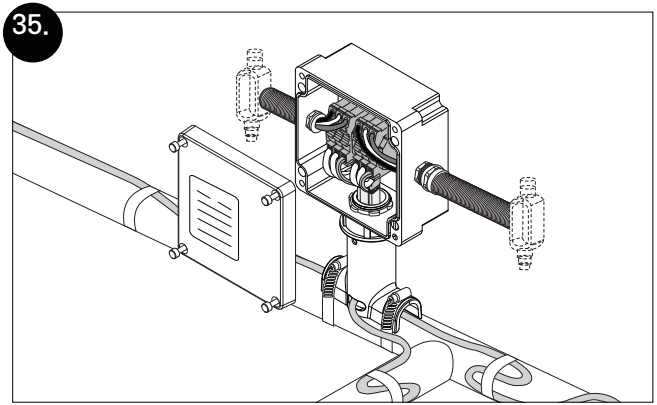

36.

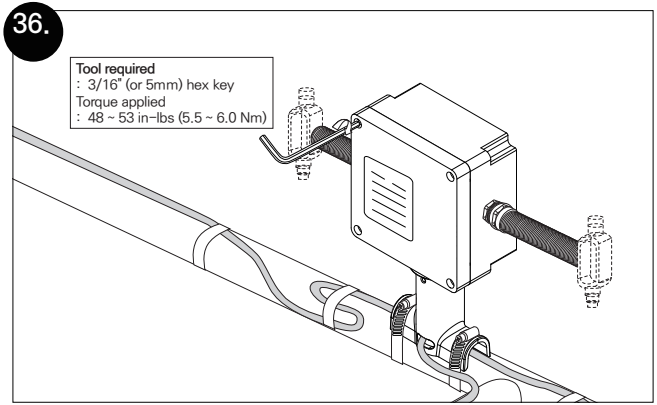
Tool required
: 3/16" (or 5mm) hex key
Torque applied
: 48 ~ 53 in-lbs (5.5 ~ 6.0 Nm)

37.

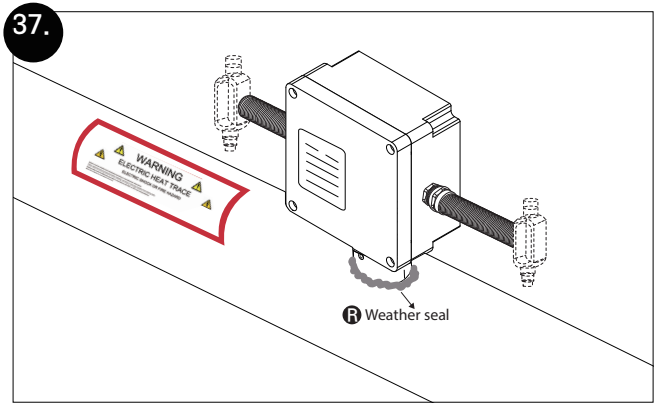
WARNING
ELECTRIC HEAT TRACE
Weather seal

1.

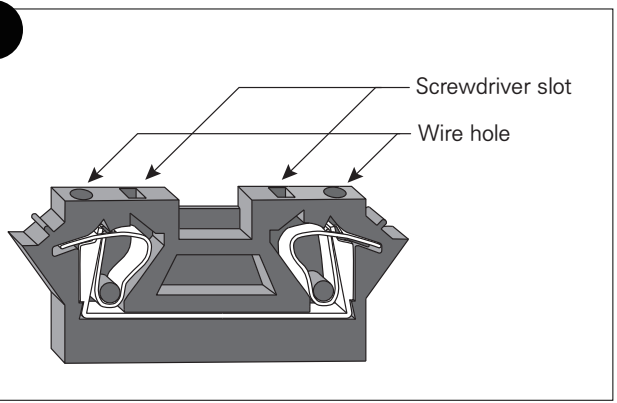

2.

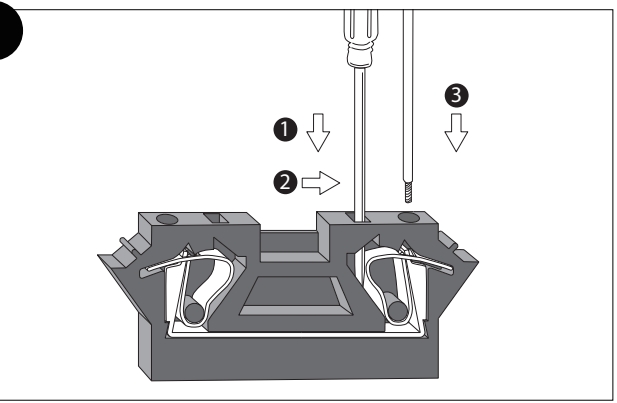

3.

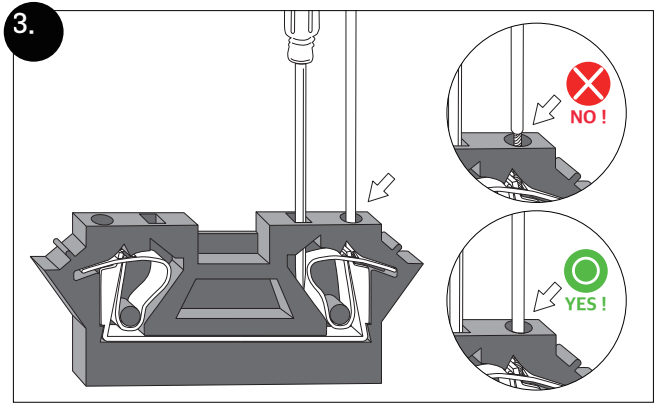

4.

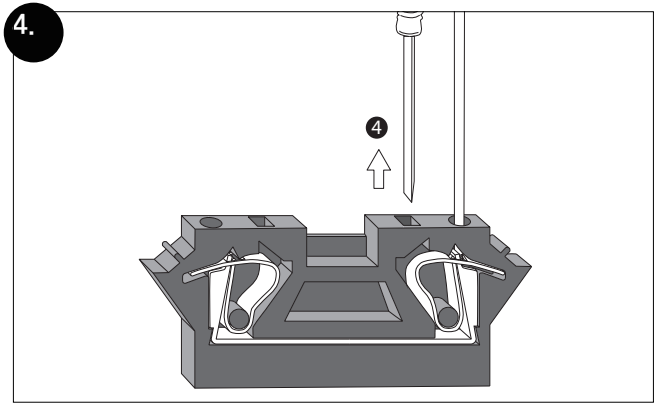

Terminal Blocks

5.

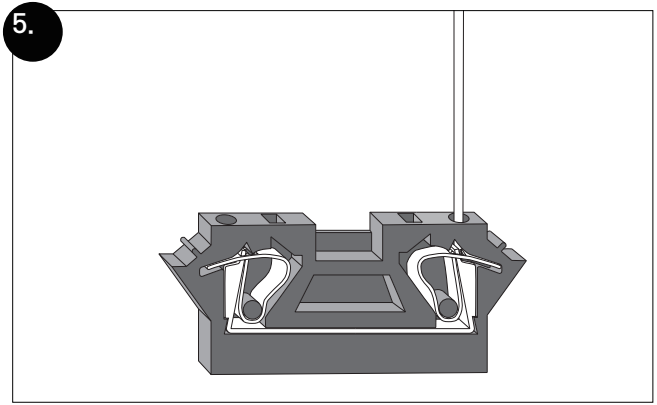

Terminal Blocks Wiring

1A. Power Connection: MEP-HT-IMC-3 with Single Power Entry

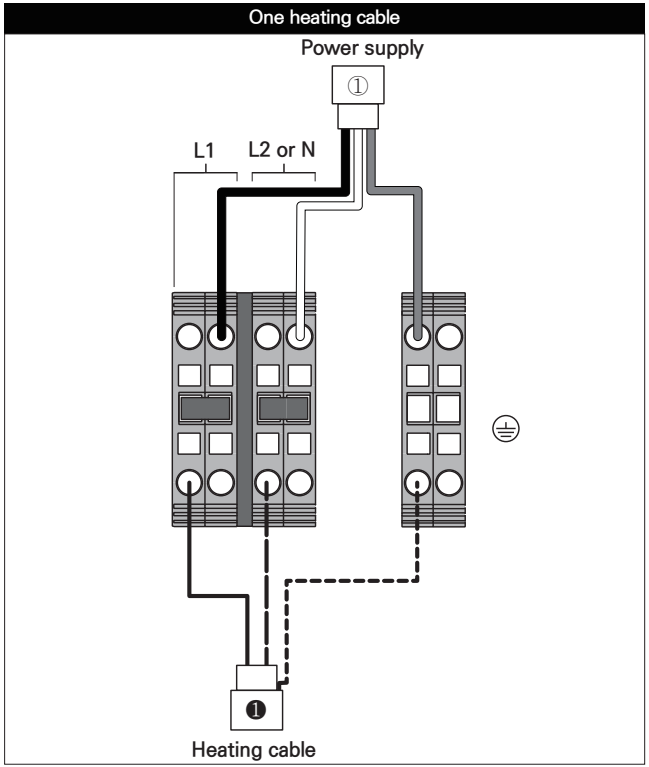

1A. Power Connection: MEP-HT-IMC-3 with Single Power Entry

Two or three heating cables

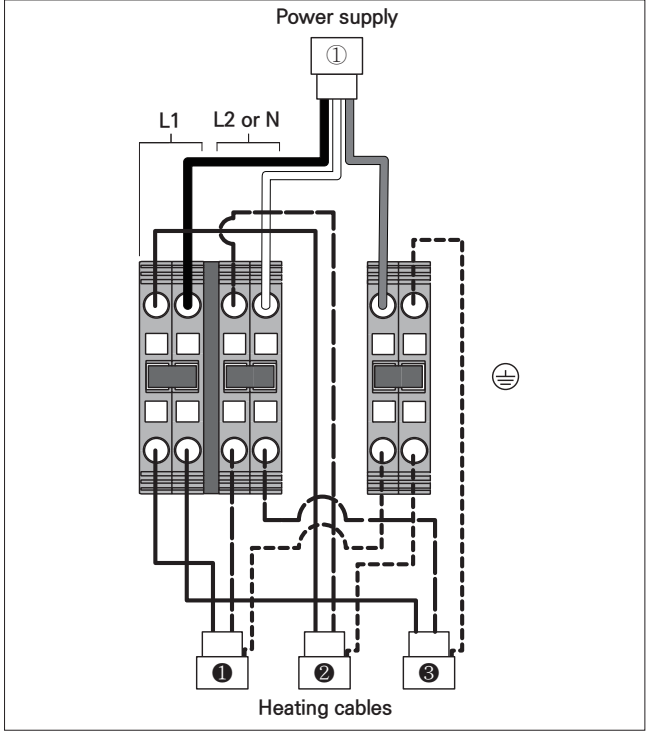

1B. Power Connection: MEP-HT-IMC-3-2P with Dual Power Entries

Two heating cable circuits

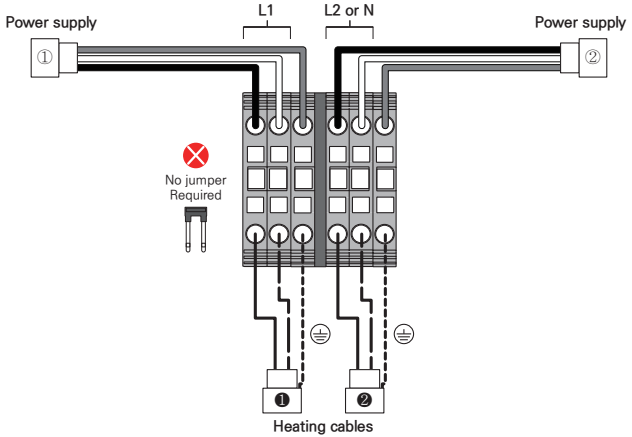

*** NOTE**

- For powering two heating cable circuits, use the designated MEP-HT-IMC-3-2P junction box available from Marley Engineered Products.
- MEP-HT-IMC-3-2P is supplied with two factory-engineered through-holes for dual power cable entry.
- Do **not** modify or drill additional holes in the standard MEP-HT-IMC-3 enclosure to accommodate dual circuits.

Terminal Blocks Wiring

* NOTE: When using the MEP-HT-IMC-3 Series Power Connection Kits for tee, splice, or end termination, unused through-holes must be sealed with Marley Engineered Products Sealing Plug Kit (sold separately).

2A. Splice Connection

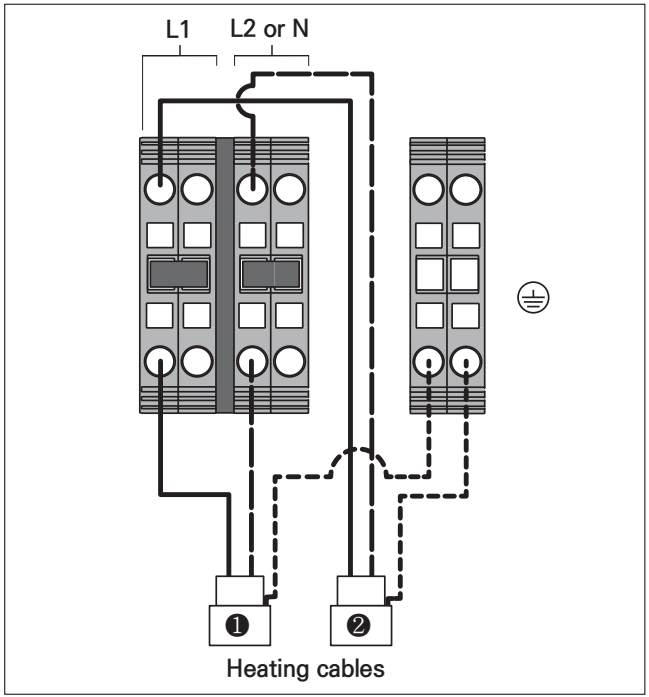

Terminal Blocks Wiring

2B. Tee Connection

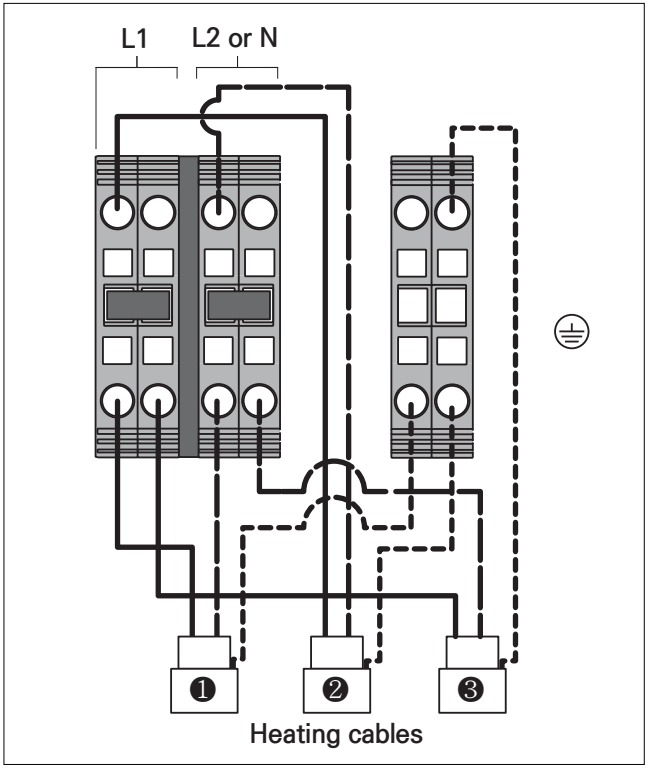

2C. End Termination

One heating cable

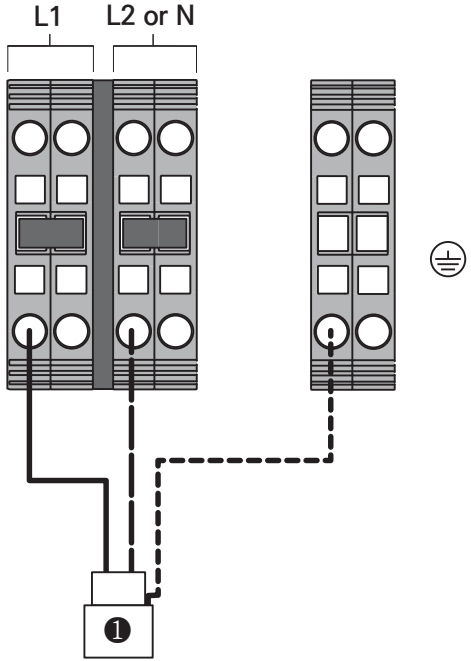

2C. End Termination

Two heating cables

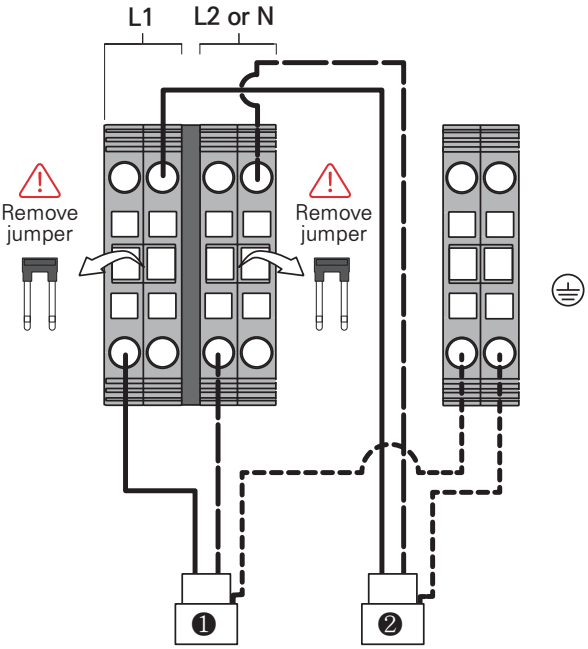



ADDRESS 425 Hanley Industrial Ct, St.Louis, MO 63144
WEB www.marleymep.com