MEP-HT-IESL Series

Installation Instructions

Lighted End Seal

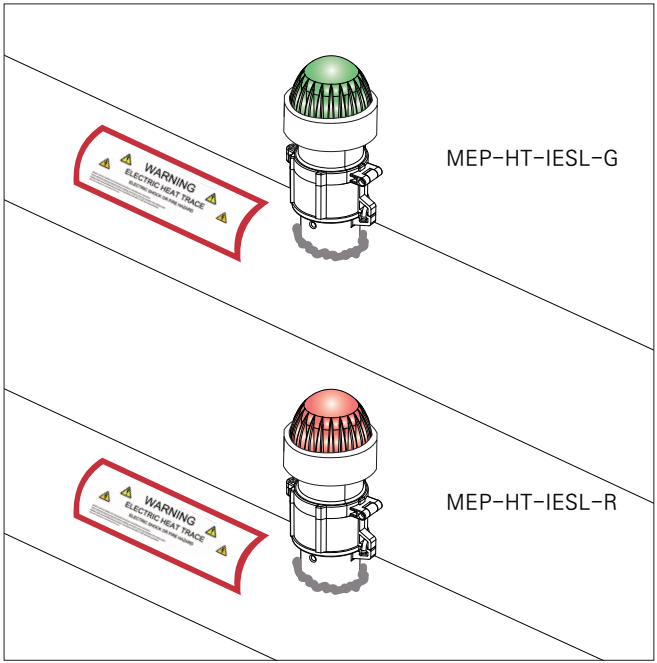

Description

- MEP–HT–IESL is an above–insulation lighted end seal kit for use with Marley Engineered Products QM–CRGX, BK–CRGX, QM–LSRX, BK–LSRX, QM–MSRX, BK–MSRX and QM–HSRX, BK–HSRX self–regulating heating cables.
- MEP–HT–IESL can be used to terminate Marley Engineered Products heating cables with a red or green light indicator.
- The light indicator is available in green or red.

Catalog Number Designation

MEP–HT–IESL – □

└ G : Green Light Indicator
R : Red Light Indicator

Approvals

MEP–HT–IESL

FM APPROVED

Ordinary (Unclassified) Locations
Rated Voltage: 100–277 Vac
Type 4X / IP66
Ta = –40°C to 55°C

FM C US APPROVED

Hazardous (Classified) Locations,
Indoors and Outdoors
Rated Voltage: 100–240 Vac
Class I, Division 2, Groups A, B, C and D T*;
Class II/III, Division 2, Groups F and G T*;
Class I, Zone 1, AEx/Ex eb mb IIC T* Gb;
Zone 21, AEx/Ex tb IIIC T* °C Db;
Type 4X, IP66
Ta = –40°C to 55°C

- T* = For T–rating, please refer to cable documentation.

Tools Required

- Wire cutters
- Marking pen
- Adjustable pliers
- Needle nose pliers
- Utility knife
- Large slotted screwdriver
- Molex RHT-7000 crimp tool or equivalent; 10-16AWG slot

Additional Materials Required

- Pipe Straps

Model	Pipe Size	Unit Qty.
HTPS-6	Up to 6" Outer Diameter	1 each
HTPS-10	Up to 10" Outer Diameter	1 each

- Small Pipe Adapter

  For installation on small pipes (<1" or 25mm diameter), contact Marley Engineered Products for small pipe adapter, model HTSPA-1.

- Fixing Tapes

  - HTFT-1 Fiberglass Tape: 3/8" x 66ft. roll
  - HTAT-1 Aluminum Tape: 2" x 180ft. roll

- RTV Sealant (Optional)

  The use of RTV Sealant is optional. If used, apply the original RTV Sealant. Contact Marley Engineered Products for original RTV Sealant and product information.

CAUTION

- The minimum installation temperature is -40°F (-40°C). For more convenient installation, we recommend performing the installation at a temperature above freezing. Store the kit at a temperature above freezing until installation.
- Only qualified personnel shall design and install ground fault equipment, circuit breakers, thermal insulation to cover the heating cable on the pipes, and to provide commissioning, service, operation, maintenance, and supervision.
- During installation, it's recommended to employ the appropriate personal protective equipment (PPE).
- Leave these installation instructions with the end user for future reference.

WARNING

- Marley Engineered Products heat-tracing systems must be installed correctly to ensure proper operation and to prevent shocks and fires. Pay attention to warnings and carefully follow applicable installation instructions.
- **Electrical Shock or Fire Hazard :** The installation must comply with Marley Engineered Products's requirements and adhere to the guidelines outlined in the National Electrical Code (NEC) and Canadian Electrical Code (CEC), as well as any other relevant national and local codes.
- **Ground-fault equipment protection** must be utilized on each heating cable branch circuit.
- The approvals and performance of the heat tracing systems are based exclusively on the use of Marley Engineered Products specified parts. It is imperative that parts are not substituted and commonly used electrical tape for insulation of heating cable is not recommended.
- Damaged bus wires have the potential to overheat or cause short circuits. When scoring the jacket or core, it is essential to avoid breaking the bus wire strands.
- Both components and cable ends must be kept dry before and throughout the installation process.
- The potential for bus wires to overheat or short circuit exists if the bus wire strands are broken while preparing the cable for connection. Reuse of grommets or use of the wrong grommet can result in leaks, cracked components, shocks, or fires. Ensure the type or opening size of the grommet is correct for the heating cable being installed. A new grommet is recommended whenever the cable has been pulled out of the component.
- Before and during installation or servicing, all power circuits must be de-energized.
- Read the MSDS for RTV and components carefully.
- It is recommended to use fire-resistant insulation that is compatible with the application and the maximum exposure temperature of the heat tracing system.

Specific Conditions of Use

- Marley Engineered Products MEP-HT-IESL-G & MEP-HT-IESL-R Kits must be installed using Marley Engineered Products QM-CRGX, BK-CRGX, QM-LSRX, BK-LSRX, QM-MSRX, BK-MSRX and QM-HSRX, BK-HSRX Series Heating Cables.
- To reduce the potential of an electrostatic charging hazard on the enclosures of the connection kits, clean only with a damp cloth.
- The end-user shall mount the equipment per Marley Engineered Products instructions.
- MEP-HT-IESL series shall be protected by a circuit breaker with a maximum rated current of 50 A.

Kit Contents

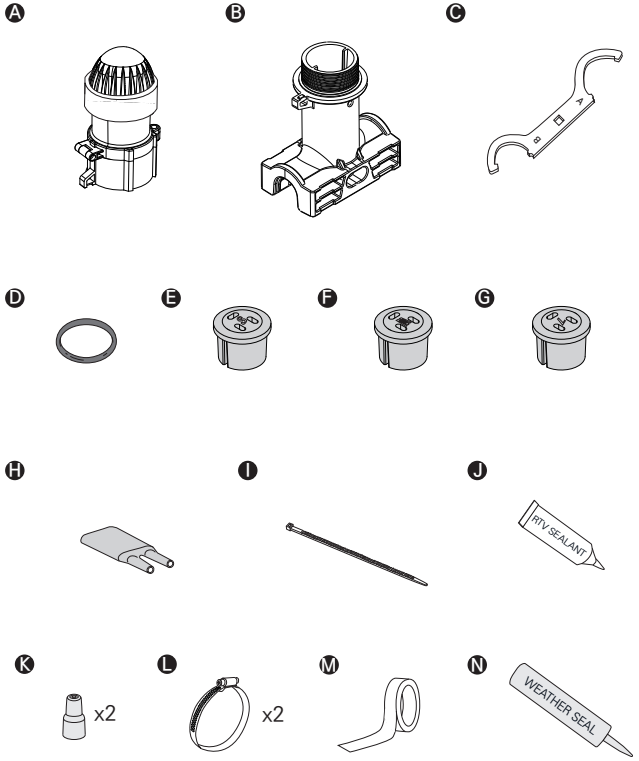

Item	Description	Qty.
A	Lighted End Cap Assembly	1
B	Pipe Stand	1
C	Wrench	1
D	Stand O-ring	1
E	S Grommet for a*-CRGX-CT, a*-LSRX-CT, a*-MSRX	1
F	M Grommet for a*-CRGX-CR, a*-LSRX-CR	1
G	L Grommet for for a*-HSRX	1
H	Core Sealer	1
I	Cable Tie	1
J	RTV Sealant (Optional)	1
K	Closed End Connector	2
L	Pipe Strap (Sold Separately)	2
M	Fixing Tape (Sold Separately)	1
N	Weather Seal (Sold Separately)	1

· a* = “QM” for QMARK, or “BK” for BERKO

1.

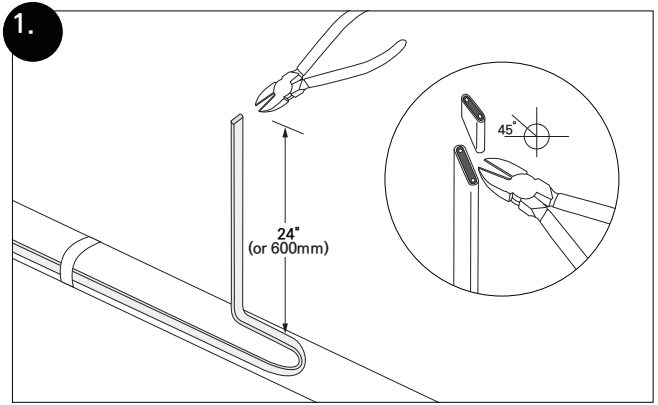
45˚
24"
(or 600mm)

2.

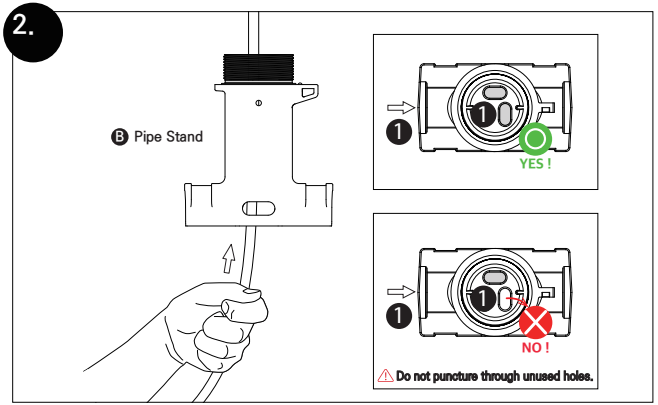
Ⓑ Pipe Stand
1
YES !
1
NO !
⚠ Do not puncture through unused holes.

3.

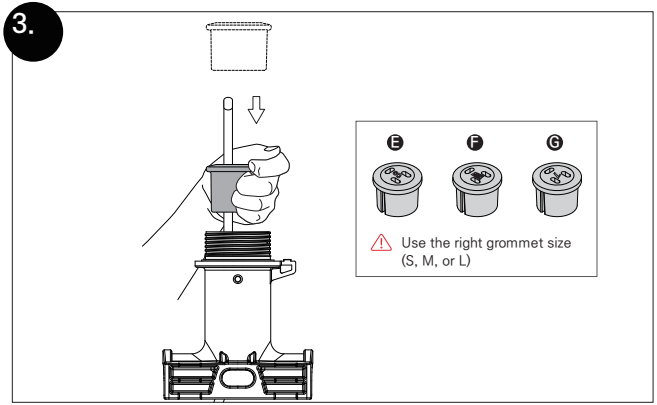
Ⓔ
Ⓕ
Ⓖ
⚠ Use the right grommet size
(S, M, or L)

4.

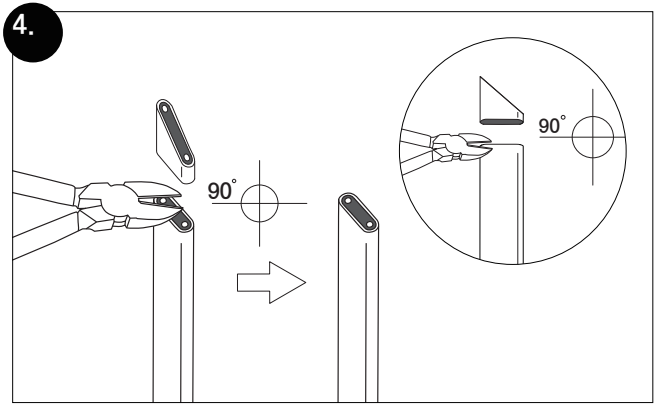
90˚
90˚

5.

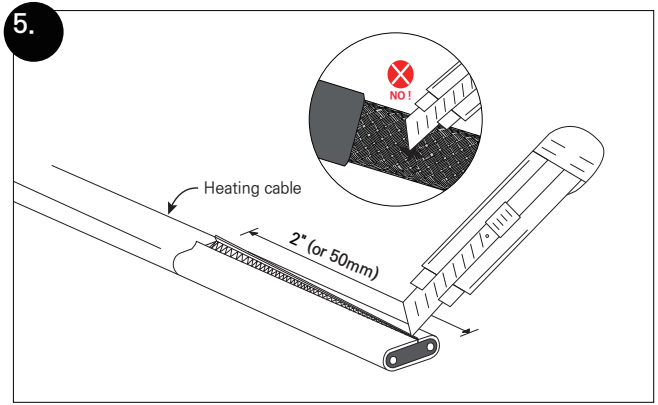

6.

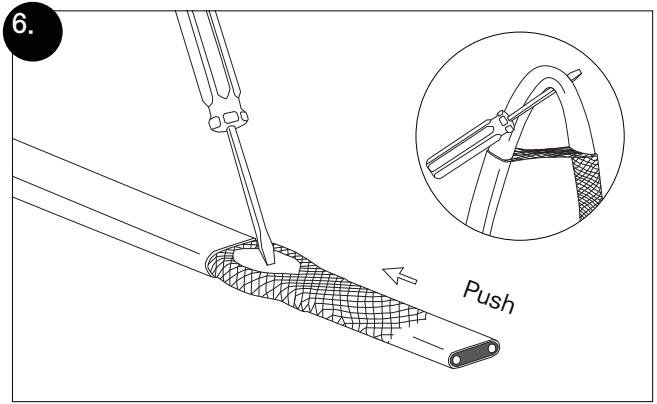

7.

Remove all exposed braid.

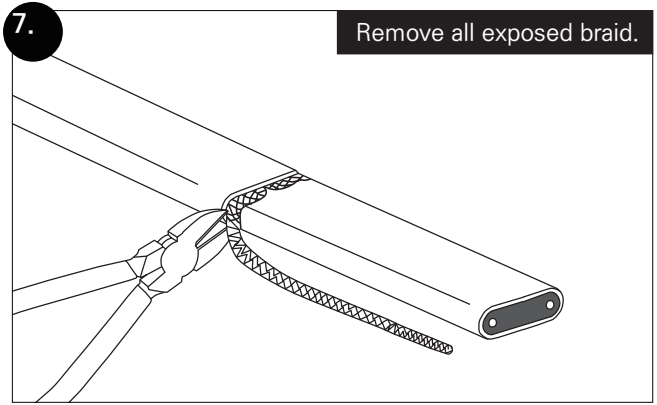

8.

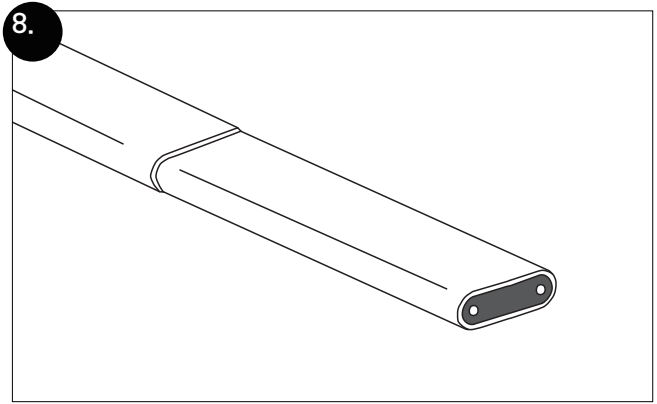

9.

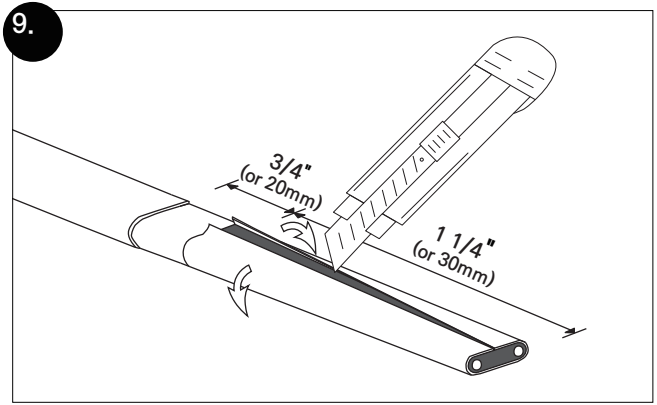

10.

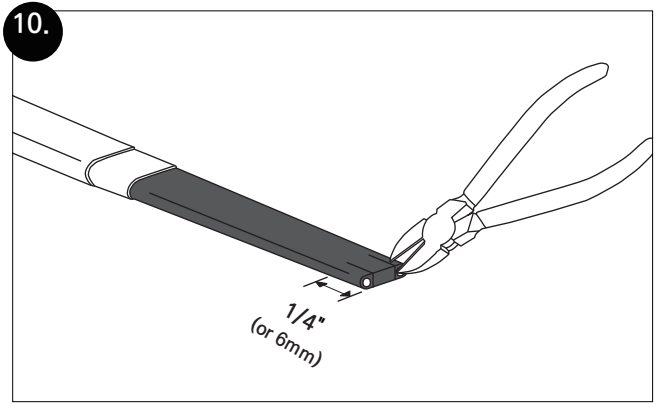

11.

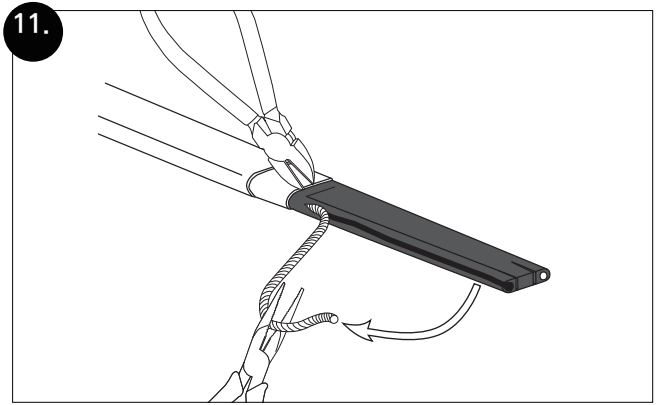

12.

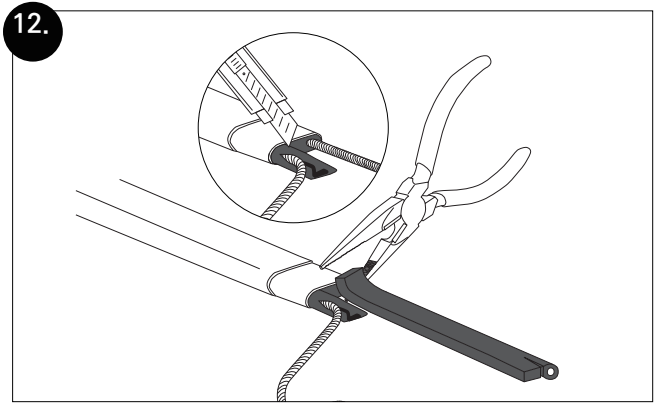

13.

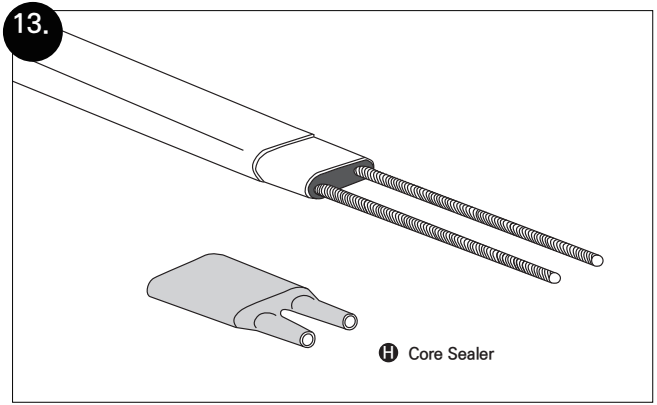

14.

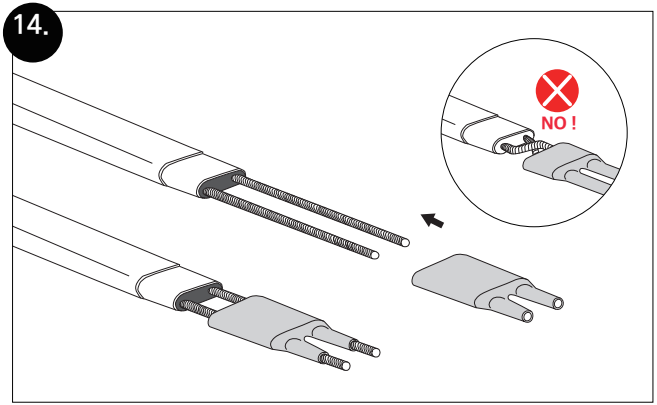

15.

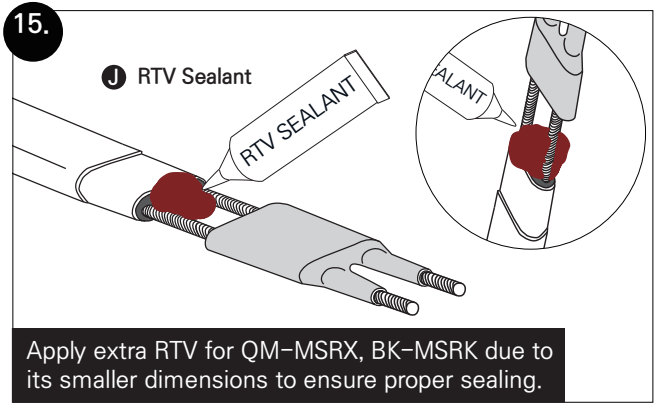

Apply extra RTV for QM-MSRX, BK-MSRK due to its smaller dimensions to ensure proper sealing.

16.

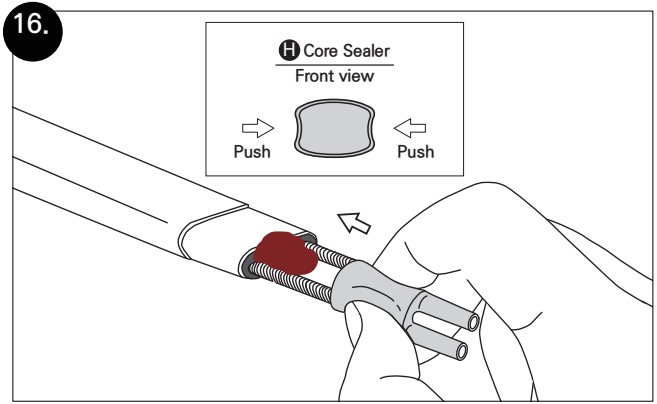

17.

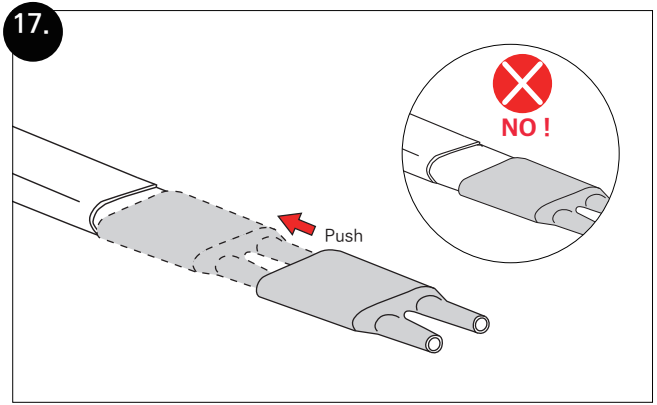

18.

NOTE : RTV adhesive should ooze out around the core sealer.

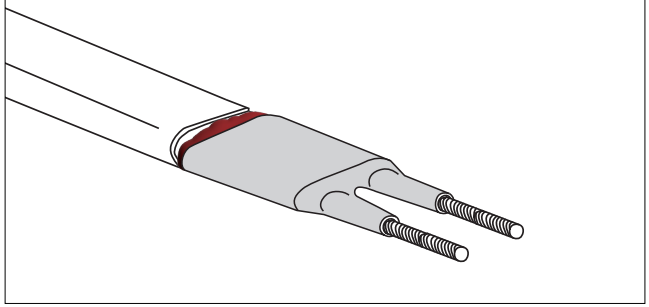

19.

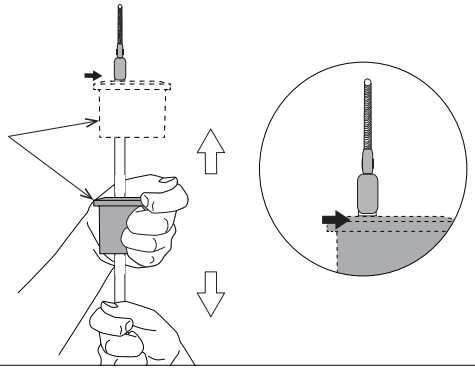

20.

Use two Pipe Straps (L) of the same size to match the pipe diameter.
Pipe straps sold separately

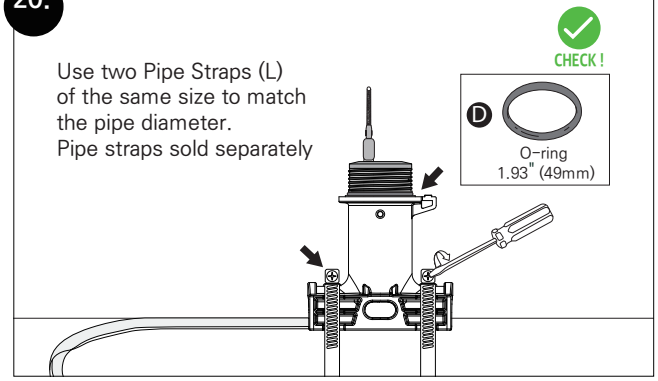

21.

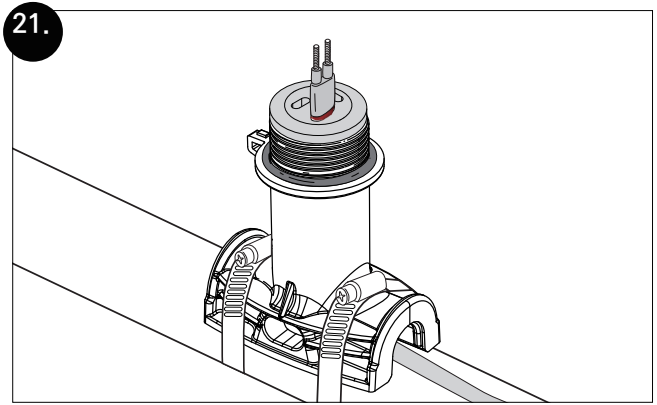

22.

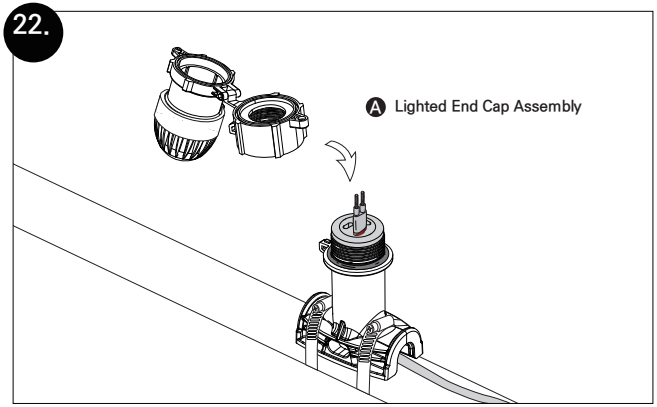
A Lighted End Cap Assembly

23.

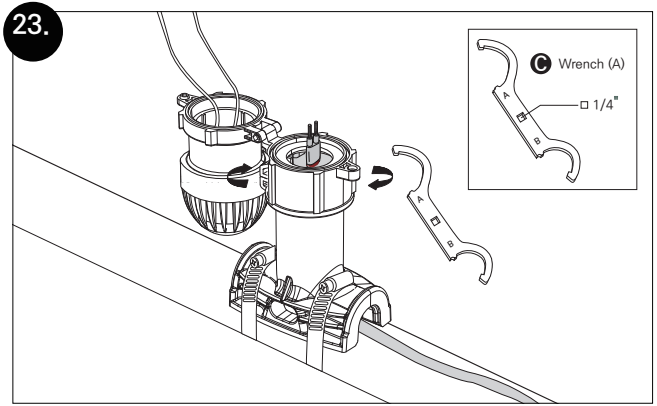
C Wrench (A)
1/4"

24.

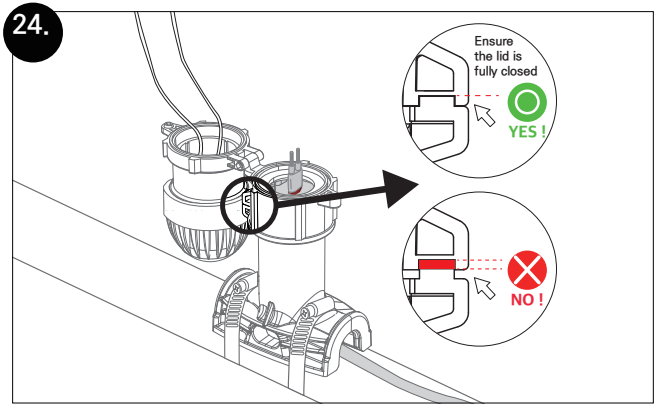
Ensure
the lid is
fully closed
YES !
NO !

25.

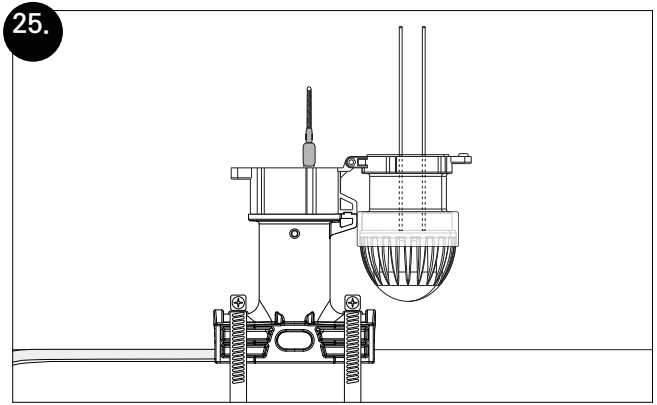

26.

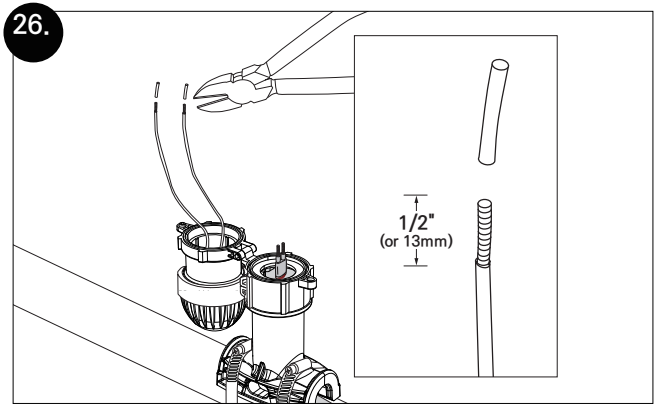

27.

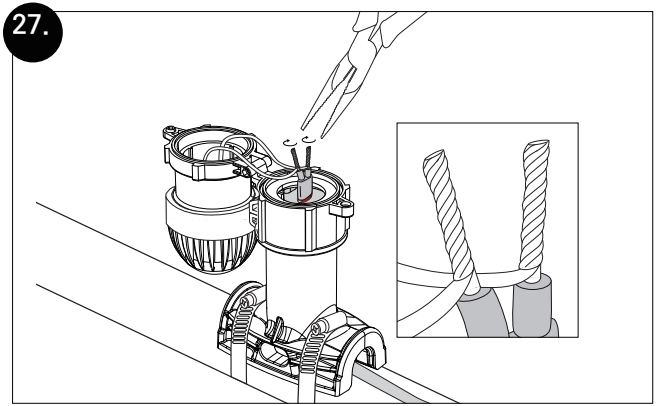

28.

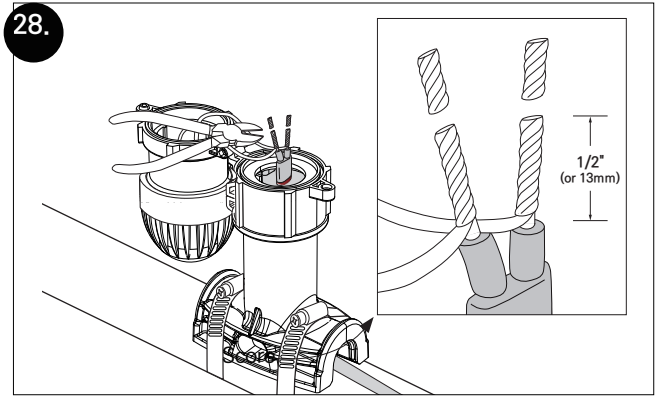

29.

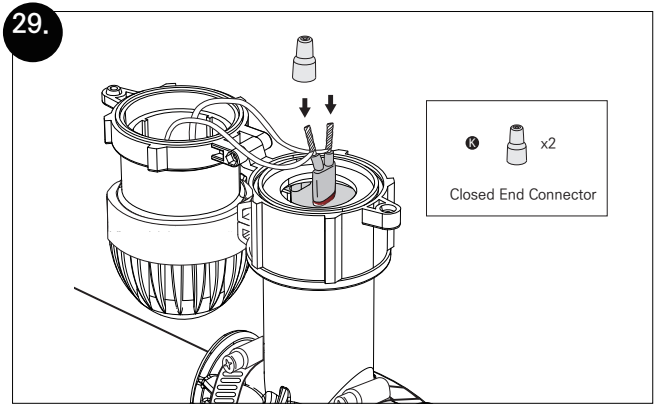
K
x2
Closed End Connector

30.

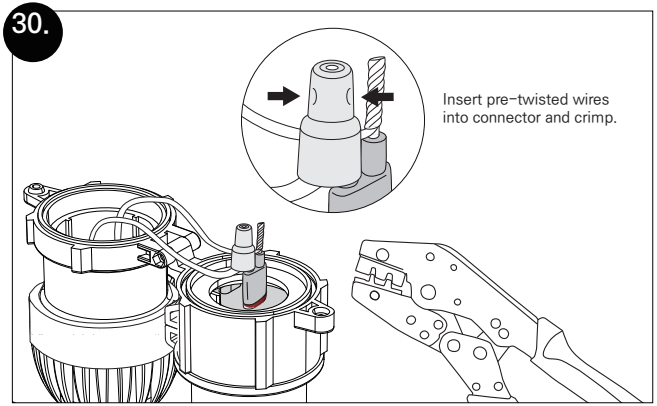
Insert pre-twisted wires
into connector and crimp.

31.

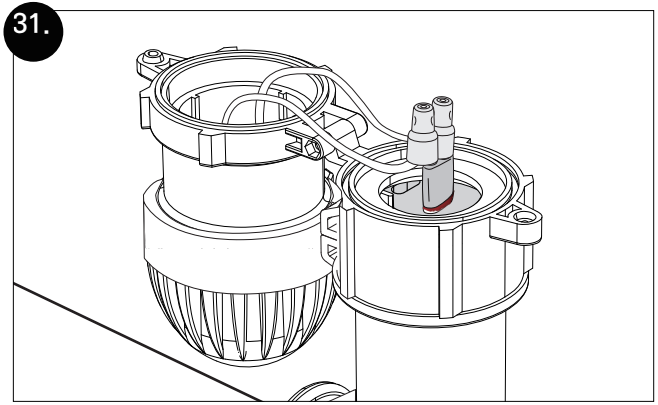

32.

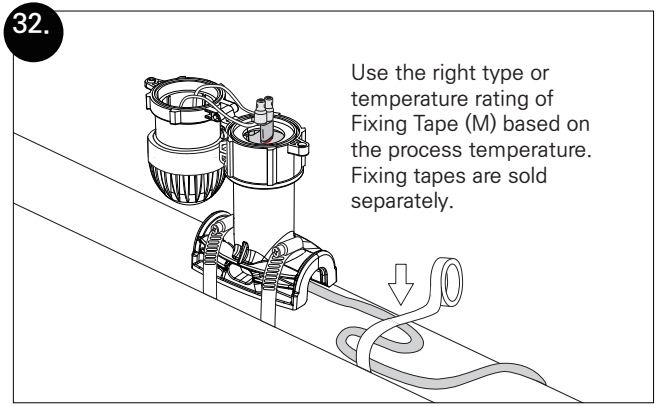
Use the right type or
temperature rating of
Fixing Tape (M) based on
the process temperature.
Fixing tapes are sold
separately.

33.

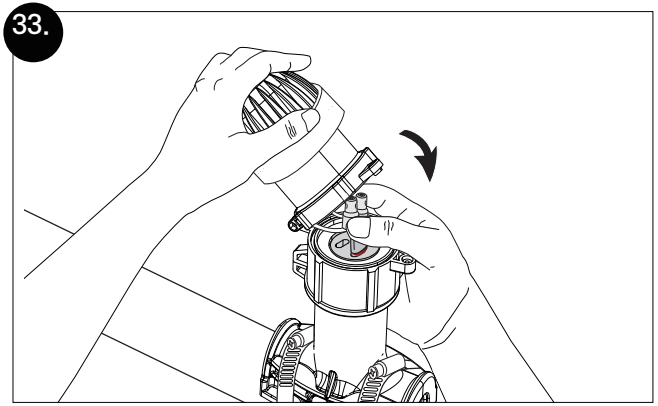

34.

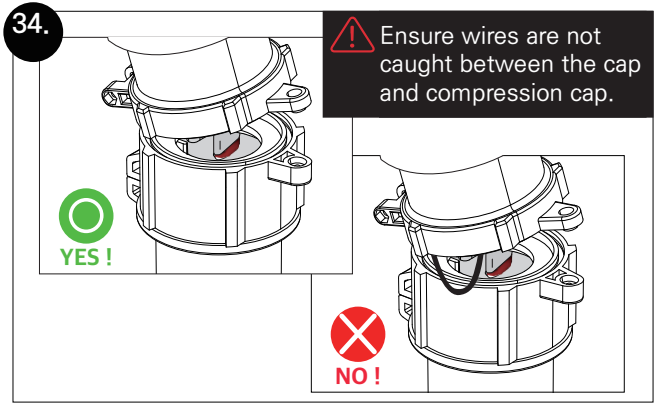
Ensure wires are not caught between the cap and compression cap.
YES !
NO !

35.

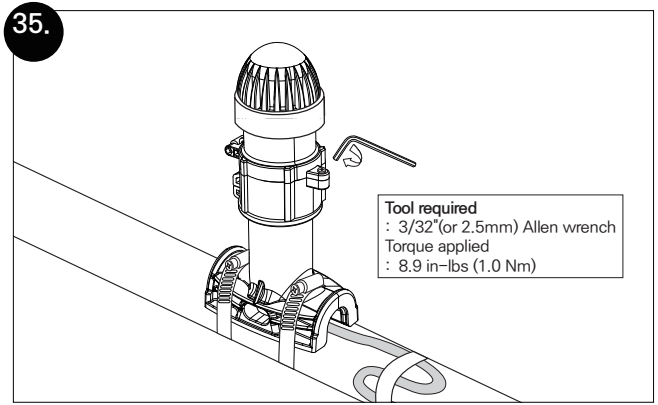
Tool required
: 3/32"(or 2.5mm) Allen wrench
Torque applied
: 8.9 in-lbs (1.0 Nm)

36.

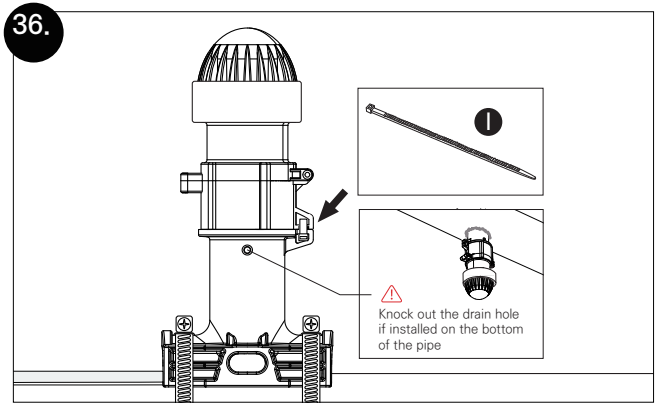
Knock out the drain hole if installed on the bottom of the pipe

37.

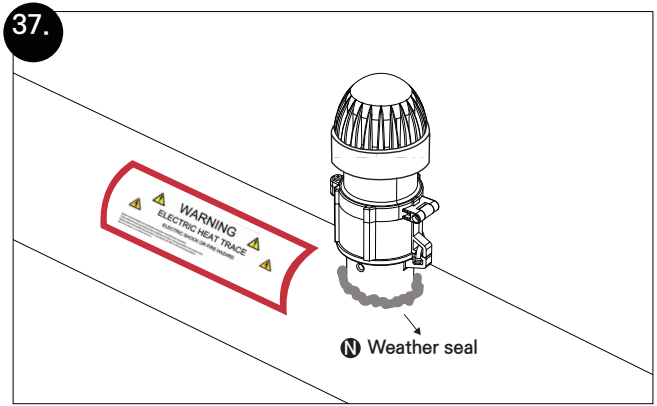



ADDRESS 425 Hanley Industrial Ct, St.Louis, MO 63144
WEB www.marleymep.com