Marley Engineered Products

# Environmental Series Air Curtains

INSTALLATION & OPERATING INSTRUCTIONS & PARTS MANUAL

## *FOR ALL 120 and 230 VOLT 1/4, 1/2 AND 3/4 H.P. MOTOR MODELS*

**READ CAREFULLY BEFORE ATTEMPTING TO ASSEMBLE, INSTALL, OPERATE, OR MAINTAIN THE PRODUCT DESCRIBED. PROTECT YOURSELF AND OTHERS BY OBSERVING ALL SAFETY INFORMATION. FAILURE TO COMPLY WITH INSTRUCTIONS COULD RESULT IN PERSONAL INJURY AND/OR PROPERTY DAMAGE! RETAIN INSTRUCTIONS FOR FUTURE REFERENCE.**

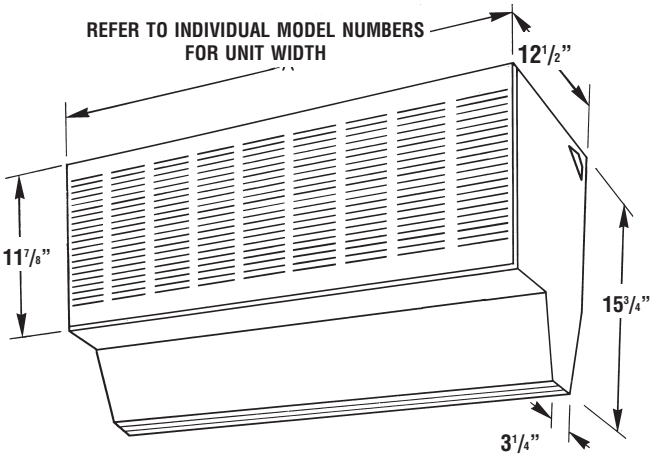


**Fig. 1**

**Dimensions - See Fig. 1**

Note that all dimensions (except width) are the same on all environmental series units. Model number indicates width of unit.
(Example: E4800 indicates a 48" wide unit.)

### *Description*

Leading Edge air curtains produce a wall of continuously flowing air that acts as a thermal barrier against outside air and flying insects. These air curtains maintain interior conditioned temperature and prevent heated or cooled air from escaping through open doorways. They reduce humidity and loss of cold air when used over freezer and cooler doors. High traffic area doors can be left open, eliminating wear and nuisance of opening and closing automatic and manual doors. Used over service entrances, receiving doors, customer entrances, access doors, etc. ... air curtains provide protection against insects, dust, odor, fumes and other contaminant's.

### *Unpacking*

**NOTE - AFTER UNPACKING UNIT, INSPECT CAREFULLY FOR ANY DAMAGE THAT MAY HAVE OCCURRED DURING TRANSIT. CHECK FOR LOOSE, MISSING OR DAMAGED PARTS.**

1. With packaged unit on the floor, carton arrows should point upward.
2. Carefully remove staples from top of carton and fold back sides.
3. Carefully remove cabinet from carton by lifting out unit using straps provided.

### *Specifications and Performance*

| HP | MAX. RPM | MAX. MOTOR WATTS | 120V, 60HZ MAX. AMPS | 230V, 60HZ MAX. AMPS | MAX. FT. PER MIN. AT NOZZLE | AVG. CFM AT NOZZLE FOR MOTOR SHOWN IN VARIOUS CABINET SIZES | | | | |
|---|---|---|---|---|---|---|---|---|---|---|
| | | | | | | 36" | 38" | 42" | 48" | 60"*†† |
| 1/4 | 1100 | 125 | 3.4 | .7 | 2500 | 1620 | 1670 | 1795 | 2000 | 2880†† |
| 1/2 | 1745 | 480 | 5.2 | 2.2 | 3800 | 2460 | 2535 | 2730 | 3040 | 4375†† |
| 3/4 | 1700 | 750 | 7.8 | 2.6 | 4850 | 3140 | 3240 | 3480 | 3880 | 4580 |

†† **Two motor unit.**

## *Unpacking (Continued)*

**CAUTION: Do not attempt to lift this air curtain by its louver or damage may result.**

4. Unscrew six (6) knurled nuts and remove air intake grille. (See Figure 2.)

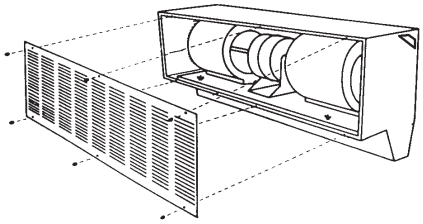

**Figure 2 - Removing Air Intake Grille**

5. Carefully disconnect motor power cord and plug assembly and remove the two wing nuts on motor/blower base. (See Figure 3.)

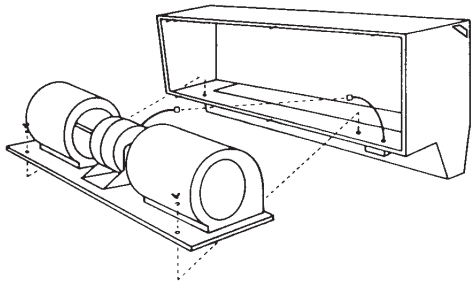

**Figure 3 - Removing Motor/Blower Assembly**

6. To remove motor/blower assembly, lift from rear of motor housing to prevent possible damage and misalignment to shaft and blower wheels.

## IMPORTANT SAFETY INSTRUCTIONS
## "READ AND SAVE THESE INSTRUCTIONS"

**WARNING - TO REDUCE THE RISK OF FIRE, ELECTRIC SHOCK, OR INJURY TO PERSONS OBSERVE THE FOLLOWING:**

1. Use this unit only in the manner intended by the manufacturer. If you have questions contact the manufacturer. (See page 8)
2. Installation work and electrical wiring must be done by qualified persons in accordance with applicable codes and standards included fire rated construction. All wiring to unit must be copper and in accordance with the National Electrical Code (NEC), all applicable codes and ordinances, and all sections of this manual.
3. Do not use this unit with any solid state speed control.
4. Before installing, servicing, or cleaning unit, switch power off at service panel and lock and tag service disconnect means to prevent possible electric shock if power is accidentally switched on

**WARNING: DO NOT DEPEND UPON A THERMOSTAT OR OTHER SWITCH AS THE SOLE MEANS OF DISCONNECTING POWER TO UNIT. ALWAYS DISCONNECT POWER AT MAIN SERVICE PANEL.**

**NOTE: THIS UNIT IS PROVIDED WITH AN AUTO-RESETTING THERMAL OVERLOAD PROTECTOR THAT COULD INADVERTENTLY RESET DURING SERVICING AND CREATE A HAZARD. ALWAYS DISCONNECT POWER TO UNIT AT SERVICE PANEL BEFORE REMOVING COVER FOR ANY CLEANING OR SERVICING.**

5. When cutting or drilling into wall or ceiling, do not damage electrical wiring or other hidden utilities.
6. Make certain the power source conforms to the electrical requirements of the unit. Always check unit nameplate and check actual voltage with meter.
7. To prevent a possible electric shock hazard for units with multiple sections, special care must be given to make sure each section is properly bonded together with the grounding conductors provided.
8. This unit must be installed at a minimum of 7 ft (2.1 m) above the floor.
9. Do not insert fingers or any foreign objects into the intake or exhaust openings and for proper operation, do not block airflow to unit
10. This unit is not suitable for use in any hazardous or corrosive locations where flammable, explosive, chemical laden, or wet atmospheres are present.
11. Do not attach ductwork to this unit. Such use may create unsafe conditions and would void the warranty.
12. This unit is suitable for commercial and/or industrial use only.
13. If unit is to be used in freezer or cooler applications, unit must be mounted on the exterior (warm side) of freezer or cooler.
14. Hardware and mounting means must be suitable to support the unit and must be tested to confirm it will safely support a minimum of 150 lbs.

## *Installation*

1. Determine desired mounting location and using template provided mark and drill holes for mounting unit using appropriate hardware (not included).

**NOTE: SEE WARNINGS AND MOUNTING LIMITATIONS.**

2. Mount cabinet onto wall and securely tighten hardware.
3. Reinstall motor/blower assembly into cabinet and secure by replacing the wing nuts.
4. If multiple cabinet sections are used, attach the grounding wires as required to properly bond the units.
5. Reconnect the motor/blower electrical cord assembly.

**ELECTRICAL CONNECTIONS:**
**WARNING: ALL AIR CURTAINS SHOULD BE INSTALLED BY QUALIFIED PERSONNEL.**
**WARNING: THIS FAN HAS AN INTERNAL SELF-RESETTING THERMAL OVERLOAD PROTECTOR. ALWAYS DISCONNECT FROM POWER SUPPLY BEFORE SERVICING.**

1. Connect motor per name plate to correct power supply. Use adequate size wire for all branch and feeder runs.
2. Install all wiring, protection and grounding in accordance with the National Electrical Code (NEC) and all local requirements.
3. Remove two (2) screws holding the Outlet Box Assembly in place. See Fig. 5. Keep these screws. It will be required to re-install the assembly in step 6.
4. Remove the Outlet Box Assembly to expose knockouts for power supply wiring. Remove assembly by unlatching the bottom of the assembly from the back of the cabinet. Put assembly aside for now to make supply connections. Label on blower indicates voltage connection of motor from factory. Compare with voltage on nameplate and make sure the power supply to the disconnect that will feed the unit are the same voltage.
5. Run wires from power supply disconnect to the outlet box. Choose which knockout to use either from the back of the cabinet or from the top of the cabinet. Use appropriate wiring according to local code. Use a flexible connector to allow for possible angle adjustments if necessary.
6. Connect wires with wire nuts (not included). Refer to Wiring Diagram, Figure 6 and Figure 5. Connect black supply lead to center terminal of rocker switch, white supply (neutral) lead to white for 120 volt units. For 220 volt units, L2 will connect to white lead with black tape. Connect green grounding lead to green grounded conductor to supply circuit. Connect black and red leads to rocker switch as shown in Figure 5. No loose strands or loose connections should be present.
7. Re-install outlet box assembly by latching the bottom first and by using the two screws removed in step 3. Make sure no wire will be pinched between the outlet box and the cabinet back wall, or between the cabinet top and the cabinet right side panel. Make sure all connections are tight.
8. From the outside of the cabinet on the top right corner, remove three (3) screws. Refer to Fig. 5. Keep these screws. It will be needed to replace the outlet box cover. Carefully remove outlet box cover with the rocker switch attached to it. Pull out of the cabinet only as far as the length of the wires will allow. Inspect all wires and make sure all connections are tight and the ground wires are properly connected. Replace outlet box cover. Make sure all wires are pushed inside the compartment. Pre-seclect rocker switch postition to high or low speed. See Operation Section for proper setting instructions.
9. Unit is ready for operation. Restore power to the unit.
10. Upon completion of all installations, inspect unit for excessive vibration during operation. If excessive vibration is noticeable, disconnect power supply, inspect mounting installation, and refer to troubleshooting chart for probable cause.
11. Replace intake grille with louvers facing down and refasten knurled nuts.

**AIR CURTAIN CONTROL**

1. On/Off Control by hand – A three pole On/Off switch may be used or the Supply Disconnect Switch may also be used to put the unit on or off. A magnetic motor starter is not required with manual On/Off control.
2. When automatic On/Off function is required, a Motor Control Panel must be used. The Motor Control Panel can be such that a micro switch may control the On/Off function of the Panel. The micro switch may be any dry contact switch or a thermostat. The panel may be chosen such that the opening and closing of a door may control the closing and opening of a single pole contact of a door switch which in turn controls the On/Off of the contactor in the Control Panel which will turn the Air Curtain motors on and off.
3. These controls are all optional devices that are external of the Air Curtain. These can be installed between the Air Curtain and its Disconnect.
4. It is recommended all control devices to be used with these Air Curtain units should be UL and or CSA approved devices and all local codes be followed in their use and installation.

**CAUTION: MAKE SURE AMP RATING OF ANY CONTROL DEVICE OR ON/OFF SWITCH EXCEEDS NAMEPLATE AMP RATING OF MOTOR.**

**WARNING: ALWAYS DISCONNECT FROM POWER SUPPLY BEFORE SERVICING. DO NOT DEPEND ON THE ROCKER SWITCH TO TURN UNIT OFF WHEN SERVICING THE UNIT.**

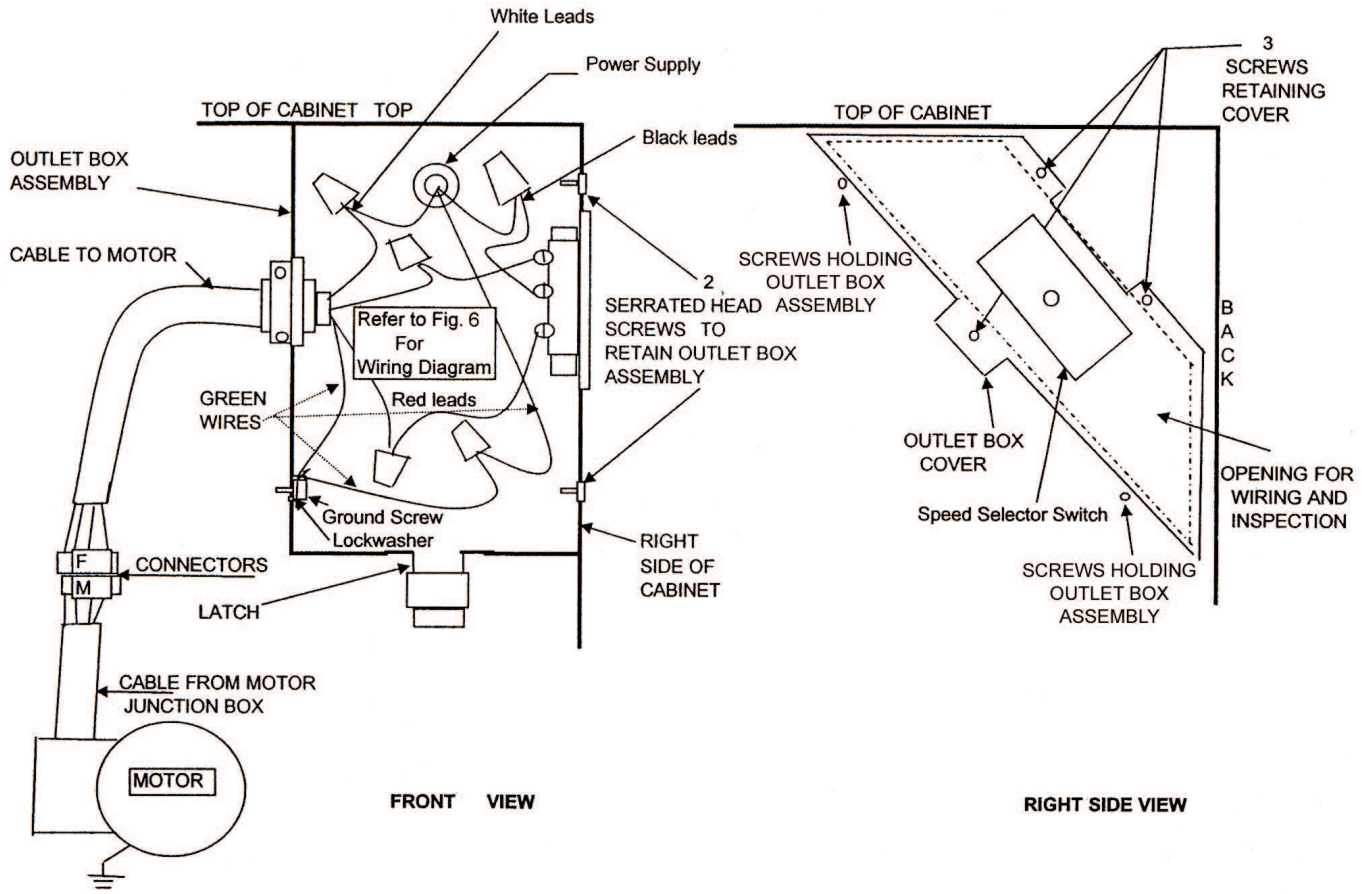


**FIGURE 5**
**OUTLET BOX FIELD WIRING**
**(120 V Single Phase Unit with Rocker Type Selector Switch Shown)**

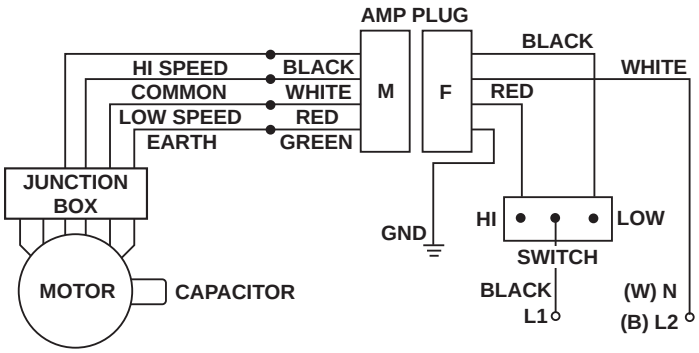


**Above for 1/4, 1/2 and 3/4 HP 120 volt motors and 1/2 and 3/4 HP 230 volt motors.**

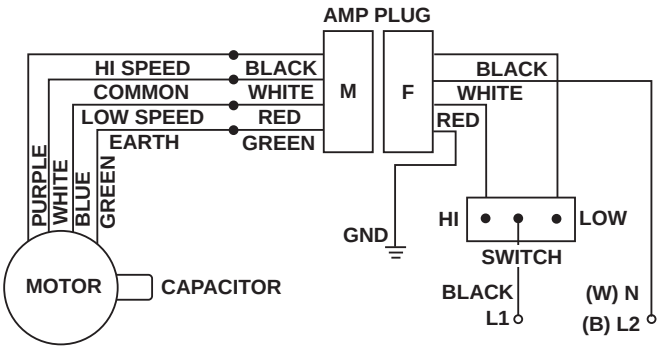


**Above for 1/4 HP 230 volt motor.**

**Figure 6**

## *Operation*

1. After power has been connected to unit, fans will start in either preset (high/low) speed selection.
2. Air velocity is controlled by selection of high or low speed indicator. This feature allows the setting of air velocity to individual desired performance and energy efficiency.
3. Air direction at outlet can be controlled by adjustable vanes at the nozzle which compensates for possible draft conditions.

NOTE: Air direction settings are shown in Figures 7, 8, and 9.

NOTE: Cold air will try to escape near floor level. Warm air will try to penetrate curtain near top of doorway. Air flow can be controlled by direction of nozzle louvers and by high/low settings.

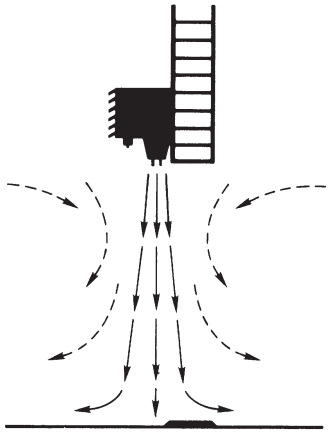

**Figure 7 - Desired Air Flow Adjustment for Temperature and Humidity Control.**

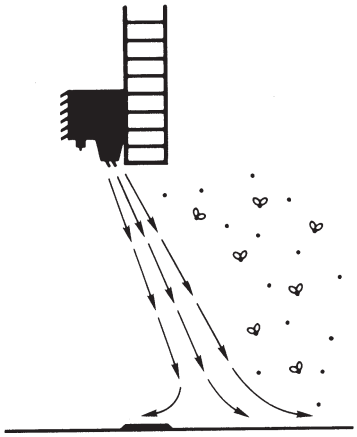

**Figure 8 - Desired Air Flow Adjustment for Insect and Dust Control.**

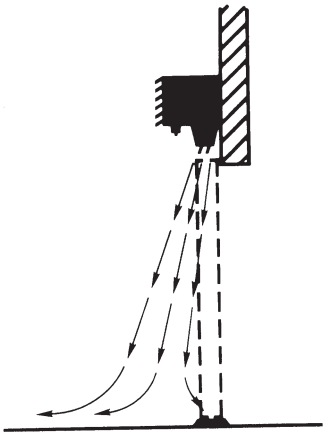

**Figure 9 - Desired Air Flow Adjustment for Freezer and Cooler Applications.**

## *Maintenance*

**WARNING: ALWAYS DISCONNECT POWER SUPPLY BEFORE SERVICING.**

**LUBRICATION**

Ball bearings are permanently lubricated and require no further lubrication.

**CLEANING**

1. The air door cabinet may be wiped off with a damp cloth. Do not allow motor to get wet. Do not use solvents or harsh detergents.

NOTE: Keep air intake louvers clear of dirt and dust accumulation which could affect performance.

2. Check blower wheels for accumulated dirt twice a year and clean. If disassembly is required, see GENERAL SERVICING section.

**GENERAL SERVICING**

**WARNING: IF SERVICING IS REQUIRED, IT SHOULD BE DONE BY QUALIFIED PERSONS ONLY.**

**WARNING: ALWAYS DISCONNECT POWER SUPPLY BEFORE SERVICING.**

1. Remove motor/blower assembly. All motor/blower assemblies are designed for easy removal and service with wing nuts and quick disconnect electrical connections.
2. Place motor/blower assembly on workbench.
3. To replace blower wheel, remove the three slotted hex head screws on outer blower ring assembly (See Figure 10 & 11, Replacement Parts Illustration.) The wheel is held onto shaft by one hex head screws.

IMPORTANT: NOTE POSITION OF WHEELS TO PREVENT RUBBING WHEN REPLACED.

4. To remove motor:
   a. Remove blower wheels. (See Step 3 above.)
   b. Remove blower scroll (six hex head screws).
   c. Unscrew and remove motor mounts.
5. Replace motor/blower assembly.

## *Troubleshooting Chart*

| SYMPTOM | POSSIBLE CAUSE(S) | CORRECTIVE ACTION |
|---|---|---|
| Fan inoperative | 1. Blown fuse or open circuit breaker.<br>2. Electricity turned off.<br>3. Loose cord connection.<br>4. Defective capacitor or motor. | 1. Replace fuse or reset circuit breaker.<br>2. Contact local power company.<br>3. Re-check all connections.<br>4. Replace. |
| Excessive noise | 1. Wheel rubbing on housing.<br>2. Motor base or blower not securely anchored.<br>3. Defective motor bearings. | 1. Center wheel.<br>2. Tighten mounting bolts.<br>3. Replace motor. |
| Insufficient air flow | 1. Improper voltage.<br>2. Outlet louvers closed.<br>3. Intakes obstructed.<br>4. Motor speed setting on low.<br>5. Dirty blower wheels | 1. Reconnect to proper voltage.<br>2. Open.<br>3. Remove any obstruction.<br>4. Position toggle switch to high.<br>5. Clean. |
| Too much air flow | 1. Motor speed setting on high. | 1. Position toggle switch to low. |
| Fans cut out on thermal overload (self-resets) | 1. Low voltage.<br>2. Obstruction to blower wheel. | 1. Verify correct wire size.<br>2. Remove obstruction. |

## Replacement Parts For Air Curtain Cabinets

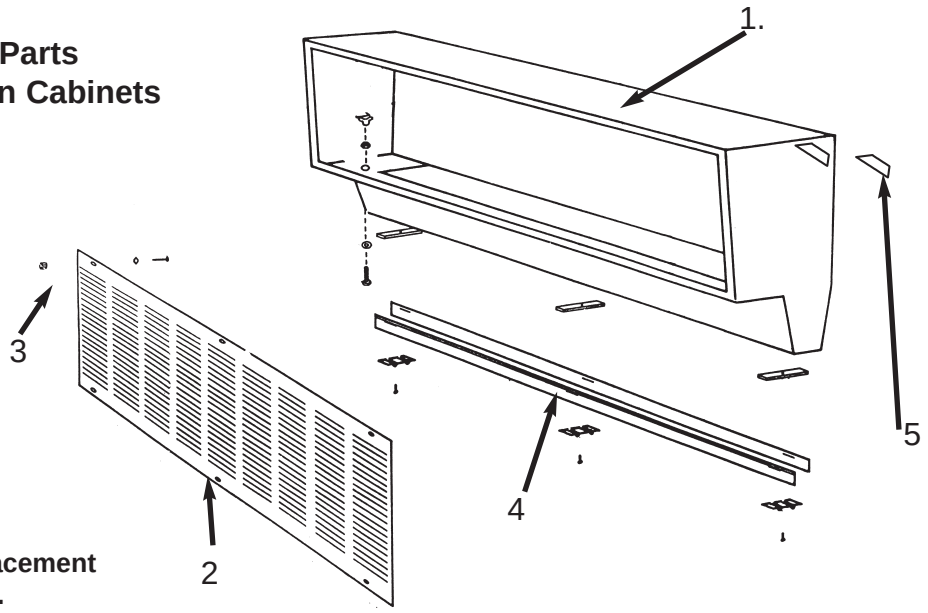


**Figure 10 - Replacement Parts Illustration.**

### *Replacement Parts List For Air Curtain Cabinets*

| Key No. | Description | Part Numbers for Cabinets (length) | | | | |
|---|---|---|---|---|---|---|
| | | 36" | 38" | 42" | 48" | 60" |
| 1 | Cabinet box assembly | 1016-0096-000 | 1016-0096-001 | 1016-0096-002 | 1016-0096-003 | 1016-0096-004 |
| 2 | Air Intake Grille | 1016-0093-000 | 1016-0093-001 | 1016-0093-002 | 1016-0093-003 | 1016-0093-004 |
| 3 | Cabinet Intake grill knurled nut | AP0002 | AP0002 | AP0002 | AP0002 | AP0002 |
| 4 | Cabinet louver kit | ACL36 | ACL38 | ACL42 | ACL48 | ACL60 |
| 5 | Electric box cover | 1402-2364-002 | 1402-2364-002 | 1402-2364-002 | 1402-2364-002 | 1402-2364-002 |

### *Replacement Parts For Motor Blower Assemblies (6)*

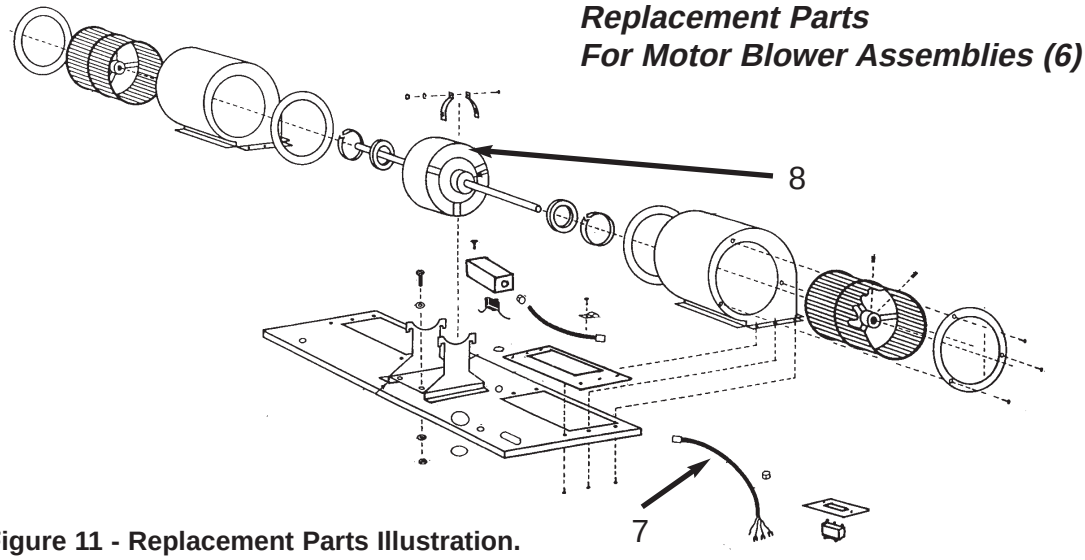


**Figure 11 - Replacement Parts Illustration.**

### *Replacement Parts For Air Curtain Cabinets*

| Key No. | Description | Part Numbers for Motor Blower Assemblies | | | | | |
|---|---|---|---|---|---|---|---|
| | | 1/4HP | | 1/2HP | | 3/4HP | |
| | | 120V | 230V | 120V | 230V | 120V | 230V |
| 6 | Motor/Blower Assembly | ACMB125 | ACMB225 | ACMB150 | ACMB250 | ACMB175 | ACMB275 |
| 7 | Cord, female connector | ACWS616 | ACWS616 | ACWS616 | | ACWS616 | |
| 8 | Motor Assembly | ACM1025 | ACM2025 | 3900-2072-000 | | 3900-2073-000 | |

## LIMITED WARRANTY

All products manufactured by Marley Engineered Products are warranted against defects in workmanship and materials for five years from date of installation. This warranty does not apply to damage from accident, misuse, or alteration; nor where the connected voltage is more than 5% above the nameplate voltage; nor to equipment improperly installed or wired or maintained in violation of the product's installation instructions. All claims for warranty work must be accompanied by proof of the date of installation.

The customer shall be responsible for all costs incurred in the removal or reinstallation of products, including labor costs, and shipping costs incurred to return products to Marley Engineered Products Service Center. Within the limitations of this warranty, inoperative units should be returned to the nearest Marley authorized service center or the Marley Engineered Products Service Center, and we will repair or replace, at our option, at no charge to you with return freight paid by Marley. It is agreed that such repair or replacement is the exclusive remedy available from Marley Engineered Products.

THE ABOVE WARRANTIES ARE IN LIEU OF ALL OTHER WARRANTIES EXPRESSED OR IMPLIED, AND ALL IMPLIED WARRANTIES OF MERCHANTABILITY AND FITNESS FOR A PARTICULAR PURPOSE WHICH EXCEED THE AFORESAID EXPRESSED WARRANTIES ARE HEREBY DISCLAIMED AND EXCLUDED FROM THIS AGREEMENT. MARLEY ENGINEERED PRODUCTS SHALL NOT BE LIABLE FOR CONSEQUENTIAL DAMAGES ARISING WITH RESPECT TO THE PRODUCT, WHETHER BASED UPON NEGLIGENCE, TORT, STRICT LIABILITY, OR CONTRACT.

Some states do not allow the exclusion or limitation of incidental or consequential damages, so the above exclusion or limitation may not apply to you. This warranty gives you specific legal rights, and you may also have other rights which vary from state to state.

For the address of your nearest authorized service center, contact Marley Engineered Products in Bennettsville, SC, at 1-800-642-4328. Merchandise returned to the factory must be accompanied by a return authorization and service identification tag, both available from Marley Engineered Products. When requesting return authorization, include all catalog numbers shown on the products.

**HOW TO OBTAIN WARRANTY SERVICE AND WARRANTY PARTS PLUS GENERAL INFORMATION**

1. Warranty Service or Parts **1-800-642-4328**
2. Purchase Replacement Parts **1-800-654-3545**
3. General Product Information **www.marleymep.com**

**Note:** When obtaining service always have the following:

1. Model number of the product
2. Date of manufacture
3. Part number or description

Marley Engineered Products

**470 Beauty Spot Rd. East**
**Bennettsville, SC 29512 USA**

ECR 36787

Part No. 5200-2409-002 11/07